TYPE CODE

- Throughout this manual, the following abbreviations are used to identify individual model.

SH300/SH300A

CODE	AREA TYPE
ED	EUROPEAN DIRECT SALES
E	U.K.
F	France

SH300II/AII

CODE	AREA TYPE
E	U.K.
F	France

SH300III/AIII

CODE	AREA TYPE
ED	EUROPEAN DIRECT SALES

A Few Words About Safety

Service Information

The service and repair information contained in this manual is intended for use by qualified, professional technicians.
Attempting service or repairs without the proper training, tools, and equipment could cause injury to you or others. It could also damage the vehicle or create an unsafe condition.

This manual describes the proper methods and procedures for performing service, maintenance, and repairs. Some procedures require the use of specially designed tools and dedicated equipment. Any person who intends to use a replacement part, service procedure or a tool that is not recommended by Honda, must determine the risks to their personal safety and the safe operation of the vehicle.

If you need to replace a part, use genuine Honda parts with the correct part number or an equivalent part. We strongly recommend that you do not use replacement parts of inferior quality.

For Your Customer's Safety

Proper service and maintenance are essential to the customer's safety and the reliability of the vehicle. Any error or oversight while servicing a vehicle can result in faulty operation, damage to the vehicle, or injury to others.

⚠ WARNING

Improper service or repairs can create an unsafe condition that can cause your customer or others to be seriously hurt or killed.

Follow the procedures and precautions in this manual and other service materials carefully.

For Your Safety

Because this manual is intended for the professional service technician, we do not provide warnings about many basic shop safety practices (e.g., Hot parts–wear gloves). If you have not received shop safety training or do not feel confident about your knowledge of safe servicing practice, we recommended that you do not attempt to perform the procedures described in this manual.

Some of the most important general service safety precautions are given below. However, we cannot warn you of every conceivable hazard that can arise in performing service and repair procedures. Only you can decide whether or not you should perform a given task.

⚠ WARNING

Failure to properly follow instructions and precautions can cause you to be seriously hurt or killed.

Follow the procedures and precautions in this manual carefully.

Important Safety Precautions

Make sure you have a clear understanding of all basic shop safety practices and that you are wearing appropriate clothing and using safety equipment. When performing any service task, be especially careful of the following:

- Read all of the instructions before you begin, and make sure you have the tools, the replacement or repair parts, and the skills required to perform the tasks safely and completely.
- Protect your eyes by using proper safety glasses, goggles or face shields any time you hammer, drill, grind, pry or work around pressurized air or liquids, and springs or other stored-energy components. If there is any doubt, put on eye protection.
- Use other protective wear when necessary, for example gloves or safety shoes. Handling hot or sharp parts can cause severe burns or cuts. Before you grab something that looks like it can hurt you, stop and put on gloves.
- Protect yourself and others whenever you have the vehicle up in the air. Any time you lift the vehicle, either with a hoist or a jack, make sure that it is always securely supported. Use jack stands.

Make sure the engine is off before you begin any servicing procedures, unless the instruction tells you to do otherwise.
This will help eliminate several potential hazards:

- Carbon monoxide poisoning from engine exhaust. Be sure there is adequate ventilation whenever you run the engine.
- Burns from hot parts or coolant. Let the engine and exhaust system cool before working in those areas.
- Injury from moving parts. If the instruction tells you to run the engine, be sure your hands, fingers and clothing are out of the way.

Gasoline vapors and hydrogen gases from batteries are explosive. To reduce the possibility of a fire or explosion, be careful when working around gasoline or batteries.

- Use only a nonflammable solvent, not gasoline, to clean parts.
- Never drain or store gasoline in an open container.
- Keep all cigarettes, sparks and flames away from the battery and all fuel-related parts.

HOW TO USE THIS MANUAL

This service manual describes the service procedures for the SH300/II/III/A/AII/AIII.

Follow the Maintenance Schedule (Section 4) recommendations to ensure that the vehicle is in peak operating condition.

Performing the first scheduled maintenance is very important. It compensates for the initial wear that occurs during the break-in period.

Sections 1 and 4 apply to the whole scooter. Section 3 illustrates procedures for removal/installation of components that may be required to perform service described in the following sections.
Section 5 through 22 describe parts of the scooter, grouped according to location.

Find the section you want on this page, then turn to the table of contents on the first page of the section.

Most sections start with an assembly or system illustration, service information and troubleshooting for the section. The subsequent pages give detailed procedures.

If you are not familiar with this scooter, read Technical Feature in Section 2.

If you don't know the source of the trouble, go to section 24 Troubleshooting.

Your safety, and the safety of others, is very important. To help you make informed decisions we have provided safety messages and other information throughout this manual. Of course, it is not practical or possible to warn you about all the hazards associated with servicing this vehicle.
You must use your own good judgement.
You will find important safety information in a variety of forms including:

- Safety Labels – on the vehicle
- Safety Messages – preceded by a safety alert symbol ⚠ and one of three signal words, DANGER, WARNING, or CAUTION.
  These signal words mean:

⚠DANGER You WILL be KILLED or SERIOUSLY HURT if you don't follow instructions.

⚠WARNING You CAN be KILLED or SERIOUSLY HURT if you don't follow instructions.

⚠CAUTION You CAN be HURT if you don't follow instructions.

- Instructions – how to service this vehicle correctly and safely.

As you read this manual, you will find information that is preceded by a **NOTICE** symbol. The purpose of this message is to help prevent damage to your vehicle, other property, or the environment.

ALL INFORMATION, ILLUSTRATIONS, DIRECTIONS AND SPECIFICATIONS INCLUDED IN THIS PUBLICATION ARE BASED ON THE LATEST PRODUCT INFORMATION AVAILABLE AT THE TIME OF APPROVAL FOR PRINTING. Honda Motor Co., Ltd. RESERVES THE RIGHT TO MAKE CHANGES AT ANY TIME WITHOUT NOTICE AND WITHOUT INCURRING ANY OBLIGATION WHATSOEVER. NO PART OF THIS PUBLICATION MAY BE REPRODUCED WITHOUT WRITTEN PERMISSION. THIS MANUAL IS WRITTEN FOR PERSONS WHO HAVE ACQUIRED BASIC KNOWLEDGE OF MAINTENANCE ON Honda MOTORCYCLES, MOTOR SCOOTERS OR ATVS.

Honda Motor Co., Ltd.
SERVICE PUBLICATION OFFICE

CONTENTS

	GENERAL INFORMATION	1
	TECHNICAL FEATURE	2
	FRAME/BODY PANELS/EXHAUST SYSTEM	3
	MAINTENANCE	4
ENGINE AND DRIVE TRAIN	LUBRICATION SYSTEM	5
	FUEL SYSTEM (PGM-FI)	6
	COOLING SYSTEM	7
	ENGINE REMOVAL/INSTALLATION	8
	CYLINDER HEAD/VALVES	9
	CYLINDER/PISTON	10
	DRIVE AND DRIVEN PULLEYS/CLUTCH	11
	FINAL REDUCTION	12
	ALTERNATOR/STARTER CLUTCH	13
	CRANKCASE/CRANKSHAFT	14
CHASSIS	FRONT WHEEL/SUSPENSION/STEERING	15
	REAR WHEEL/SUSPENSION	16
	HYDRAULIC BRAKE	17
	ANTI-LOCK BRAKE SYSTEM (SH300A/AII/AIII)	18
ELECTRICAL	BATTERY/CHARGING SYSTEM	19
	IGNITION SYSTEM	20
	ELECTRIC STARTER	21
	LIGHTS/METERS/SWITCHES	22
	WIRING DIAGRAMS	23
	TROUBLESHOOTING	24
	INDEX	25

Date of Issue: December, 2006
© Honda Motor Co., Ltd.

SYMBOLS

The symbols used throughout this manual show specific service procedures. If supplementary information is required pertaining to these symbols, it would be explained specifically in the text without the use of the symbols.

NEW	Replace the part(s) with new one(s) before assembly.
OIL	Use recommended engine oil, unless otherwise specified.
Mo OIL	Use molybdenum oil solution (mixture of the engine oil and molybdenum grease in a ratio of 1: 1).
GREASE	Use multi-purpose grease (Lithium based multi-purpose grease NLGI #2 or equivalent).
M	Use molybdenum disulfide grease (containing more than 3% molybdenum disulfide, NLGI #2 or equivalent). Example: Molykote® BR-2 plus manufactured by Dow Corning U.S.A. Multi-purpose M-2 manufactured by Mitsubishi Oil, Japan
MP	Use molybdenum disulfide paste (containing more than 40% molybdenum disulfide, NLGI #2 or equivalent). Example: Molykote® G-n Paste manufactured by Dow Corning U.S.A. Honda Moly 60 (U.S.A. only) Rocol ASP manufactured by Rocol Limited, U.K. Rocol Paste manufactured by Sumico Lubricant, Japan
S	Use silicone grease.
LOCK	Apply a locking agent. Use a middle strength locking agent unless otherwise specified.
SEAL	Apply sealant.
BRAKE FLUID	Use DOT 4 brake fluid. Use the recommended brake fluid unless otherwise specified.
FORK	Use Fork or Suspension Fluid.

1. GENERAL INFORMATION

SERVICE RULES 1-2

MODEL IDENTIFICATION 1-3

GENERAL SPECIFICATIONS 1-5

LUBRICATION SYSTEM SPECIFICATIONS 1-7

FUEL SYSTEM (PGM-FI) SPECIFICATIONS 1-7

COOLING SYSTEM SPECIFICATIONS 1-7

CYLINDER HEAD/VALVES SPECIFICATIONS 1-8

CYLINDER/PISTON SPECIFICATIONS 1-8

DRIVE AND DRIVEN PULLEYS/CLUTCH SPECIFICATIONS 1-9

FINAL REDUCTION SPECIFICATIONS 1-9

ALTERNATOR/STARTER CLUTCH SPECIFICATIONS 1-9

CRANKCASE/CRANKSHAFT SPECIFICATIONS 1-9

FRONT WHEEL/SUSPENSION/ STEERING SPECIFICATIONS 1-10

REAR WHEEL/SUSPENSION SPECIFICATIONS 1-10

HYDRAULIC BRAKE SPECIFICATIONS 1-10

BATTERY/CHARGING SYSTEM SPECIFICATIONS 1-11

IGNITION SYSTEM SPECIFICATIONS 1-11

ELECTRIC STARTER SPECIFICATION 1-11

LIGHTS/METERS/SWITCHES SPECIFICATIONS 1-11

STANDARD TORQUE VALUES 1-12

ENGINE & FRAME TORQUE VALUES 1-12

LUBRICATION & SEAL POINTS 1-16

CABLE & HARNESS ROUTING 1-19

EMISSION CONTROL SYSTEMS 1-48

SERVICE RULES

1. Use genuine Honda or Honda-recommended parts and lubricants or their equivalents. Parts that don't meet Honda's design specifications may cause damage to the motorcycle.
2. Use the special tools designed for this product to avoid damage and incorrect assembly.
3. Use only metric tools when servicing the motorcycle. Metric bolts, nuts and screws are not interchangeable with English fasteners.
4. Install new gaskets, O-rings, cotter pins, and lock plates when reassembling.
5. When tightening bolts or nuts, begin with the larger diameter or inner bolt first. Then tighten to the specified torque diagonally in incremental steps unless a particular sequence is specified.
6. Clean parts in cleaning solvent upon disassembly. Lubricate any sliding surfaces before reassembly.
7. After reassembly, check all parts for proper installation and operation.
8. Route all electrical wires as shown in the Cable and Harness Routing (page 1-19).

ABBREVIATION

Throughout this manual, the following abbreviations are used to identify the respective parts or systems.

Abbrev. term	Full term
PGM-FI	Programmed Fuel Injection
MAP sensor	Manifold Absolute Pressure sensor
TP sensor	Throttle Position sensor
ECT sensor	Engine Coolant Temperature sensor
IAT sensor	Intake Air Temperature sensor
CKP sensor	Crankshaft Position sensor
VS sensor	Vehicle Speed sensor
IACV	Idle Air Control Valve
ECM	Engine Control Module
EEPROM	Electrically Erasable Programmable Read Only Memory
DLC	Data Link Connector
SCS connector	Service Check Short connector
HDS	Honda Diagnostic System
DTC	Diagnostic Trouble Code
MIL	Malfunction Indicator Lamp
PAIR	Pulsed Secondary Air Injection
ABS	Anti-lock Brake System
HISS	Honda Ignition Security System

MODEL IDENTIFICATION

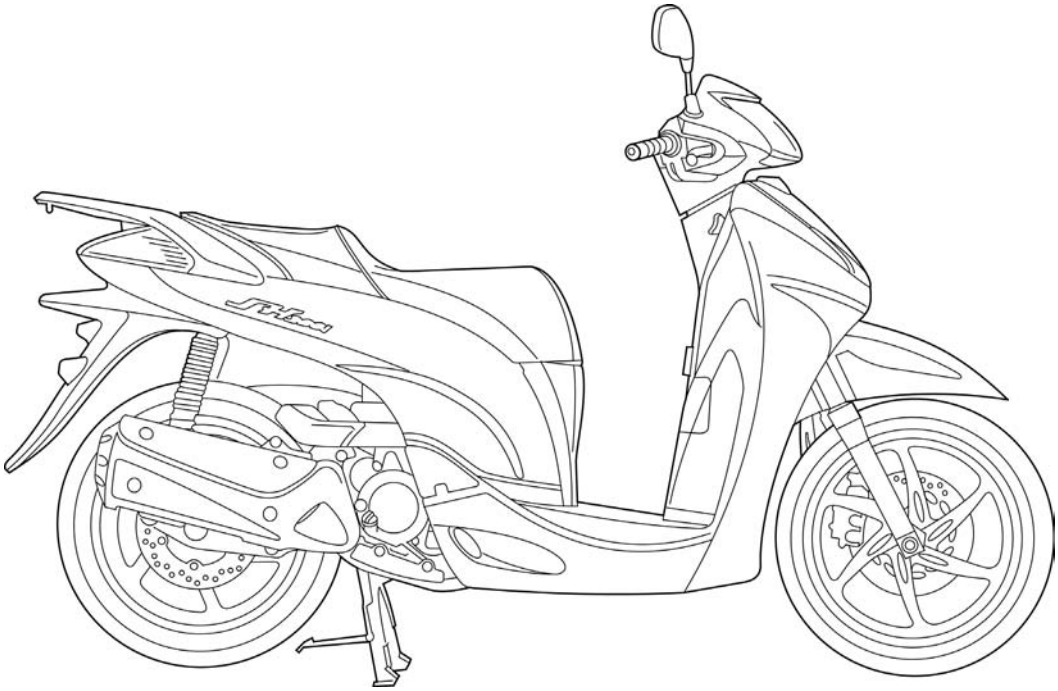

SERIAL NUMBERS

The Vehicle Identification Number (V.I.N.) is stamped on the right side of the frame near the rear shock absorber.

The registered number plate is attached on the left side of the frame near the rear shock absorber.

The engine serial number is stamped on the final reduction case near the rear wheel.

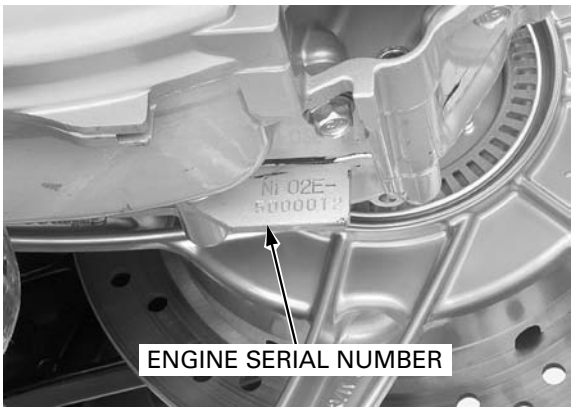

The throttle body identification number is stamped on the lower side of the throttle body.

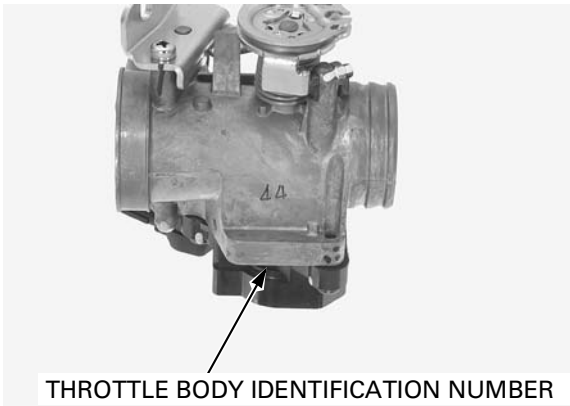

LABEL

The color label is attached on the luggage box. When ordering color-coded parts, always specify the designated color code.

GENERAL SPECIFICATIONS

STD TYPE:

ITEM		SPECIFICATION
DIMENSIONS	Overall length	2,096 mm (82.5 in)
	Overall width	730 mm (28.7 in)
	Overall height	1,187 mm (46.7 in)
	Wheelbase	1,430 mm (56.3 in)
	Seat height	785 mm (30.9 in)
	Ground clearance	136 mm (5.4 in)
	Curb weight	169 kg (372.6 lbs)
	Maximum weight capacity	180 kg (396.8 lbs)
FRAME	Frame type	Under-bone
	Front suspension	Telescopic fork
	Front axle travel	102 mm (4.0 in)
	Rear suspension	Unit swing
	Rear axle travel	95 mm (3.7 in)
	Front tire size	110/70-16 M/C 52P
	Rear tire size	130/70-16 M/C 61P
	Tire brand BRIDGESTONE	Front: HOOP B03G Rear: HOOP B02G
	Front brake	Hydraulic single disc
	Rear brake	Hydraulic single disc
	Caster angle	27° 30′
	Trail length	98 mm (3.9 in)
	Fuel tank capacity	9.1 liters (2.40 US gal, 2.00 Imp gal)
ENGINE	Cylinder arrangement	Single cylinder inclined 81° from vertical
	Bore and stroke	72.0 x 68.5 mm (2.83 x 2.70 in)
	Displacement	279 cm^3 (17.0 cu-in)
	Compression ratio	10.5: 1
	Valve train	Chain driven OHC with rocker arms
	Intake valve opens	-5° BTDC (at 1 mm lift)
	closes	35° ABDC (at 1 mm lift)
	Exhaust valve opens	35° BBDC (at 1 mm lift)
	closes	0° ATDC (at 1 mm lift)
	Lubrication system	Forced pressure and wet sump
	Oil pump type	Trochoid
	Cooling system	Liquid cooled
	Air filtration	Viscous paper element
	Engine dry weight	41 kg (90.4 lbs)
FUEL DELIVERY SYSTEM	Type	PGM-FI (Programmed Fuel Injection)
	Throttle bore	34 mm (1.3 in)
DRIVE TRAIN	Clutch system	Automatic centrifugal clutch, dry
	Gear ratio	2.350 – 0.800
	Final reduction	8.571 (40/14 x 36/12)
ELECTRICAL	Ignition system	Full transistorized ignition
	Starting system	Electric starter motor
	Charging system	Triple phase output alternator
	Regulator/rectifier	FET shorted, triple phase full-wave rectification
	Lighting system	Battery

ABS TYPE:

ITEM		SPECIFICATION
DIMENSIONS	Overall length	2,096 mm (82.5 in)
	Overall width	730 mm (28.7 in)
	Overall height	1,187 mm (46.7 in)
	Wheelbase	1,430 mm (56.3 in)
	Seat height	785 mm (30.9 in)
	Ground clearance	136 mm (5.4 in)
	Curb weight	172 kg (379.2 lbs)
	Maximum weight capacity	180 kg (396.8 lbs)
FRAME	Frame type	Under-bone
	Front suspension	Telescopic fork
	Front axle travel	102 mm (4.0 in)
	Rear suspension	Unit swing
	Rear axle travel	95 mm (3.7 in)
	Front tire size	110/70-16 M/C 52P
	Rear tire size	130/70-16 M/C 61P
	Tire brand BRIDGESTONE	Front: HOOP B03G Rear: HOOP B02G
	Front brake	Hydraulic single disc
	Rear brake	Hydraulic single disc
	Caster angle	27° 30′
	Trail length	98 mm (3.9 in)
	Fuel tank capacity	9.1 liters (2.40 US gal, 2.00 Imp gal)
ENGINE	Cylinder arrangement	Single cylinder inclined 81° from vertical
	Bore and stroke	72.0 x 68.5 mm (2.83 x 2.70 in)
	Displacement	279 cm^3 (17.0 cu-in)
	Compression ratio	10.5: 1
	Valve train	Chain driven OHC with rocker arms
	Intake valve opens	-5° BTDC (at 1 mm lift)
	closes	35° ABDC (at 1 mm lift)
	Exhaust valve opens	35° BBDC (at 1 mm lift)
	closes	0° ATDC (at 1 mm lift)
	Lubrication system	Forced pressure and wet sump
	Oil pump type	Trochoid
	Cooling system	Liquid cooled
	Air filtration	Viscous paper element
	Engine dry weight	41 kg (90.4 lbs)
FUEL DELIVERY SYSTEM	Type	PGM-FI (Programmed Fuel Injection)
	Throttle bore	34 mm (1.3 in)
DRIVE TRAIN	Clutch system	Automatic centrifugal clutch, dry
	Gear ratio	2.350 – 0.800
	Final reduction	8.571 (40/14 x 36/12)
ELECTRICAL	Ignition system	Full transistorized ignition
	Starting system	Electric starter motor
	Charging system	Triple phase output alternator
	Regulator/rectifier	FET shorted, triple phase full-wave rectification
	Lighting system	Battery

LUBRICATION SYSTEM SPECIFICATIONS

Unit: mm (in)

ITEM		STANDARD	SERVICE LIMIT
Engine oil capacity	After draining	1.2 liter (1.3 US qt, 1.1 Imp qt)	–
	After oil filter change	1.4 liter (1.5 US qt, 1.2 Imp qt)	–
	After disassembly	1.7 liter (1.8 US qt, 1.5 Imp qt)	–
Recommended oil		Honda "4-stroke motorcycle oil" or an equivalent API service classification: SG or higher (except oils labeled as energy conserving on the circular API service label) Viscosity: SAE 10W-30 JASO T 903 standard: MB	–
Oil pressure at EOP (engine oil pressure) switch		530 kPa (5.4 kgf/cm^2, 77 psi) at 5,000 min^{-1} (rpm) (80°C/176°F)	–
Oil pump rotor	Tip clearance	0.15 (0.006)	0.20 (0.008)
	Body clearance	0.15 – 0.22 (0.006 – 0.009)	0.35 (0.014)
	Side clearance	0.02 – 0.09 (0.001 – 0.004)	0.12 (0.005)

FUEL SYSTEM (PGM-FI) SPECIFICATIONS

ITEM	SPECIFICATIONS
Throttle body identification number	GQB4A
Engine idle speed	1,500 ± 100 min^{-1} (rpm)
Throttle grip free play	2 – 6 mm (0.1 – 0.2 in)
Fuel injector resistance (at 20°C /68°F)	11 – 13 Ω
PAIR control solenoid valve resistance (at 20°C/68°F)	20 – 24 Ω
Fuel pressure at idle	294 kPa (3.0 kgf/cm^2, 43 psi)
Fuel pump flow (at 12 V)	33.3 cm^3 (1.1 US oz, 1.2 Imp oz) minimum/10 seconds

COOLING SYSTEM SPECIFICATIONS

ITEM		SPECIFICATIONS
Coolant capacity	Radiator and engine	1.1 liter (1.2 US qt, 1.0 Imp qt)
	Reserve tank	0.2 liter (0.2 US qt, 0.2 Imp qt)
Radiator cap relief pressure		108 – 137 kPa (1.1 – 1.4 kgf/cm^2, 16 – 20 psi)
Thermostat	Begin to open	80 – 84 °C (176 – 183 °F)
	Fully open	95 °C (203 °F)
	Valve lift	4.5 mm (0.18 in) minimum
Standard coolant concentration		1:1 mixture with distilled water

CYLINDER HEAD/VALVES SPECIFICATIONS

Unit: mm (in)

ITEM			STANDARD	SERVICE LIMIT
Cylinder compression at 450 min^{-1} (rpm)			1,569 kPa (16.0 kgf/cm^2, 228 psi)	–
Camshaft	Cam lobe height	IN	39.325 – 39.485 (1.5482 – 1.5545)	39.295 (1.5470)
		EX	37.034 – 37.194 (1.4580– 1.4643)	37.034 (1.4580)
Cylinder head warpage			–	0.05 (0.002)
Rocker arm	Arm I.D.	IN/EX	13.000 – 13.018 (0.5118 – 0.5125)	13.10 (0.516)
	Shaft O.D.	IN/EX	12.966 – 12.984 (0.5105 – 0.5112)	12.91 (0.508)
	Arm-to-shaft clearance	IN/EX	0.016 – 0.052 (0.0006 – 0.0020)	0.08 (0.003)
	Side spring free length		17.1 (0.67)	15.5(0.61)
Valve, valve guide	Valve clearance	IN	0.16 ± 0.03 (0.006 ± 0.001)	–
		EX	0.22 ± 0.03 (0.009 ± 0.001)	–
	Valve stem O.D.	IN	4.475 – 4.490 (0.1762 – 0.1768)	4.465 (0.1758)
		EX	4.465 – 4.480 (0.1758 – 0.1764)	4.455 (0.1754)
	Valve guide I.D.	IN/EX	4.500 – 4.512 (0.1772 – 0.1776)	4.54 (0.179)
	Stem-to-guide clearance	IN	0.010 – 0.037 (0.0004 – 0.0015)	0.08 (0.003)
		EX	0.020 – 0.047 (0.0008 – 0.0019)	0.09 (0.004)
	Valve guide projection above cylinder head	IN	11.20 – 11.50 (0.441 – 0.453)	–
		EX	12.20 – 12.50 (0.480 – 0.492)	–
	Valve seat width	IN/EX	0.90 – 1.10 (0.035 – 0.043)	1.5 (0.06)
Valve spring free length		IN/EX	37.09 (1.460)	35.6 (1.40)

CYLINDER/PISTON SPECIFICATIONS

Unit: mm (in)

ITEM			STANDARD	SERVICE LIMIT
Cylinder	I.D.		72.000 – 72.010 (2.8346 – 2.8350)	72.045 (2.8364)
	Out-of-round		–	0.05 (0.002)
	Taper		–	0.05 (0.002)
	Warpage		–	0.05 (0.002)
Piston, piston pin, piston ring	Piston O.D. at 10 (0.4) from bottom		71.97 – 71.99 (2.833 – 2.834)	71.90 (2.831)
	Piston pin hole I.D.		17.002 – 17.008 (0.6694 – 0.6696)	17.03 (0.670)
	Piston pin O.D.		16.994 – 17.000 (0.6691 – 0.6693)	16.98 (0.669)
	Piston-to-piston pin clearance		0.002 – 0.014 (0.0001 – 0.0006)	0.02 (0.001)
	Piston ring end gap	Top	0.15 – 0.30 (0.006 – 0.012)	0.50 (0.019)
		Second	0.30 – 0.45 (0.012 – 0.018)	0.65 (0.026)
		Oil (side rail)	0.20 – 0.70 (0.008 – 0.028)	1.00 (0.039)
	Piston ring-to-ring groove clearance	Top	0.030 – 0.065 (0.0012 – 0.0026)	0.080 (0.0031)
		Second	0.015 – 0.050 (0.0006 – 0.0020)	0.065 (0.0026)
Cylinder-to-piston clearance			0.010 – 0.040 (0.0004 – 0.0016)	0.10 (0.004)
Connecting rod small end I.D.			17.016 – 17.034 (0.6699 – 0.6706)	17.06 (0.672)
Connecting rod-to-piston pin clearance			0.016 – 0.040 (0.0006 – 0.0016)	0.06 (0.002)

DRIVE AND DRIVEN PULLEYS/CLUTCH SPECIFICATIONS

Unit: mm (in)

ITEM		STANDARD	SERVICE LIMIT
Drive belt width		26.5 (1.04)	25.5 (1.00)
Movable drive face	Bushing I.D.	30.024 – 30.057 (1.1820 – 1.01833)	30.08 (1.184)
	Boss O.D.	29.995 – 30.031 (1.1809 – 1.1823)	29.98 (1.180)
	Weight roller O.D.	22.92 – 23.08 (0.902 – 0.909)	22.5 (0.89)
Clutch	Clutch outer I.D.	135.0 – 135.2 (5.31 – 5.32)	135.5 (5.33)
	Lining thickness	4.0 (0.16)	1.0 (0.04)
Driven pulley	Face spring free length	109.6 (4.31)	106 (4.2)
	Driven face boss O.D.	39.965 – 39.985 (1.5734 – 1.5742)	39.94 (1.572)
	Movable driven face I.D.	40.000 – 40.025 (1.5748 – 1.5758)	40.06 (1.577)

FINAL REDUCTION SPECIFICATIONS

ITEM		SPECIFICATIONS
Final drive oil capacity	After draining	0.28 liter (0.30 US qt, 0.25 Imp qt)
	After disassembly	0.30 liter (0.32 US qt, 0.26 Imp qt)
Recommended final drive oil		Honda "4-stroke motorcycle oil" or an equivalent API service classification: SG or higher (except oils labeled as energy conserving on the circular API service label) Viscosity: SAE 10W-30 JASO T 903 standard: MA

ALTERNATOR/STARTER CLUTCH SPECIFICATIONS

Unit: mm (in)

ITEM		STANDARD	SERVICE LIMIT
Starter driven gear	Boss O.D.	45.660 – 45.673 (1.7976 – 1.7981)	45.615 (1.6778)
	Bushing I.D.	25.026 – 25.045 (0.9853 – 0.9860)	25.100 (0.9882)
Starter clutch outer I.D.		62.319 – 62.345 (2.4535 – 2.4545)	62.395 (2.4565)

CRANKCASE/CRANKSHAFT SPECIFICATIONS

Unit: mm (in)

ITEM		STANDARD	SERVICE LIMIT
Crankshaft	Connecting rod big end side clearance	0.15 – 0.30 (0.006 – 0.0012)	0.40 (0.016)
	Crankpin bearing oil clearance	0.030 – 0.052 (0.0012 – 0.0020)	0.07 (0.003)
	Main journal oil clearance	0.020 – 0.038 (0.0008 – 0.0015)	0.07 (0.003)
	Crankshaft runout	–	0.10 (0.004)
	Main journal O.D.	39.982 – 40.000 (1.5741 – 1.5748)	39.976 (1.5739)
Main journal I.D.		45.000 – 45.012 (1.7717 – 1.7721)	45.060 (1.7740)

FRONT WHEEL/SUSPENSION/STEERING SPECIFICATIONS

Unit: mm (in)

ITEM		STANDARD	SERVICE LIMIT
Minimum tire tread depth		–	1.5 (0.06)
Cold tire pressure	Driver only	200 kPa (2.00 kgf/cm^2, 28 psi)	–
	Driver and passenger	200 kPa (2.00 kgf/cm^2, 28 psi)	–
Axle runout		–	0.2 (0.01)
Wheel rim runout	Radial	–	2.0 (0.08)
	Axial	–	2.0 (0.08)
Wheel balance weight		–	70 g (2.5 oz) maximum
Fork	Spring free length	263.5 (10.37)	257.5 (10.14)
	Pipe runout	–	0.2 (0.01)
	Recommended fork fluid	Honda Ultra Cushion Oil 10W or equivalent	–
	Fluid level	90 (3.5)	–
	Fluid capacity	151 ± 2.5 cm^3 (5.1 ± 0.08 US oz, 5.3 ± 0.09 Imp oz)	–

REAR WHEEL/SUSPENSION SPECIFICATIONS

Unit: mm (in)

ITEM			STANDARD	SERVICE LIMIT
Minimum tire tread depth			–	2.0 (0.08)
Cold tire pressure	Driver only		225 kPa (2.25 kgf/cm^2, 33 psi)	–
	Driver and passenger		225 kPa (2.25 kgf/cm^2, 33 psi)	–
Wheel	Rim runout	Radial	–	2.0 (0.08)
		Axial	–	2.0 (0.08)
	Balance weight		–	70 g (2.5 oz) maximum

HYDRAULIC BRAKE SPECIFICATIONS

Unit: mm (in)

ITEM			STANDARD	SERVICE LIMIT
Front	Specified brake fluid		DOT 4	–
	Brake disc thickness		4.3 – 4.7 (0.17 – 0.19)	3.5 (0.14)
	Brake disc warpage		–	0.25 (0.010)
	Master cylinder I.D.		11.000 – 11.043 (0.4331 – 0.4348)	11.055 (0.4352)
	Master piston O.D.		10.957 – 10.984 (0.4314 – 0.4324)	10.945 (0.4309)
	Caliper cylinder I.D.	Upper	25.400 – 25.450 (1.0000 – 1.0020)	25.460 (1.0024)
		Middle	22.650 – 22.700 (0.8917 – 0.8937)	22.710 (0.8941)
		Lower	25.400 – 25.450 (1.0000 – 1.0020)	25.460 (1.0024)
	Caliper piston O.D.	Upper	25.318 – 25.368 (0.9968 – 0.9987)	25.31 (0.996)
		Middle	22.585 – 22.618 (0.8892 – 0.8905)	22.56 (0.888)
		Lower	25.318 – 25.368 (0.9968 – 0.9987)	25.31 (0.996)
Rear	Specified brake fluid		DOT 4	–
	Brake disc thickness		4.8 – 5.2 (0.19 – 0.20)	4.0 (0.16)
	Brake disc warpage		–	0.25 (0.010)
	Master cylinder I.D.		12.700 – 12.743 (0.5000 – 0.5017)	12.755 (0.5022)
	Master piston O.D.		12.657 – 12.684 (0.4983 – 0.4994)	12.645 (0.4987)
	Caliper cylinder I.D.		38.180 – 38.230 (1.5031 – 1.5051)	38.24 (1.506)
	Caliper piston O.D.		38.098 – 38.148 (1.4999 – 1.5019)	38.09 (1.500)

BATTERY/CHARGING SYSTEM SPECIFICATIONS

ITEM			SPECIFICATIONS
Battery	Capacity		12 V – 11 (10) Ah
	Current leakage		1.5 mA max.
	Voltage (20°C/68°F)	Fully charged	Above 12.8 V
		Needs charging	Below 12.3 V
	Charging current	Normal	1.1 A/5 – 10 h
		Quick	5.5 A/1.0 h
Alternator capacity			0.368 kW/5,000 min^{-1} (rpm)

IGNITION SYSTEM SPECIFICATIONS

ITEM	SPECIFICATIONS
Spark plug	LMAR8A-9 (NGK)
Spark plug gap	0.8 – 0.9 mm (0.03 – 0.04 in)
Ignition coil primary peak voltage	100 V minimum
Crankshaft position (CKP) sensor peak voltage	0.7 V minimum
Ignition timing ("F" mark)	10° BTDC at idle

ELECTRIC STARTER SPECIFICATION

Unit: mm (in)

ITEM	STANDARD	SERVICE LIMIT
Starter motor brush length	10.0 – 10.5 (0.39 – 0.41)	6.5 (0.26)

LIGHTS/METERS/SWITCHES SPECIFICATIONS

ITEM			SPECIFICATIONS
Bulb	Headlight (high/low beam)		12 V - 60/55 W
	Brake/taillight		12 V - 21/5 W
	License light		12 V - 5 W
	Turn signal light		12 V - 21 W x 4
	Position light		12 V - 5 W x 2
	Instrument light		LED
	High beam indicator		12 V - 1.12 W
	Turn signal indicator		12 V - 1.4 W x 2
	PGM-FI malfunction indicator		LED
	Engine oil pressure indicator		12 V - 1.4 W
	Engine oil change indicator		LED
Fuse	Main fuse		30 A
	Sub-fuse	STD type	15 A x 1, 10 A x 5
		ABS type	30 A x 2, 15 A x 1, 10 A x 6

STANDARD TORQUE VALUES

FASTENER TYPE	TORQUE N·m (kgf·m, lbf·ft)	FASTENER TYPE	TORQUE N·m (kgf·m, lbf·ft)
5 mm hex bolt and nut	5 (0.5, 3.6)	5 mm screw	4 (0.4, 2.9)
6 mm hex bolt and nut	10 (1.0, 7)	6 mm screw	9 (0.9, 6.5)
8 mm hex bolt and nut	22 (2.2, 16)	6 mm flange bolt (8 mm head, small flange)	10 (1.0, 7)
10 mm hex bolt and nut	34 (3.5, 25)	6 mm flange bolt (8 mm head, large flange)	12 (1.2, 9)
12 mm hex bolt and nut	54 (5.5, 40)	6 mm flange bolt (10 mm head) and nut	12 (1.2, 9)
		8 mm flange bolt and nut	26 (2.7, 20)
		10 mm flange bolt and nut	39 (4.0, 29)

ENGINE & FRAME TORQUE VALUES

- Torque specifications listed below are for important fasteners.
- Others should be tightened to standard torque values listed above.

ENGINE

FRAME/BODY PANELS

ITEM	Q'TY	THREAD DIA. (mm)	TORQUE N·m (kgf·m, lbf·ft)	REMARKS
Exhaust pipe stud bolt	2	8	9 (0.9, 6.6)	See page 3-15

MAINTENANCE

ITEM	Q'TY	THREAD DIA. (mm)	TORQUE N·m (kgf·m, lbf·ft)	REMARKS
Spark plug	1	10	16 (1.6, 12)	
Timing hole cap	1	14	6 (0.6, 4.4)	Apply oil to the threads and seating surface.
Engine oil drain bolt	1	12	25 (2.5, 18)	Apply oil to the threads and seating surface.
Oil filter cartridge	1	20	26 (2.7, 19)	Apply oil to the threads and seating surface.
Oil filter boss	1	20	18 (1.8, 13)	See page 4-12
Belt case air cleaner housing socket bolt	3	6	10 (1.0, 7)	
Final drive oil check bolt	1	8	13 (1.3, 10)	
Final drive oil filler bolt	1	8	13 (1.3, 10)	
Final drive oil drain bolt	1	8	13 (1.3, 10)	

LUBRICATION SYSTEM

ITEM	Q'TY	THREAD DIA. (mm)	TORQUE N·m (kgf·m, lbf·ft)	REMARKS
Oil pressure switch	1	PT 1/8	12 (1.2, 9)	Apply sealant to the threads.
Oil pump cover screw	1	3	2 (0.2, 1.5)	
Oil pump driven sprocket bolt	1	6	12 (1.2, 9)	Apply oil to the threads and seating surface. Left-hand threads.

FUEL SYSTEM (PGM-FI)

ITEM	Q'TY	THREAD DIA. (mm)	TORQUE N·m (kgf·m, lbf·ft)	REMARKS
Throttle body insulator band screw	2	5	5 (0.5, 3.7)	
IACV set plate torx screw	2	4	2.1 (0.2, 1.5)	
Sensor unit mounting torx screw	3	5	3.4 (0.3, 2.5)	
Throttle body cable bracket screw	1	5	3.4 (0.3, 2.5)	
Throttle body wire clamp plate screw	1	5	3.4 (0.3, 2.5)	
ECT sensor	1	12	25 (2.5, 18)	
O_2 sensor	1	12	25 (2.5, 18)	

COOLING SYSTEM

ITEM	Q'TY	THREAD DIA. (mm)	TORQUE N·m (kgf·m, lbf·ft)	REMARKS
Water pump impeller	1	7	12 (1.2, 9)	Left-hand threads.

CYLINDER HEAD/VALVES

ITEM	Q'TY	THREAD DIA. (mm)	TORQUE N·m (kgf·m, lbf·ft)	REMARKS
Cylinder head bolt	4	9	38 (3.9, 28)	Apply oil to the threads and seating surface.
Cam stopper plate bolt	1	6	12 (1.2, 9)	Apply locking agent.
Cam sprocket bolt	2	6	16 (1.6, 12)	Apply locking agent.
Cam chain tensioner lifter sealing bolt	1	11	22 (2.2, 16)	
Cylinder head cover bolt	2	6	10 (1.0, 7)	

DRIVE AND DRIVEN PULLEYS/CLUTCH

ITEM	Q'TY	THREAD DIA. (mm)	TORQUE N·m (kgf·m, lbf·ft)	REMARKS
Clutch/driven pulley nut	1	30	79 (8.1, 58)	
Clutch outer nut	1	12	74 (7.5, 55)	
Drive pulley face bolt	1	10	83 (8.5, 61)	Apply oil to the threads and seating surface. UBS bolt.

FINAL REDUCTION

ITEM	Q'TY	THREAD DIA. (mm)	TORQUE N·m (kgf·m, lbf·ft)	REMARKS
Final reduction case bolt	7	8	24 (2.4, 18)	

ALTERNATOR/STARTER CLUTCH

ITEM	Q'TY	THREAD DIA. (mm)	TORQUE N·m (kgf·m, lbf·ft)	REMARKS
Starter clutch outer socket bolt	6	6	23 (2.3, 17)	Apply locking agent.
Flywheel bolt	1	10	103 (10.5, 76)	Apply oil to the threads and seating surface. UBS bolt.

CRANKCASE/CRANKSHAFT/BALANCER/PISTON

ITEM	Q'TY	THREAD DIA. (mm)	TORQUE N·m (kgf·m, lbf·ft)	REMARKS
Crank pin bearing cap nut	2	8	33 (3.4, 24)	Apply oil to the threads and seating surface.
Cam chain tensioner pivot bolt	1	6	12 (1.2, 9)	

ELECTRIC STARTER

ITEM	Q'TY	THREAD DIA. (mm)	TORQUE N·m (kgf·m, lbf·ft)	REMARKS
Starter motor cable terminal nut	1	6	10 (1.0, 7)	
Starter motor cover bolt	2	5	4.9 (0.5, 3.6)	
Starter motor negative brush screw	1	5	3.7 (0.4, 2.7)	

OTHERS

ITEM	Q'TY	THREAD DIA. (mm)	TORQUE N·m (kgf·m, lbf·ft)	REMARKS
Centerstand spring hook bolt	1	6	12 (1.2, 9)	Apply locking agent.
Left crankcase sealing torx bolt	1	8	23 (2.3, 17)	Apply locking agent.
Right crankcase sealing torx bolt	1	8	23 (2.3, 17)	Apply locking agent.

FRAME

FRAME/BODY PANELS/EXHAUST SYSTEM

ITEM	Q'TY	THREAD DIA. (mm)	TORQUE N·m (kgf·m, lbf·ft)	REMARKS
Luggage box mounting bolt	4	6	10 (1.0, 7)	
Luggage box mounting washer bolt	2	6	10 (1.0, 7)	
Front fender mounting bolt	3	6	12 (1.2, 9)	
Rear view mirror lock nut	2	6	34 (3.5, 25)	
Exhaust pipe joint nut	2	8	29 (3.0, 21)	
Exhaust pipe band bolt	1	8	22 (2.2, 16)	
Muffler mounting bolt	3	10	49 (5.0, 36)	
Sidestand pivot bolt	1	10	10 (1.0, 7)	
Sidestand pivot nut	1	10	30 (3.1, 22)	U-nut.

MAINTENANCE

ITEM	Q'TY	THREAD DIA. (mm)	TORQUE N·m (kgf·m, lbf·ft)	REMARKS
Air cleaner housing cover screw	7	5	1.5 (0.2, 1.1)	

FUEL SYSTEM (PGM-FI)

ITEM	Q'TY	THREAD DIA. (mm)	TORQUE N·m (kgf·m, lbf·ft)	REMARKS
Fuel pump setting plate nut	7	6	12 (1.2, 9)	See page 6-50
Fuel tank mounting washer bolt	4	6	12 (1.2, 9)	
Air cleaner housing mounting washer bolt	2	6	11 (1.1, 8)	
Bank angle sensor mounting screw	2	4	1.2 (0.1, 0.9)	

COOLING SYSTEM

ITEM	Q'TY	THREAD DIA. (mm)	TORQUE N·m (kgf·m, lbf·ft)	REMARKS
Cooling fan motor mounting bolt	2	6	8.5 (0.9, 6.3)	

ENGINE REMOVAL/INSTALLATION

ITEM	Q'TY	THREAD DIA. (mm)	TORQUE N·m (kgf·m, lbf·ft)	REMARKS
Frame pivot nut	1	12	78 (8.0, 58)	U-nut.
Engine pivot nut	1	12	78 (8.0, 58)	U-nut.
Engine hanger bracket nut	1	12	64 (6.5, 47)	U-nut.
Swing rod nut (Upper)	1	10	42 (4.3, 31)	U-nut.
Swing rod nut (Lower)	1	10	52 (5.3, 38)	U-nut.

FRONT WHEEL/SUSPENSION/STEERING

ITEM	Q'TY	THREAD DIA. (mm)	TORQUE N·m (kgf·m, lbf·ft)	REMARKS
Steering stem lock nut	1	26	68 (6.9, 50)	
Steering stem adjusting nut	1	26	–	See page 15-30.
Steering stem pinch bolt	4	10	49 (5.0, 36)	
Fork socket bolt	2	8	20 (2.0, 15)	Apply locking agent.
Handlebar post bolt	2	12	128 (13.1, 94)	ALOC bolt.
Front brake disc socket bolt	6	8	42 (4.3, 31)	ALOC bolt.
Front pulser ring torx bolt (ABS type only)	3	5	8 (0.8, 5.9)	ALOC bolt.
Front axle nut	1	14	98(10.0, 72)	U-nut.
Front axle holder socket bolt (right side only)	2	8	36 (3.7, 27)	ALOC bolt.

REAR WHEEL/SUSPENSION

ITEM	Q'TY	THREAD DIA. (mm)	TORQUE N·m (kgf·m, lbf·ft)	REMARKS
Swingarm mounting bolt	2	10	49 (5.0, 36)	
Rear axle nut	1	16	118 (12.0, 87)	U-nut.
Rear brake disc socket bolt	6	8	42 (4.3, 31)	ALOC bolt.
Rear pulser ring torx bolt (ABS type only)	4	5	8 (0.8, 5.9)	ALOC bolt.

HYDRAULIC BRAKE

ITEM	Q'TY	THREAD DIA. (mm)	TORQUE N·m (kgf·m, lbf·ft)	REMARKS
Caliper bleed valve	3	8	5.4 (0.6, 4.0)	
Pad pin	1	10	17 (1.7, 13)	
Master cylinder reservoir cap screw	4	4	1.5 (0.2, 1.1)	
Brake hose oil bolt				
STD type:	7	10	34 (3.5, 25)	
ABS type:	6	10	34 (3.5, 25)	
Brake pipe joint nut	1	10	14 (1.4, 10)	Apply brake fluid to the threads.
Brake lever pivot bolt	2	6	1 (0.1, 0.7)	
Brake lever pivot nut	2	6	6 (0.6, 4.4)	
Brake light switch screw	1	4	1.2 (0.1, 0.9)	
Brake light/inhibitor switch screw	2	4	1.2 (0.1, 0.9)	
Master cylinder holder bolt	4	6	12 (1.2, 9)	
Caliper mounting bolt	4	8	30 (3.1, 22)	ALOC bolt.
Front caliper pin bolt	1	8	22 (2.2, 16)	Apply locking agent.
Front caliper bracket pin bolt	1	8	12 (1.2, 9)	Apply locking agent.
Rear caliper bolt	1	8	22 (2.2, 16)	
Rear caliper pin bolt	1	8	22 (2.2, 16)	Apply locking agent.

ANTI-LOCK BRAKE SYSTEM (ABS)

ITEM	Q'TY	THREAD DIA. (mm)	TORQUE N·m (kgf·m, lbf·ft)	REMARKS
Brake pipe joint nut	6	10	14 (1.4, 10)	Apply brake fluid to the threads.
Sensor protector socket bolt	4	6	10 (1.0, 7)	ALOC bolt.

LIGHTS/METERS/SWITCHES

ITEM	Q'TY	THREAD DIA. (mm)	TORQUE N·m (kgf·m, lbf·ft)	REMARKS
License light unit screw	1	-	1.5 (0.2, 1.1)	
Sidestand switch bolt	1	6	10 (1.0, 7)	

OTHER

ITEM	Q'TY	THREAD DIA. (mm)	TORQUE N·m (kgf·m, lbf·ft)	REMARKS
Muffler protector special screw	9	5	5.2 (0.5, 3.8)	

LUBRICATION & SEAL POINTS

ENGINE

MATERIAL	LOCATION	REMARKS
Liquid sealant (Three Bond 1207B or equivalent)	Oil pressure switch threads Final reduction case mating surface Crankcase mating surface	See page 5-5 See page 12-12 See page 14-16
Liquid sealant (Three Bond 1211 or shell KE45T or equivalent)	Cylinder head semi-circular cut-out	See page 9-24
Molybdenum disulfide oil (a mixture of 1/2 engine oil and 1/2 molybdenum disulfide grease)	Water pump shaft journal Water pump shaft thrust washer sliding surface Camshaft cam lobes and bearing Rocker arm shaft sliding surface Rocker arm roller sliding area Valve stem (valve guide sliding surface) Piston pin outer surface Connecting rod small end inner surface Starter driven gear inner surface (crankshaft sliding area) Crankshaft thrust surface Crankshaft journal	
Engine oil	Timing hole cap threads Engine oil drain bolt threads and seating surface Cylinder head mounting bolt threads and seating surface Oil filter cartridge threads and O-ring Oil pump rotors and shaft sliding surface Oil pump drive chain Oil pump driven sprocket bolt threads Oil pump driven sprocket teeth Cam sprocket teeth Cam chain Piston rings and ring groove Piston and cylinder wall Drive pulley face bolt threads and seating surface Final reduction gear teeth and journals Starter sprag clutch outer surface Starter driven gear teeth Starter reduction gear teeth and sliding surface Starter reduction gear shaft outer surface Flywheel bolt threads and seating surface Connecting rod bolt/nut threads and seating surface Timing sprocket teeth Oil pump drive sprocket teeth Starter motor pinion gear teeth Each bearing rotating area Each oil seal lips and outer surface Each O-ring	
Molybdenum disulfide paste (SUMICO MOLYPASTE 500 or equivalent)	Engine mount bushing groove	Fill up 0.5 – 0.7 g
Molybdenum disulfide paste (SUMICO MOLYPASTE 300 or 500 or equivalent)	Driveshaft bearing collar groove	

MATERIAL	LOCATION	REMARKS
Grease (Shell ALVANIA R3 or SHIN-NIHON POWERNOC WB3 or IDEMITSU AUTOREX B or equivalent)	Driven face boss inner surface Movable driven face guide grooves (guide pin areas)	Fill up 5 – 7 g Fill up 4 – 5 g
Multi-purpose grease	Movable driven face ball and needle bearing Each oil seal lips	
Locking agent	Oil filter boss crankcase side threads Centerstand spring hook bolt threads Cam stopper plate bolt threads Cam sprocket bolt threads Cylinder head sealing bolt threads Starter clutch outer socket bolt threads Starter driven gear guide bolt threads Right and left crankcase sealing torx bolt threads	 Coating width: 6.5 ± 1.0 mm (0.26 ± 0.04 in) from its tip Coating width: 6.5 ± 1.0 mm (0.26 ± 0.04 in) from its tip Coating width: 6.5 ± 1 mm (0.26 ± 0.04 in) from its tip to 2.0 – 3.0 mm (0.08 – 0.12 in) down Coating width: 6.5 ± 1.0 mm (0.26 ± 0.04 in) from its tip Coating width: 6.5 ± 1.0 mm (0.26 ± 0.04 in) from its tip Coating width: 6.5 ± 1.0 mm (0.26 ± 0.04 in) from its tip
Degrease	Flywheel tapered area Water pump shaft (mechanical seal area) Drive/driven pulley face and drive belt	

FRAME

MATERIAL	LOCATION	REMARKS
Multi-purpose grease	Seat catch sliding area Sidestand pivot sliding area Centerstand pivot inside Centerstand shaft sliding surface Throttle grip pipe flange cable groove Engine hanger bracket B needle bearing Engine hanger bracket B inner collar outer surface Engine hanger bracket B dust seal lips Front wheel dust seal lips Front wheel bearing whole surface Swingarm dust seal lips Passenger footpeg contact area Final shaft outer surface (swingarm bearing fitting area) Final shaft groove	Apply 1.5 g minimum Apply 3.0 g minimum Apply 0.1 – 0.2 g Apply 0.03 – 0.04 g
Urea based multi-purpose grease with extreme pressure agent (example: EXCELITE EP2 manufactured by KYODO YUSHI, Japan), Shell Stamina EP2 or equivalent	Steering head bearings Steering head dust seal lips	Apply 3 – 5 g each
Engine oil	Fuel pump rubber seal inner surface	Apply 1.0 g maximum
Honda bond A, Honda hand grip cement, Cemedine #540 or equivalent	Handlebar grip rubber inside Brake caliper bracket pad retainer	
Silicone grease	Throttle cable inside Throttle cable boot inside Brake master cylinder piston boot inner surface Brake lever contacting area with piston Brake lever pivot sliding area Pad pin stopper ring outer surface Brake caliper dust seal Brake caliper pin sliding area and boot Brake caliper bracket pin sliding area and boot	Apply 0.2 g minimum Apply 0.1 cc Apply 0.1 g Apply 0.1 g Apply 0.4 g minimum Apply 0.4 g minimum
DOT 4 brake fluid	Master cylinder piston outer surface and cup Caliper piston whole surface Caliper piston seal whole surface Brake pipe joint nut threads	
Fork fluid	Fork oil seal lips Fork dust seal lips Spring seat O-ring	
Locking agent	Fork socket bolt threads Sensor protector socket bolt threads	

CABLE & HARNESS ROUTING

STD TYPE

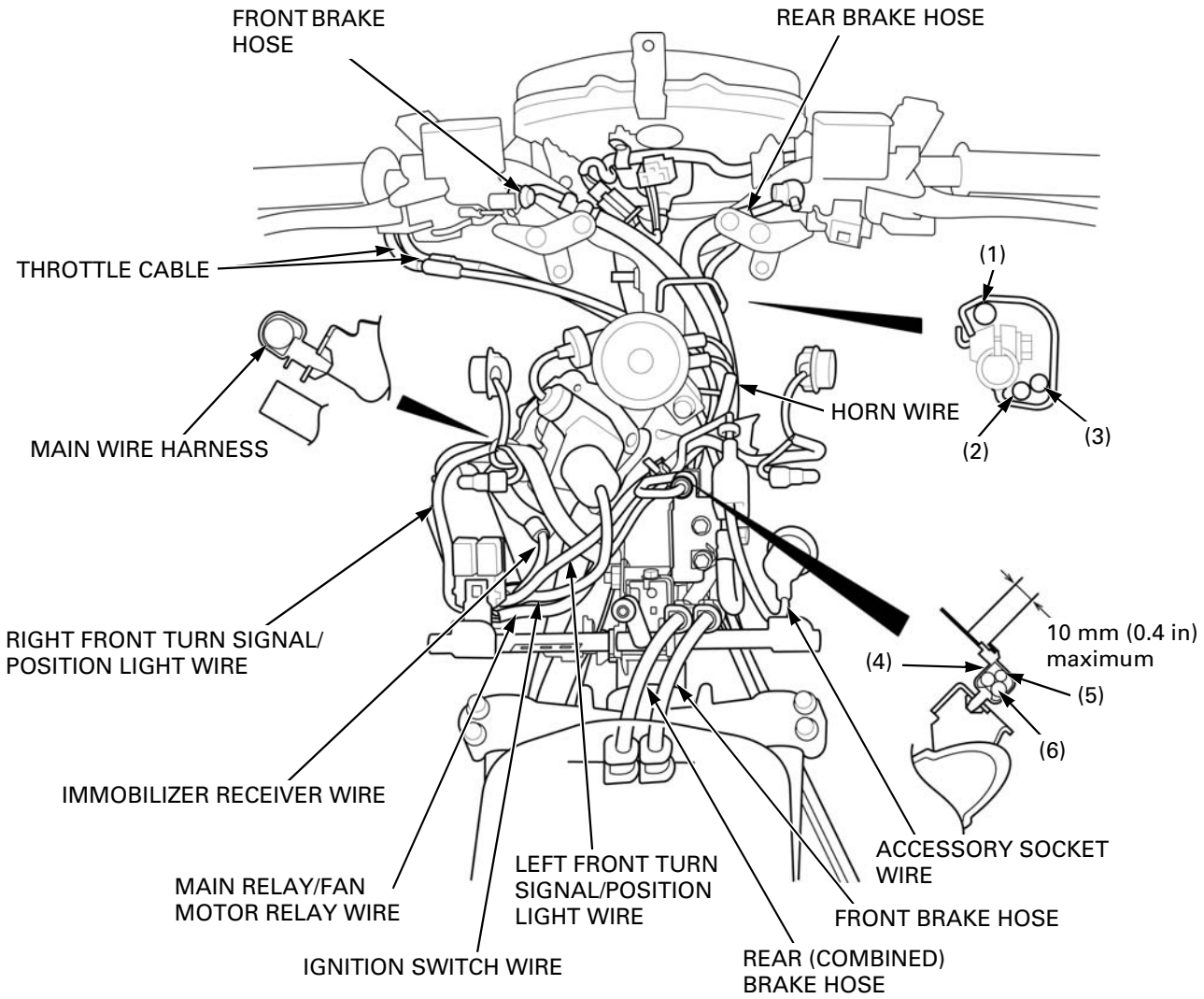

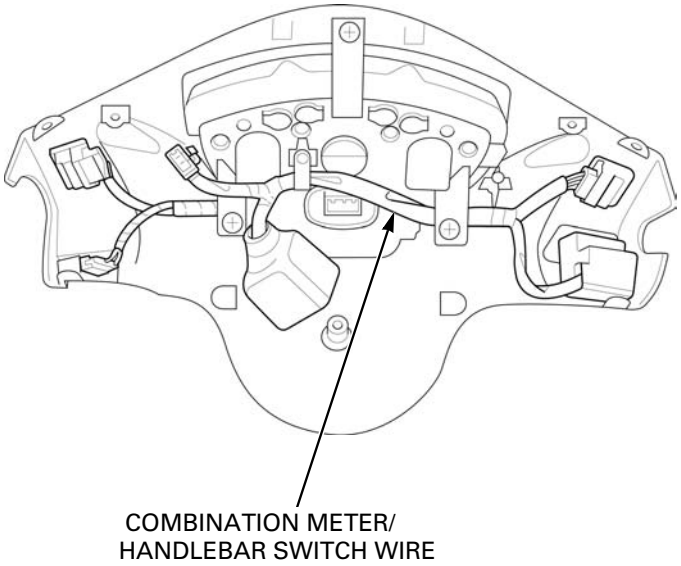

(1) COMBINATION METER/ HANDLEBAR SWITCH WIRE
(2) FRONT BRAKE HOSE
(3) REAR BRAKE HOSE
(4) LEFT FRONT TURN SIGNAL /POSITION LIGHT WIRE
(5) HORN WIRE
(6) ACCESSORY SOCKET WIRE

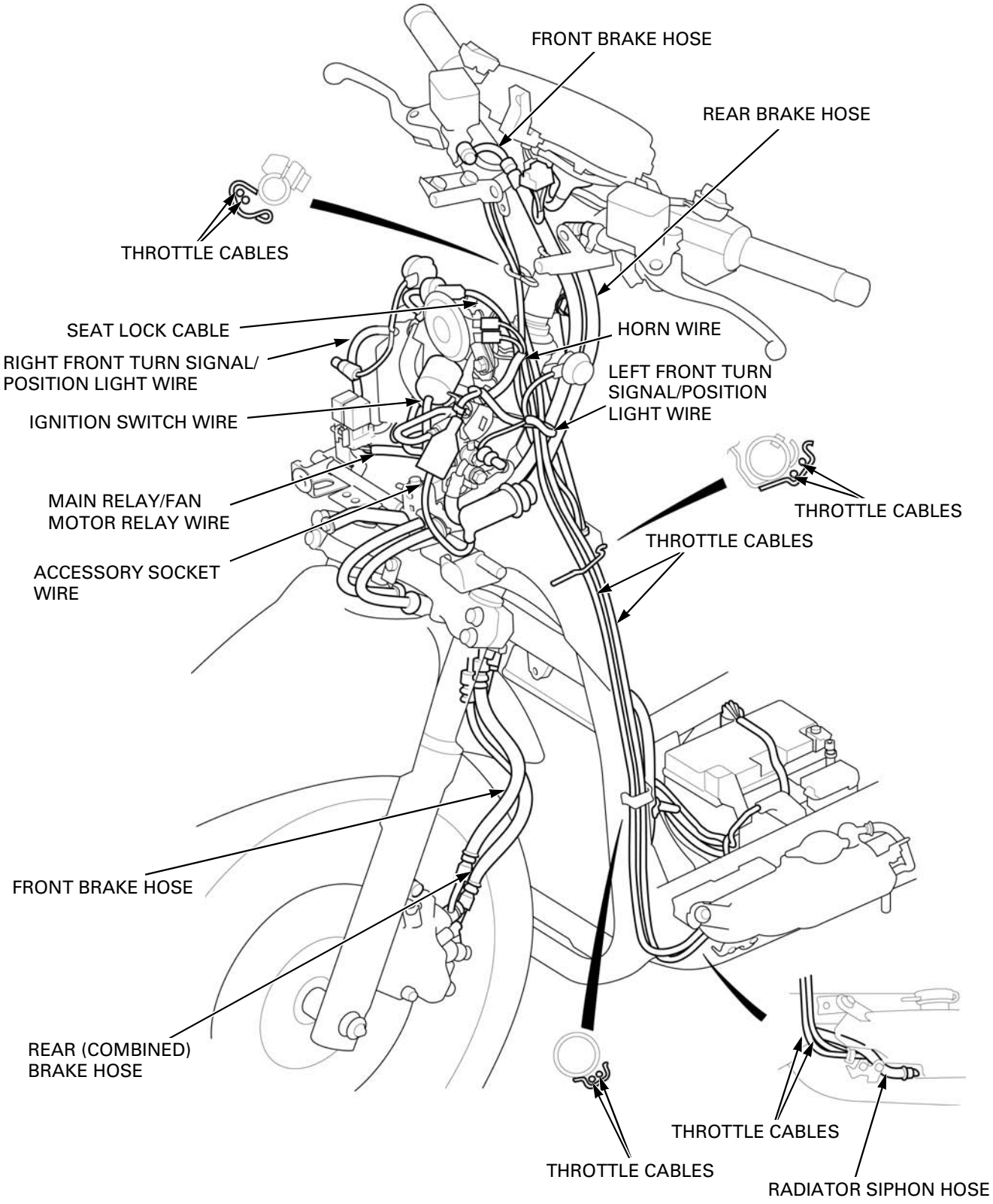
FRONT BRAKE HOSE
REAR BRAKE HOSE
THROTTLE CABLES
SEAT LOCK CABLE
HORN WIRE
RIGHT FRONT TURN SIGNAL/
POSITION LIGHT WIRE
LEFT FRONT TURN
SIGNAL/POSITION
LIGHT WIRE
IGNITION SWITCH WIRE
MAIN RELAY/FAN
MOTOR RELAY WIRE
THROTTLE CABLES
THROTTLE CABLES
ACCESSORY SOCKET
WIRE
FRONT BRAKE HOSE
REAR (COMBINED)
BRAKE HOSE
THROTTLE CABLES
THROTTLE CABLES
RADIATOR SIPHON HOSE

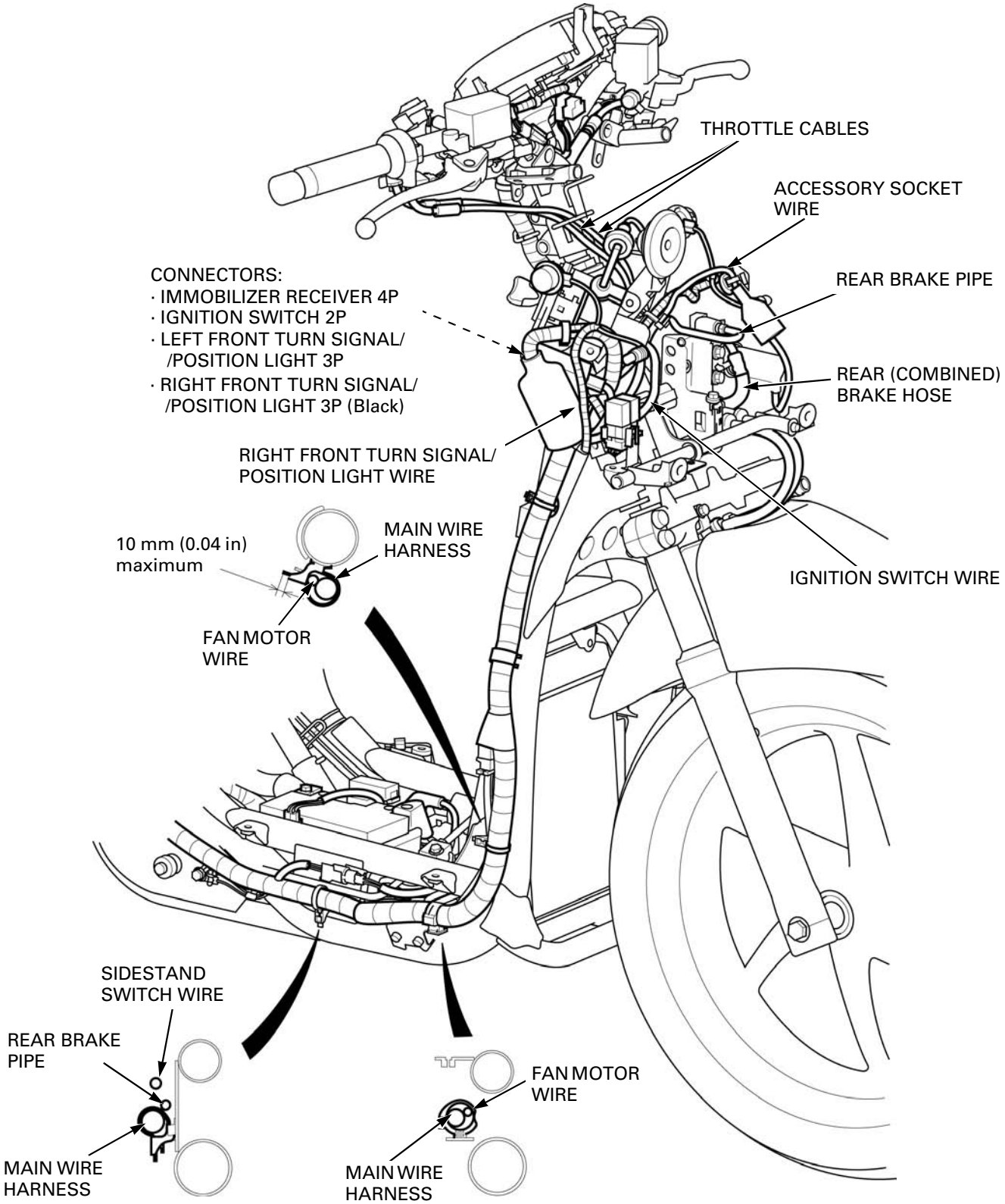
THROTTLE CABLES
ACCESSORY SOCKET WIRE
CONNECTORS:
· IMMOBILIZER RECEIVER 4P
· IGNITION SWITCH 2P
· LEFT FRONT TURN SIGNAL/ /POSITION LIGHT 3P
· RIGHT FRONT TURN SIGNAL/ /POSITION LIGHT 3P (Black)
REAR BRAKE PIPE
REAR (COMBINED) BRAKE HOSE
RIGHT FRONT TURN SIGNAL/ POSITION LIGHT WIRE
10 mm (0.04 in) maximum
MAIN WIRE HARNESS
IGNITION SWITCH WIRE
FAN MOTOR WIRE
SIDESTAND SWITCH WIRE
REAR BRAKE PIPE
FAN MOTOR WIRE
MAIN WIRE HARNESS
MAIN WIRE HARNESS

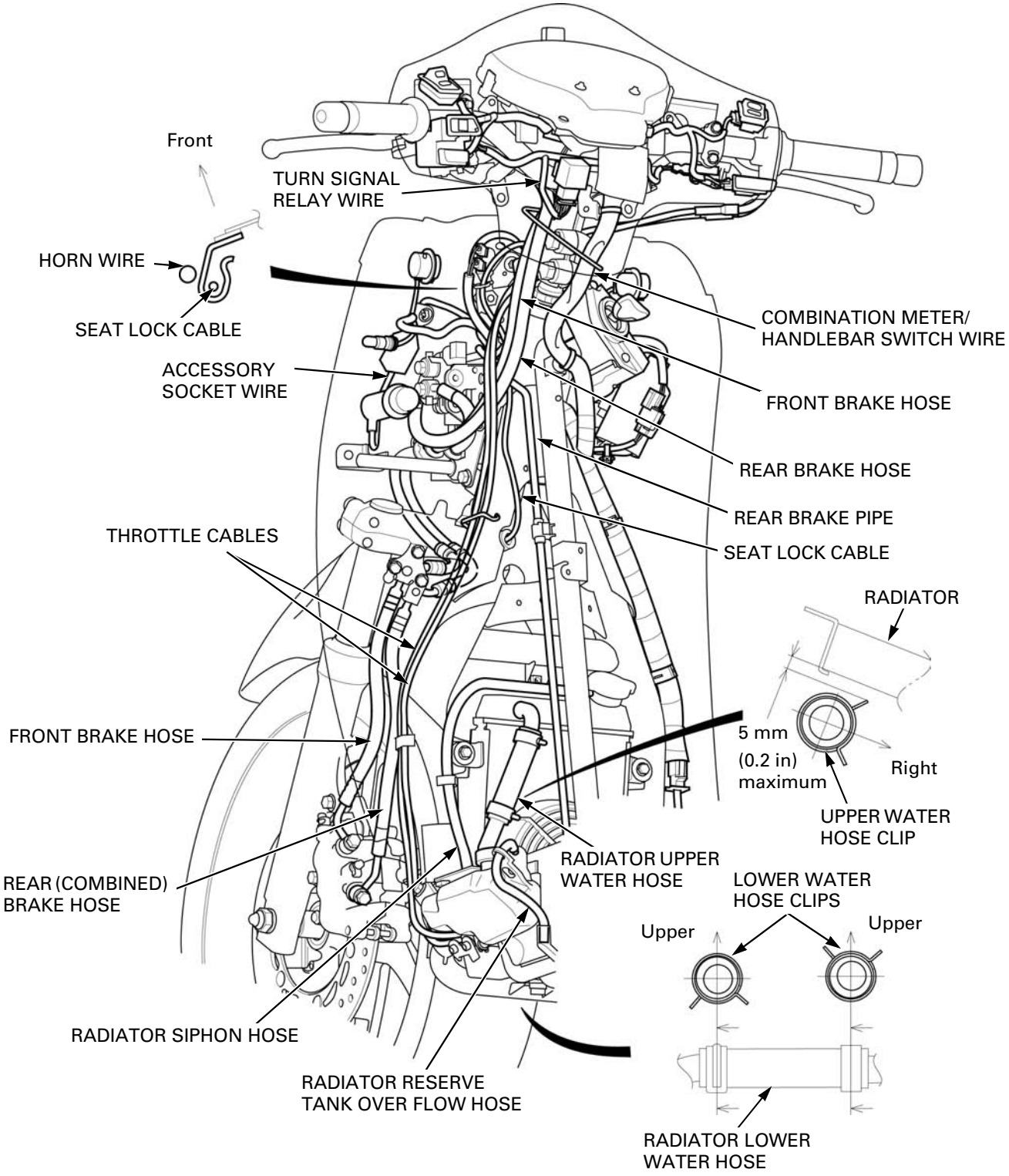
Front
TURN SIGNAL RELAY WIRE
HORN WIRE
SEAT LOCK CABLE
ACCESSORY SOCKET WIRE
COMBINATION METER/ HANDLEBAR SWITCH WIRE
FRONT BRAKE HOSE
REAR BRAKE HOSE
REAR BRAKE PIPE
SEAT LOCK CABLE
THROTTLE CABLES
RADIATOR
FRONT BRAKE HOSE
5 mm
(0.2 in)
maximum
Right
UPPER WATER HOSE CLIP
REAR (COMBINED) BRAKE HOSE
RADIATOR UPPER WATER HOSE
LOWER WATER HOSE CLIPS
Upper
Upper
RADIATOR SIPHON HOSE
RADIATOR RESERVE TANK OVER FLOW HOSE
RADIATOR LOWER WATER HOSE

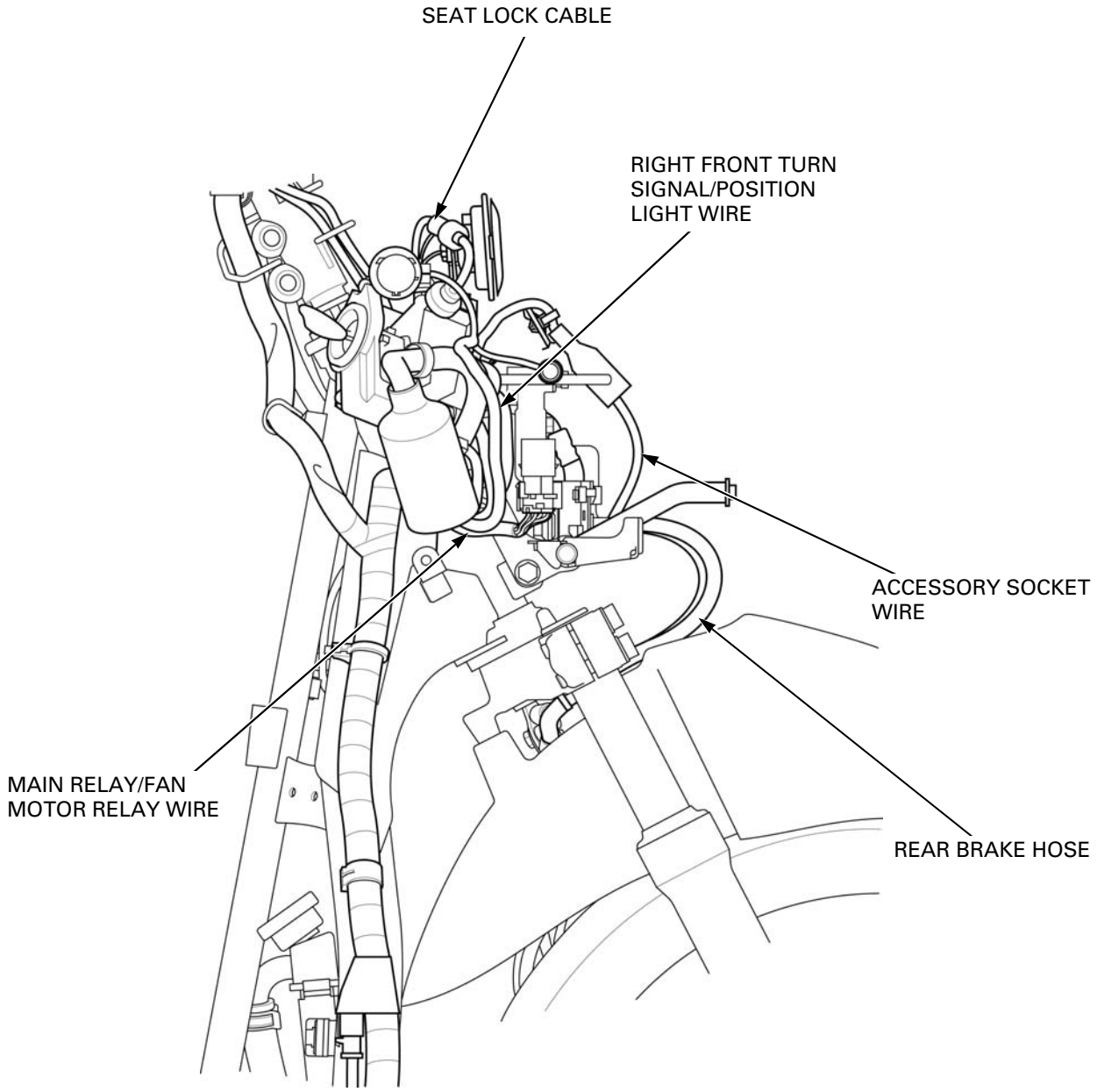
SEAT LOCK CABLE
RIGHT FRONT TURN SIGNAL/POSITION LIGHT WIRE
ACCESSORY SOCKET WIRE
MAIN RELAY/FAN MOTOR RELAY WIRE
REAR BRAKE HOSE

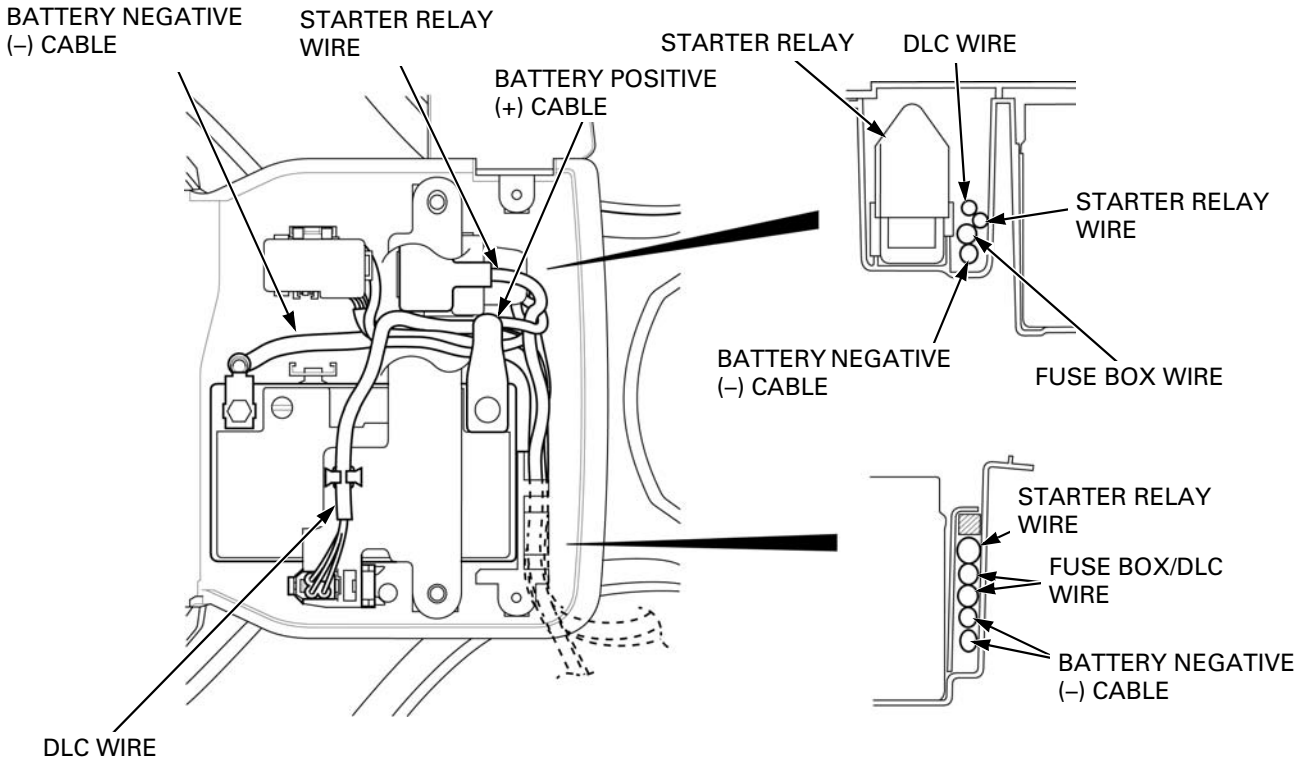
BATTERY NEGATIVE
(–) CABLE
STARTER RELAY
WIRE
BATTERY POSITIVE
(+) CABLE
STARTER RELAY
DLC WIRE
STARTER RELAY
WIRE
BATTERY NEGATIVE
(–) CABLE
FUSE BOX WIRE
STARTER RELAY
WIRE
FUSE BOX/DLC
WIRE
BATTERY NEGATIVE
(–) CABLE
DLC WIRE

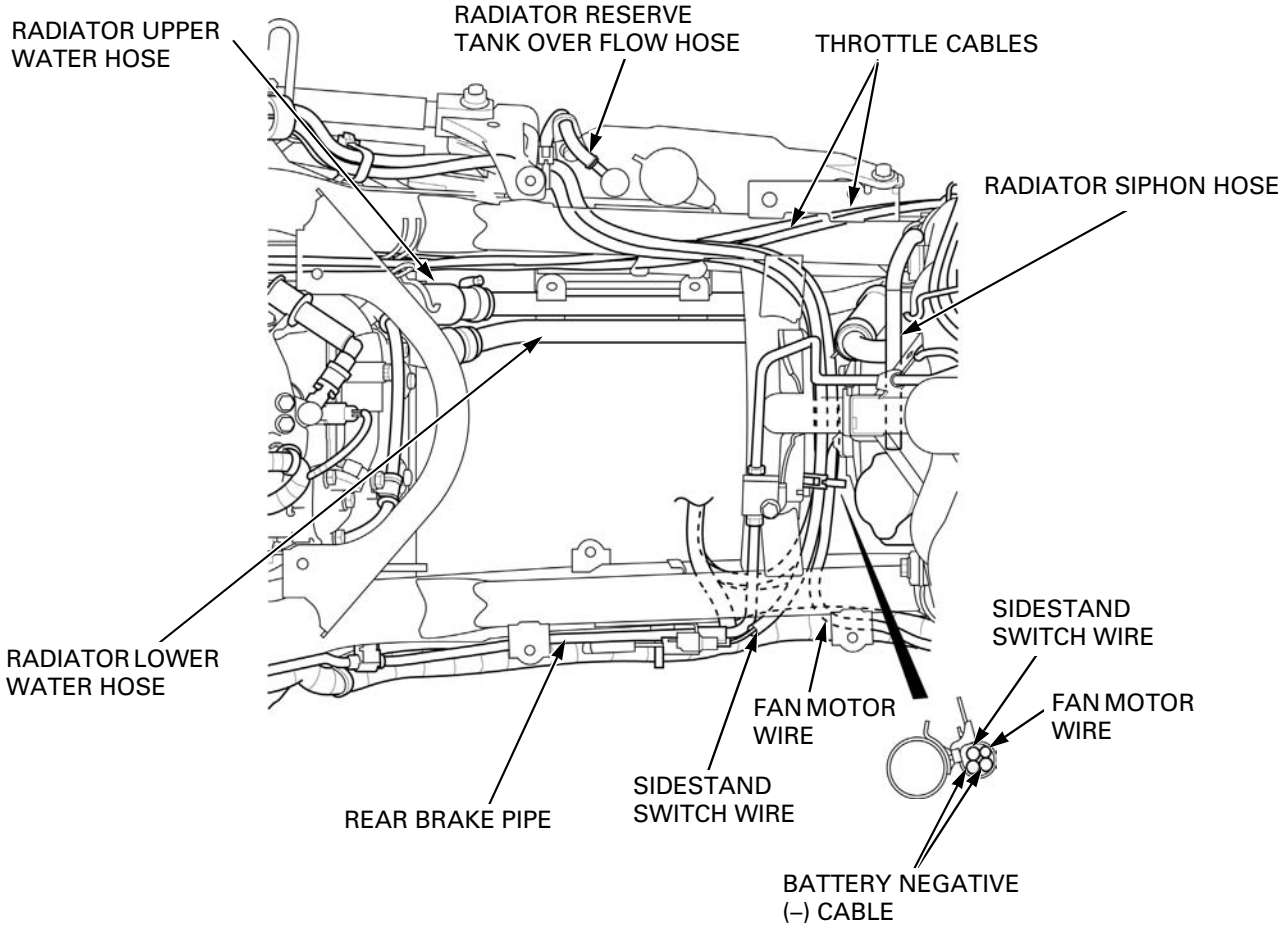
RADIATOR UPPER
WATER HOSE
RADIATOR RESERVE
TANK OVER FLOW HOSE
THROTTLE CABLES
RADIATOR SIPHON HOSE
SIDESTAND
SWITCH WIRE
RADIATOR LOWER
WATER HOSE
FAN MOTOR
WIRE
FAN MOTOR
WIRE
SIDESTAND
SWITCH WIRE
REAR BRAKE PIPE
BATTERY NEGATIVE
(–) CABLE

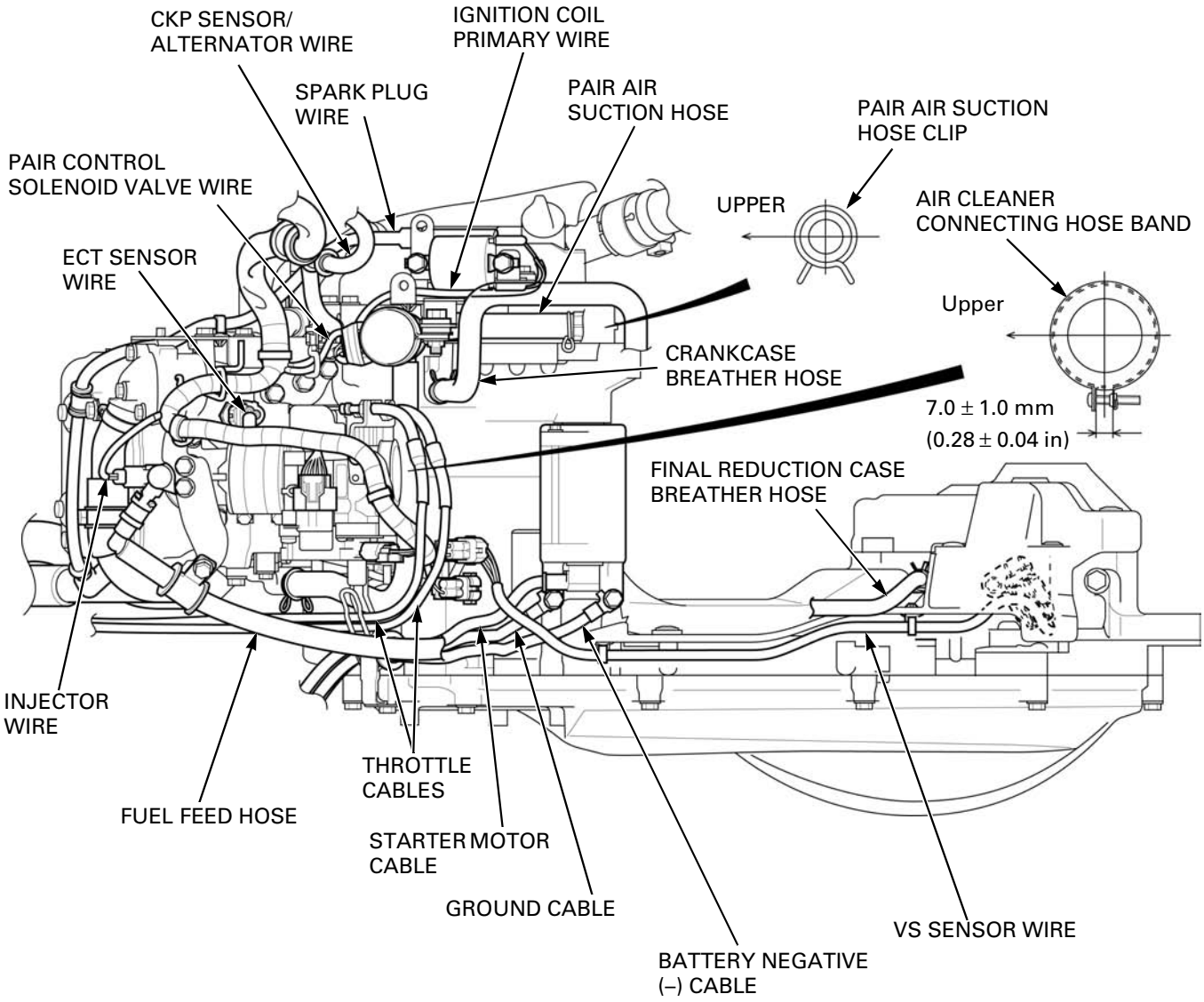
CKP SENSOR/
ALTERNATOR WIRE
IGNITION COIL
PRIMARY WIRE
SPARK PLUG
WIRE
PAIR AIR
SUCTION HOSE
PAIR AIR SUCTION
HOSE CLIP
PAIR CONTROL
SOLENOID VALVE WIRE
UPPER
AIR CLEANER
CONNECTING HOSE BAND
ECT SENSOR
WIRE
Upper
CRANKCASE
BREATHER HOSE
7.0 ± 1.0 mm
(0.28 ± 0.04 in)
FINAL REDUCTION CASE
BREATHER HOSE
INJECTOR
WIRE
THROTTLE
CABLES
FUEL FEED HOSE
STARTER MOTOR
CABLE
GROUND CABLE
VS SENSOR WIRE
BATTERY NEGATIVE
(–) CABLE

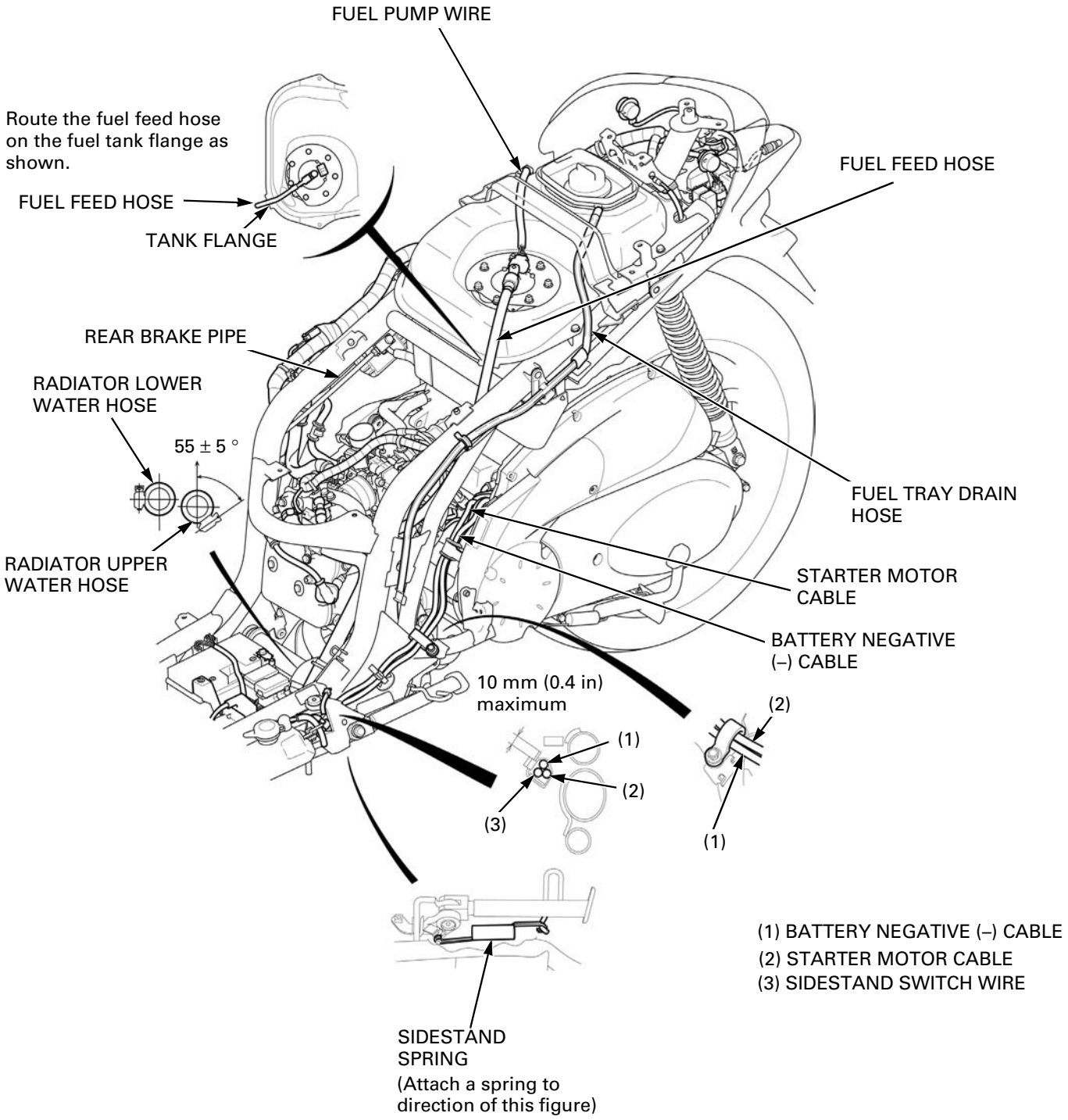
FUEL PUMP WIRE
Route the fuel feed hose on the fuel tank flange as shown.
FUEL FEED HOSE
TANK FLANGE
FUEL FEED HOSE
REAR BRAKE PIPE
RADIATOR LOWER WATER HOSE
55 ± 5 °
RADIATOR UPPER WATER HOSE
FUEL TRAY DRAIN HOSE
STARTER MOTOR CABLE
BATTERY NEGATIVE (–) CABLE
10 mm (0.4 in) maximum
(1)
(2)
(3)
(2)
(1)
(1) BATTERY NEGATIVE (–) CABLE
(2) STARTER MOTOR CABLE
(3) SIDESTAND SWITCH WIRE
SIDESTAND SPRING
(Attach a spring to direction of this figure)

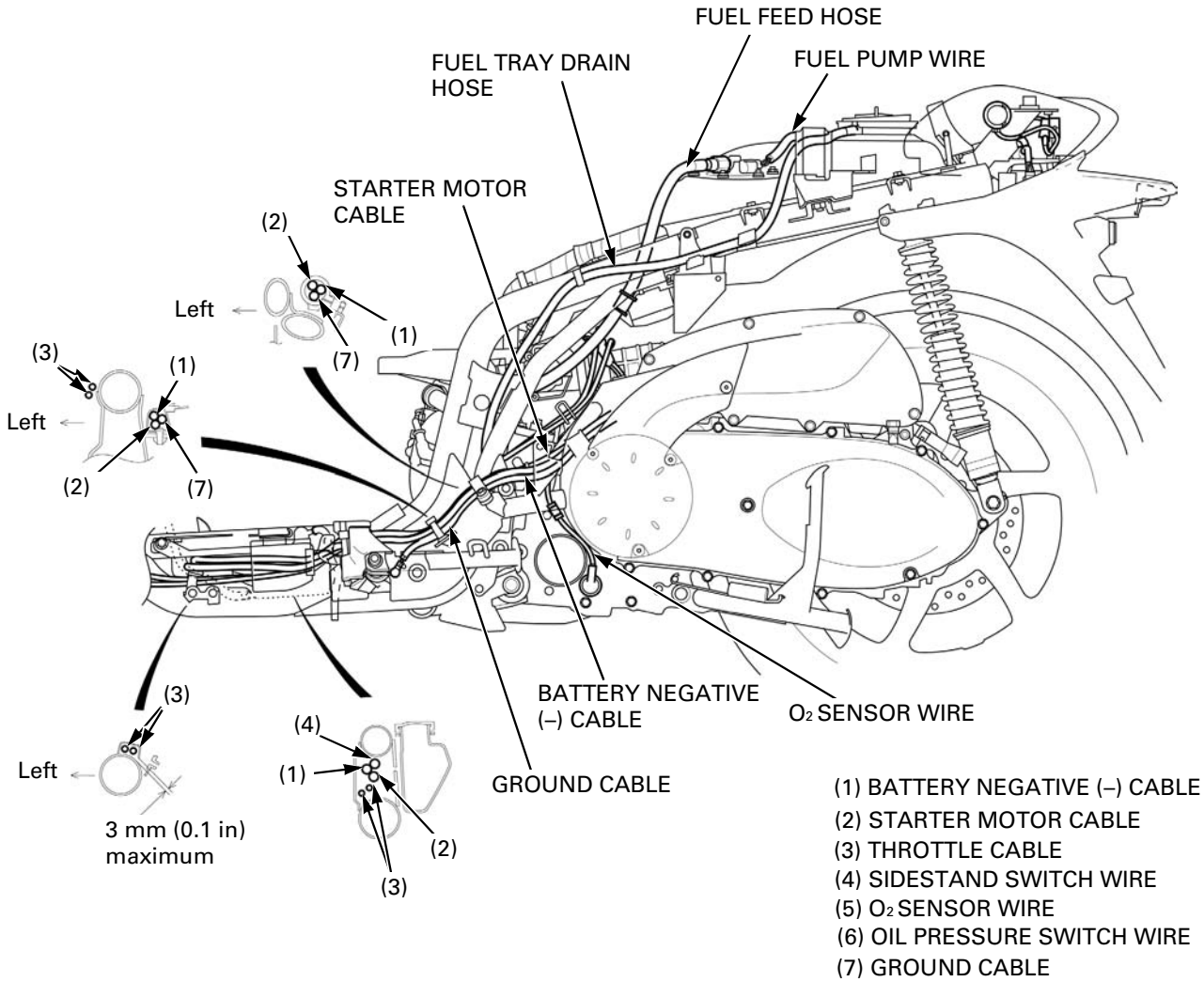

(1) BATTERY NEGATIVE (–) CABLE
(2) STARTER MOTOR CABLE
(3) THROTTLE CABLE
(4) SIDESTAND SWITCH WIRE
(5) O_2 SENSOR WIRE
(6) OIL PRESSURE SWITCH WIRE
(7) GROUND CABLE

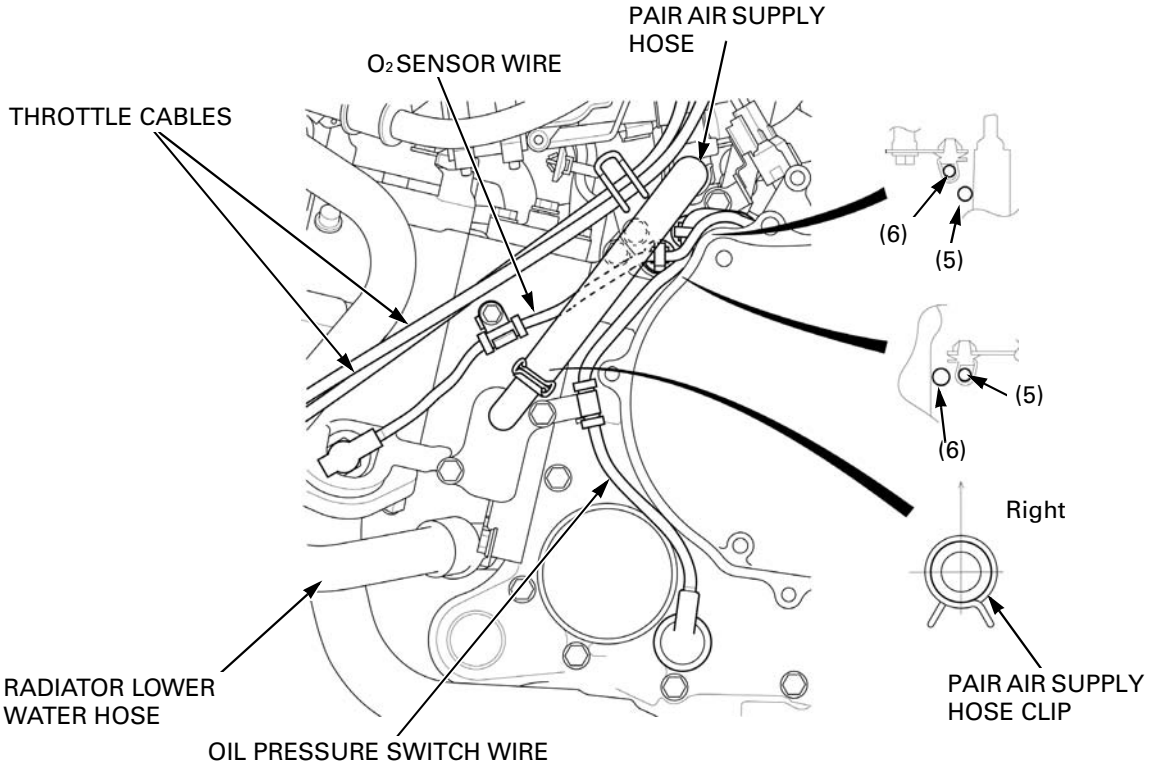

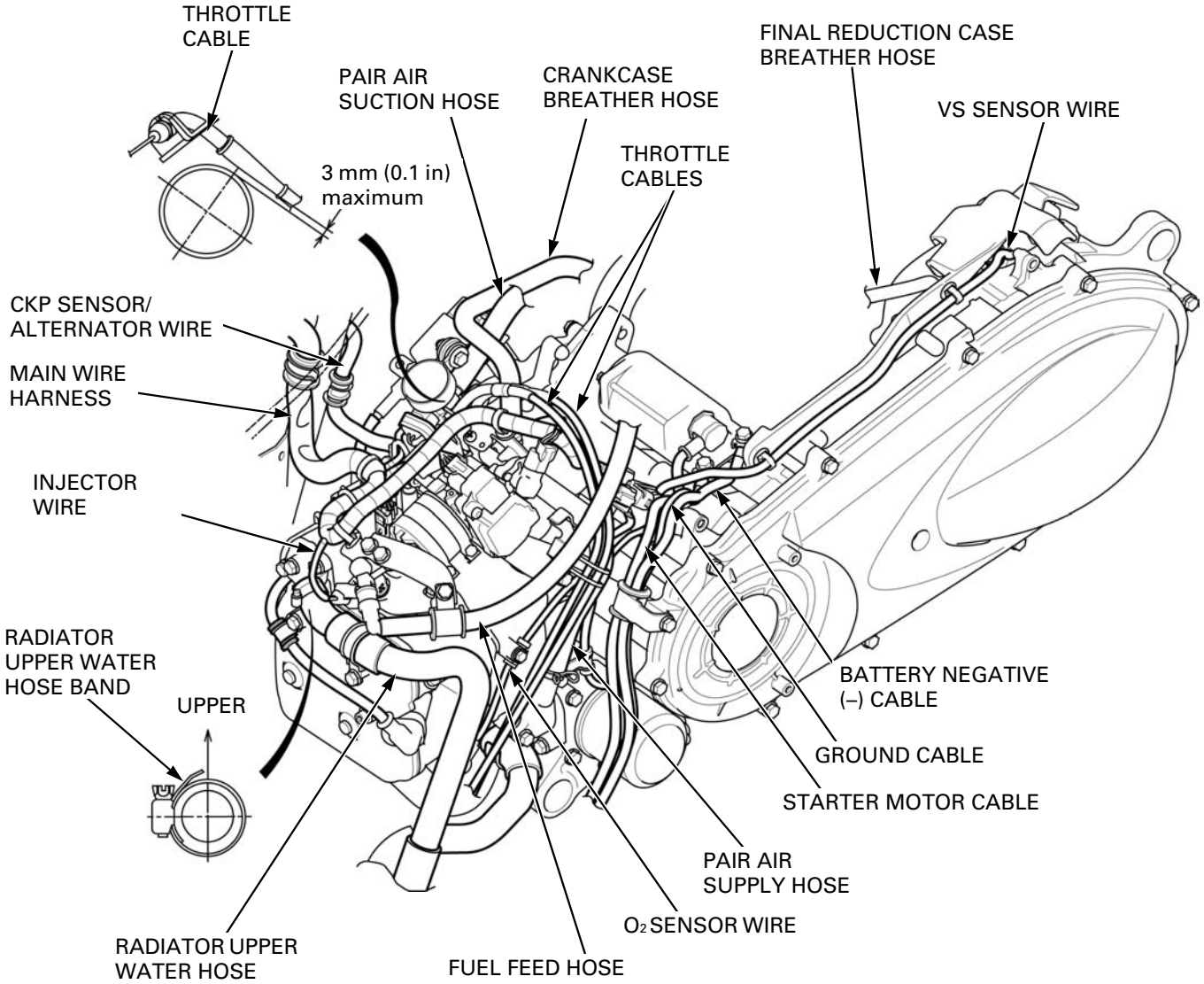
THROTTLE CABLE
3 mm (0.1 in) maximum
PAIR AIR SUCTION HOSE
CRANKCASE BREATHER HOSE
THROTTLE CABLES
FINAL REDUCTION CASE BREATHER HOSE
VS SENSOR WIRE
CKP SENSOR/ ALTERNATOR WIRE
MAIN WIRE HARNESS
INJECTOR WIRE
RADIATOR UPPER WATER HOSE BAND
UPPER
BATTERY NEGATIVE (–) CABLE
GROUND CABLE
STARTER MOTOR CABLE
PAIR AIR SUPPLY HOSE
O2 SENSOR WIRE
RADIATOR UPPER WATER HOSE
FUEL FEED HOSE

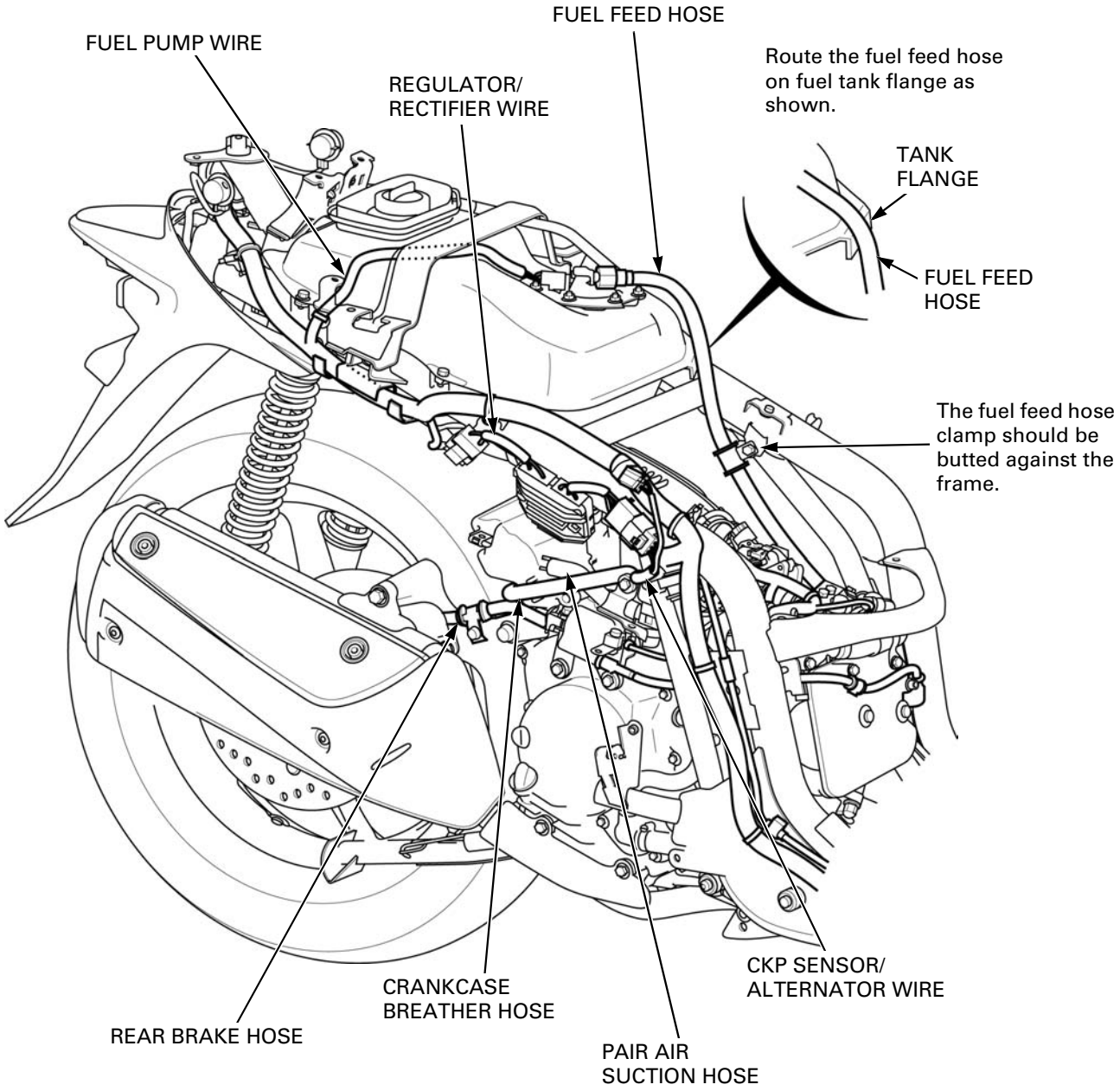
FUEL FEED HOSE
FUEL PUMP WIRE
Route the fuel feed hose on fuel tank flange as shown.
REGULATOR/ RECTIFIER WIRE
TANK FLANGE
FUEL FEED HOSE
The fuel feed hose clamp should be butted against the frame.
CKP SENSOR/ ALTERNATOR WIRE
CRANKCASE BREATHER HOSE
REAR BRAKE HOSE
PAIR AIR SUCTION HOSE

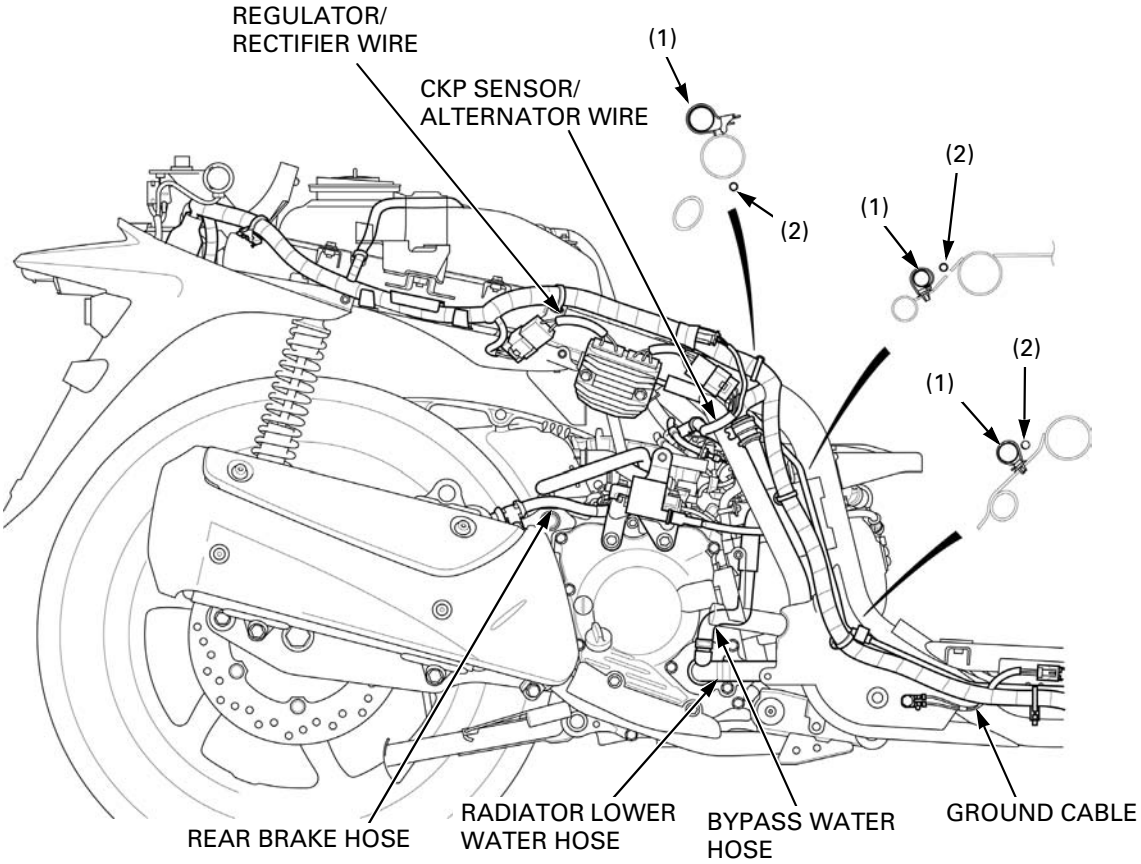

(1) MAIN WIRE HARNESS
(2) REAR BRAKE PIPE

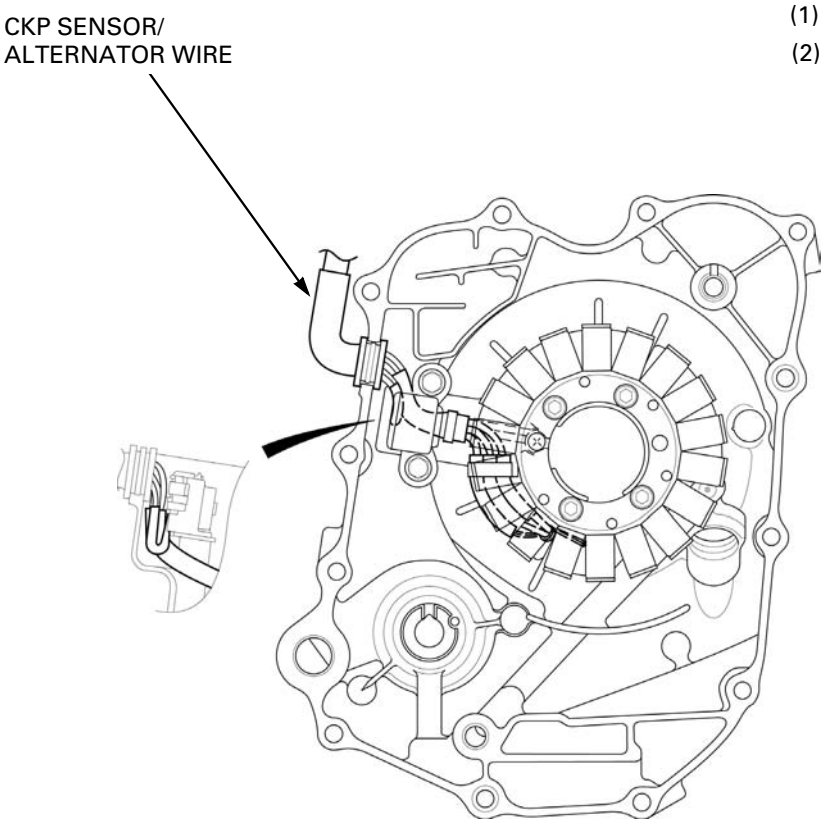

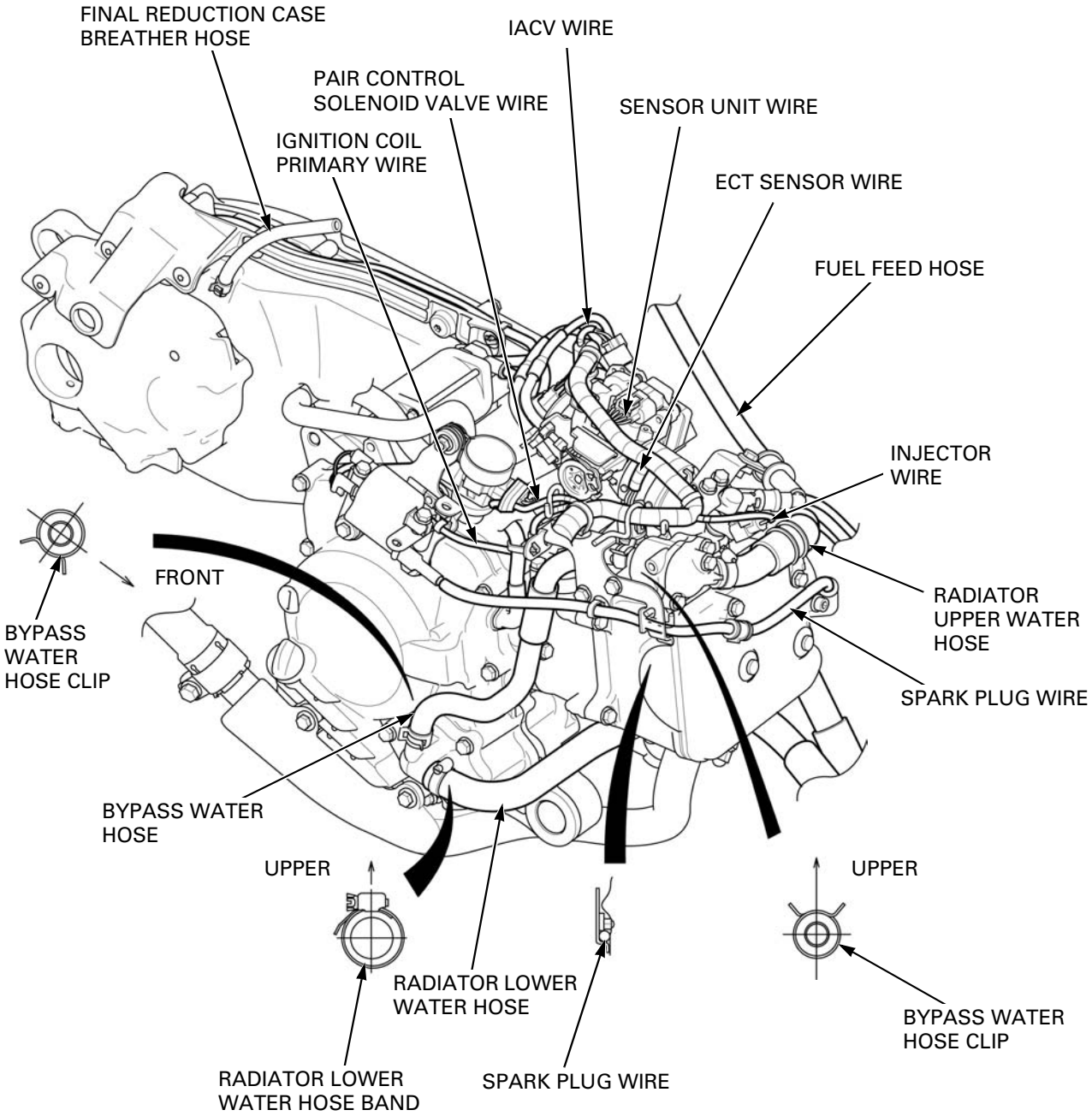
FINAL REDUCTION CASE
BREATHER HOSE
IACV WIRE
PAIR CONTROL
SOLENOID VALVE WIRE
SENSOR UNIT WIRE
IGNITION COIL
PRIMARY WIRE
ECT SENSOR WIRE
FUEL FEED HOSE
INJECTOR
WIRE
FRONT
BYPASS
WATER
HOSE CLIP
RADIATOR
UPPER WATER
HOSE
SPARK PLUG WIRE
BYPASS WATER
HOSE
UPPER
UPPER
RADIATOR LOWER
WATER HOSE
BYPASS WATER
HOSE CLIP
RADIATOR LOWER
WATER HOSE BAND
SPARK PLUG WIRE

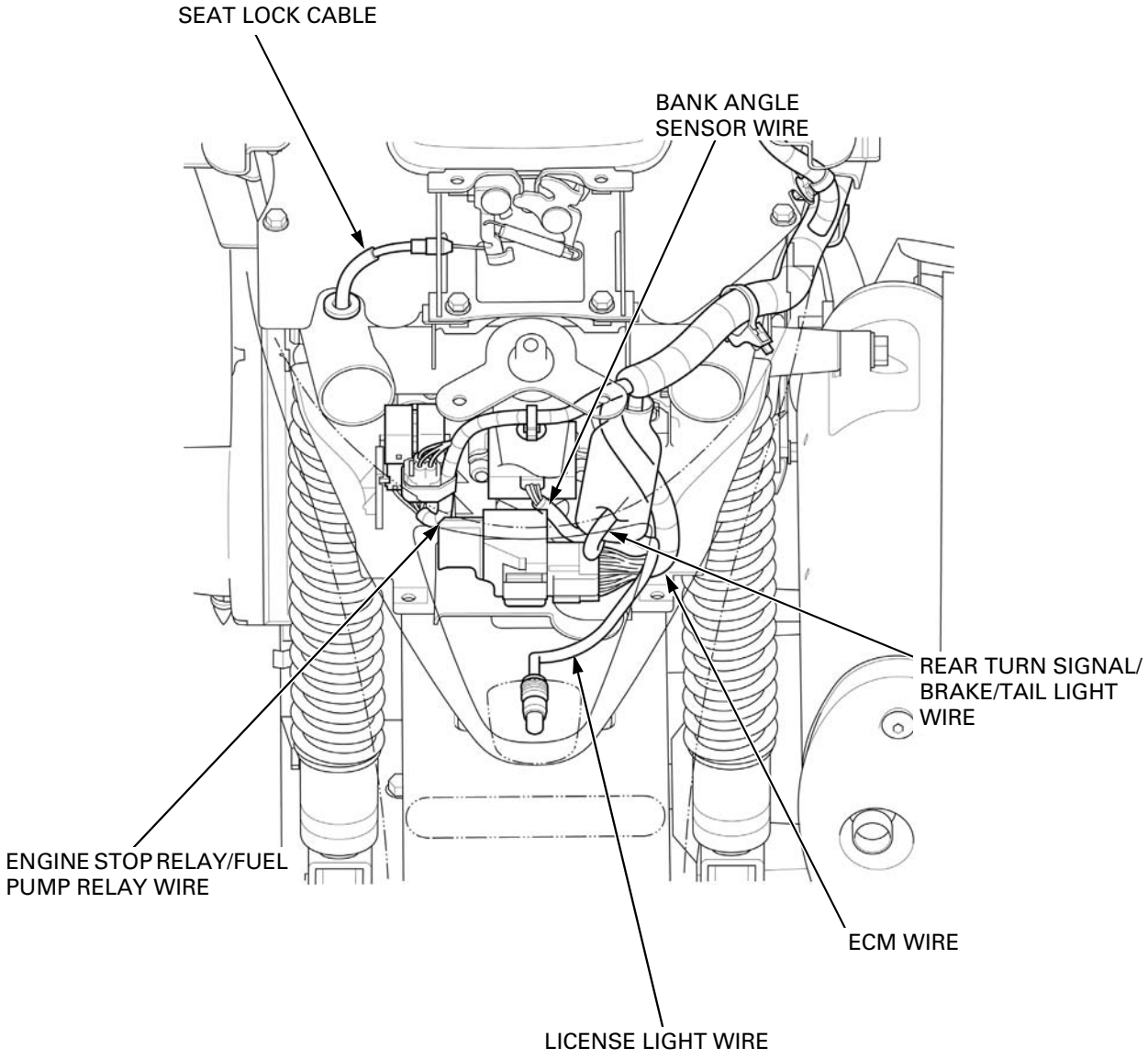
SEAT LOCK CABLE
BANK ANGLE SENSOR WIRE
REAR TURN SIGNAL/ BRAKE/TAIL LIGHT WIRE
ENGINE STOP RELAY/FUEL PUMP RELAY WIRE
ECM WIRE
LICENSE LIGHT WIRE

ABS TYPE

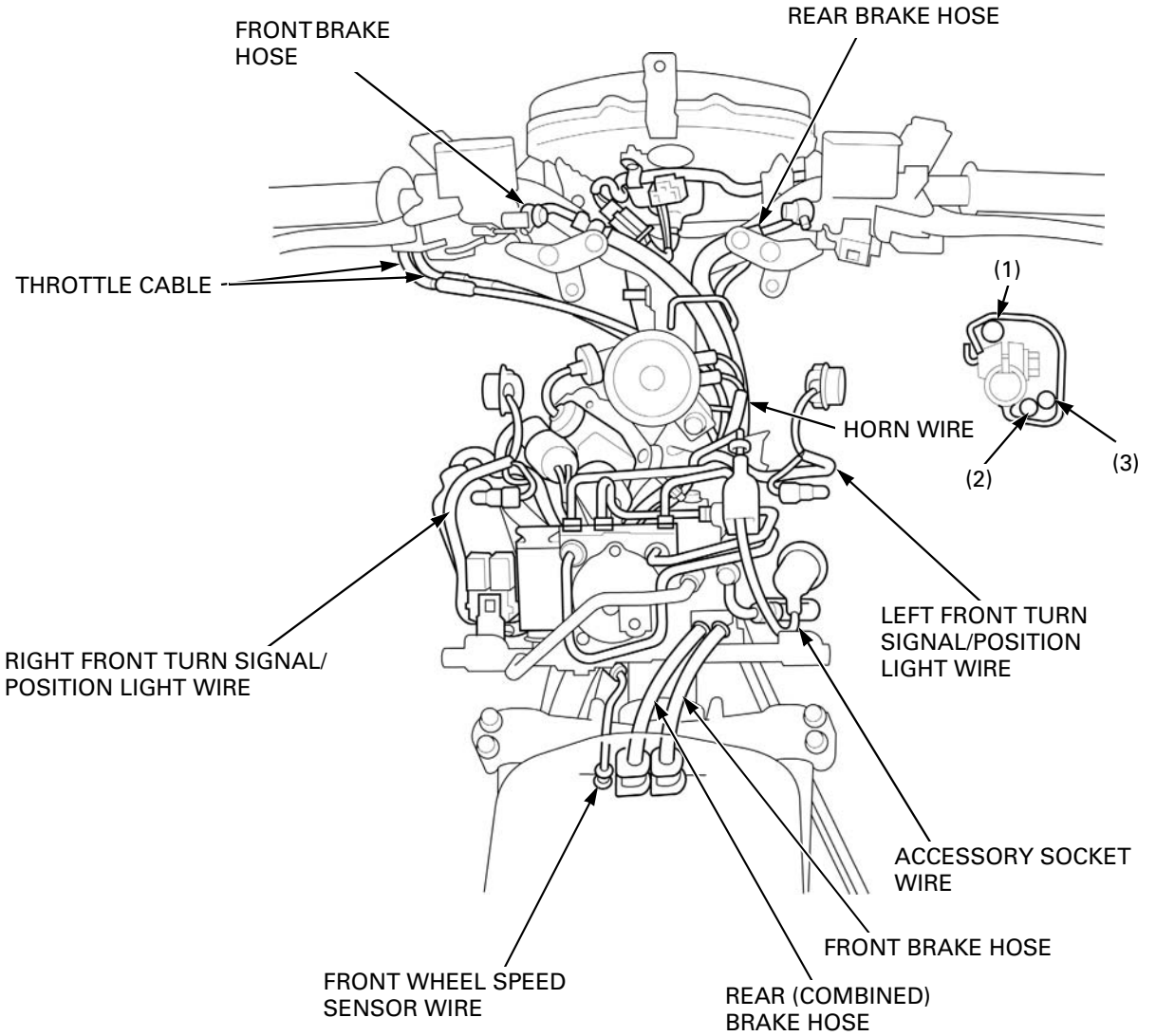

(1) COMBINATION METER/ HANDLEBAR SWITCH WIRE

(2) FRONT BRAKE HOSE

(3) REAR BRAKE HOSE

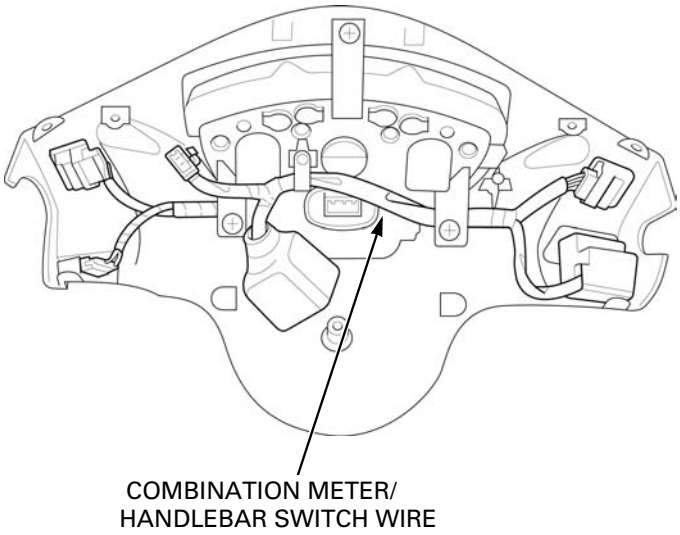

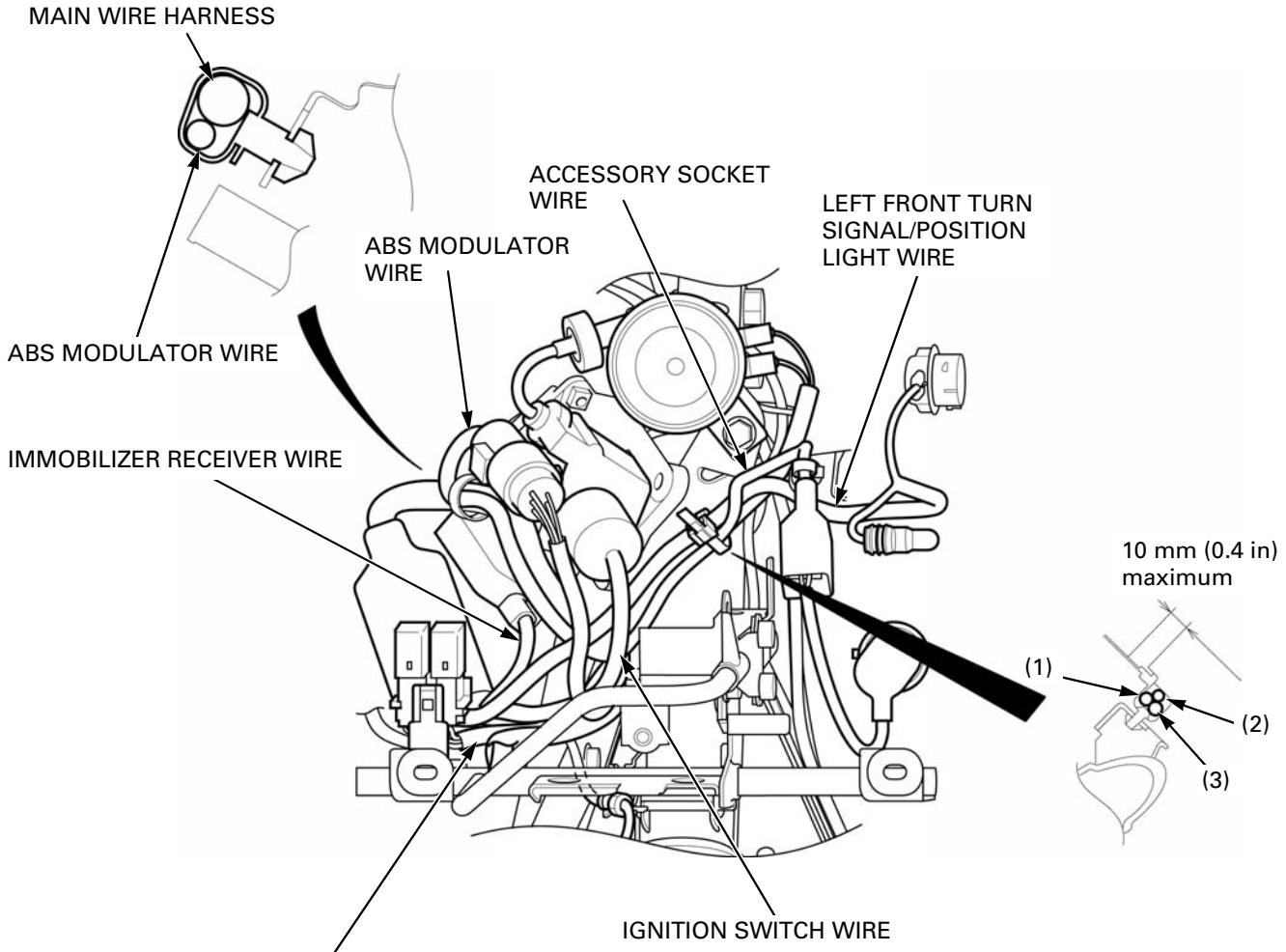

(1) LEFT FRONT TURN SIGNAL /POSITION LIGHT WIRE
(2) HORN WIRE
(3) ACCESSORY SOCKET WIRE

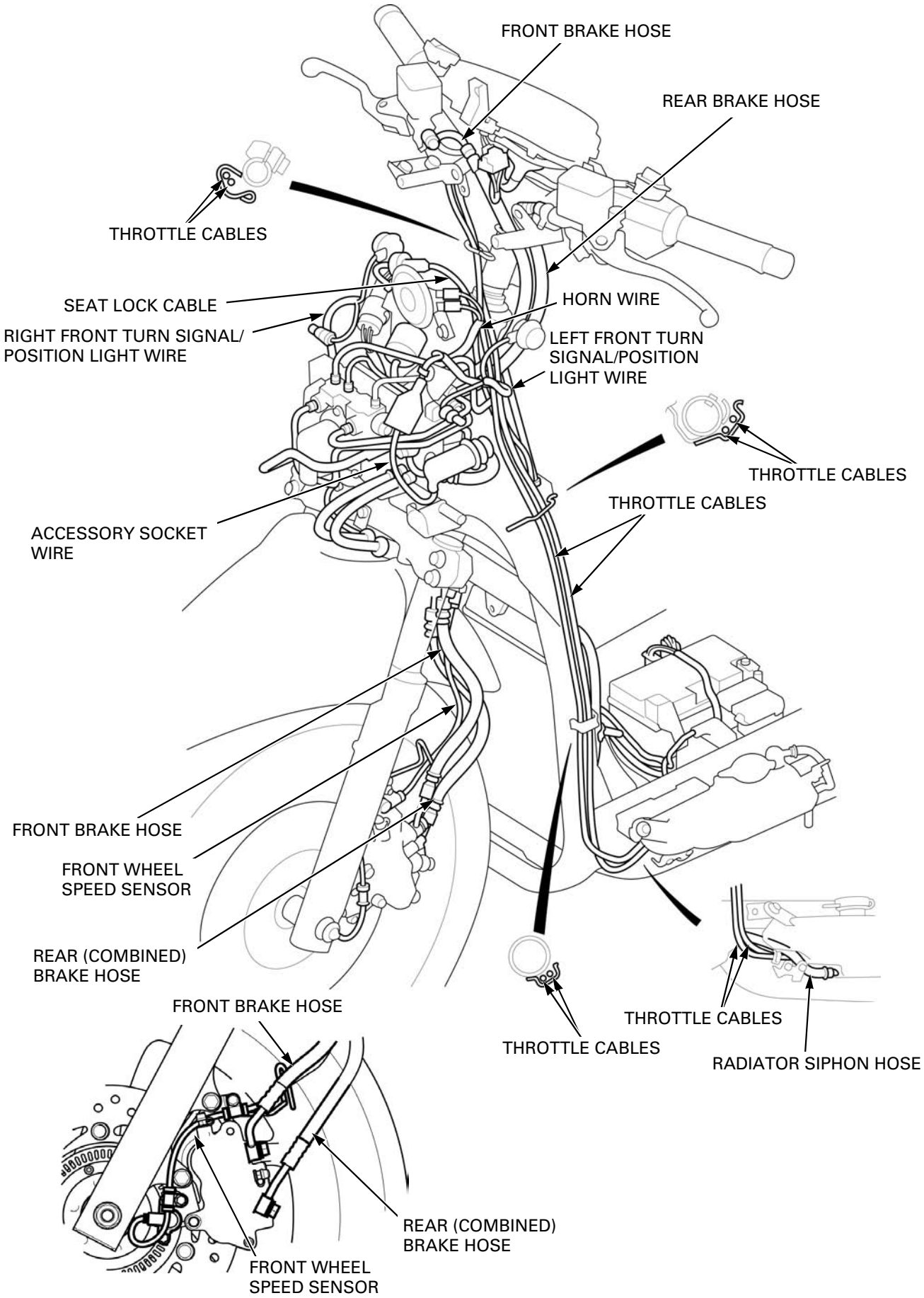
FRONT BRAKE HOSE
REAR BRAKE HOSE
THROTTLE CABLES
SEAT LOCK CABLE
HORN WIRE
RIGHT FRONT TURN SIGNAL/
POSITION LIGHT WIRE
LEFT FRONT TURN
SIGNAL/POSITION
LIGHT WIRE
THROTTLE CABLES
THROTTLE CABLES
ACCESSORY SOCKET
WIRE
FRONT BRAKE HOSE
FRONT WHEEL
SPEED SENSOR
REAR (COMBINED)
BRAKE HOSE
FRONT BRAKE HOSE
THROTTLE CABLES
THROTTLE CABLES
RADIATOR SIPHON HOSE
REAR (COMBINED)
BRAKE HOSE
FRONT WHEEL
SPEED SENSOR

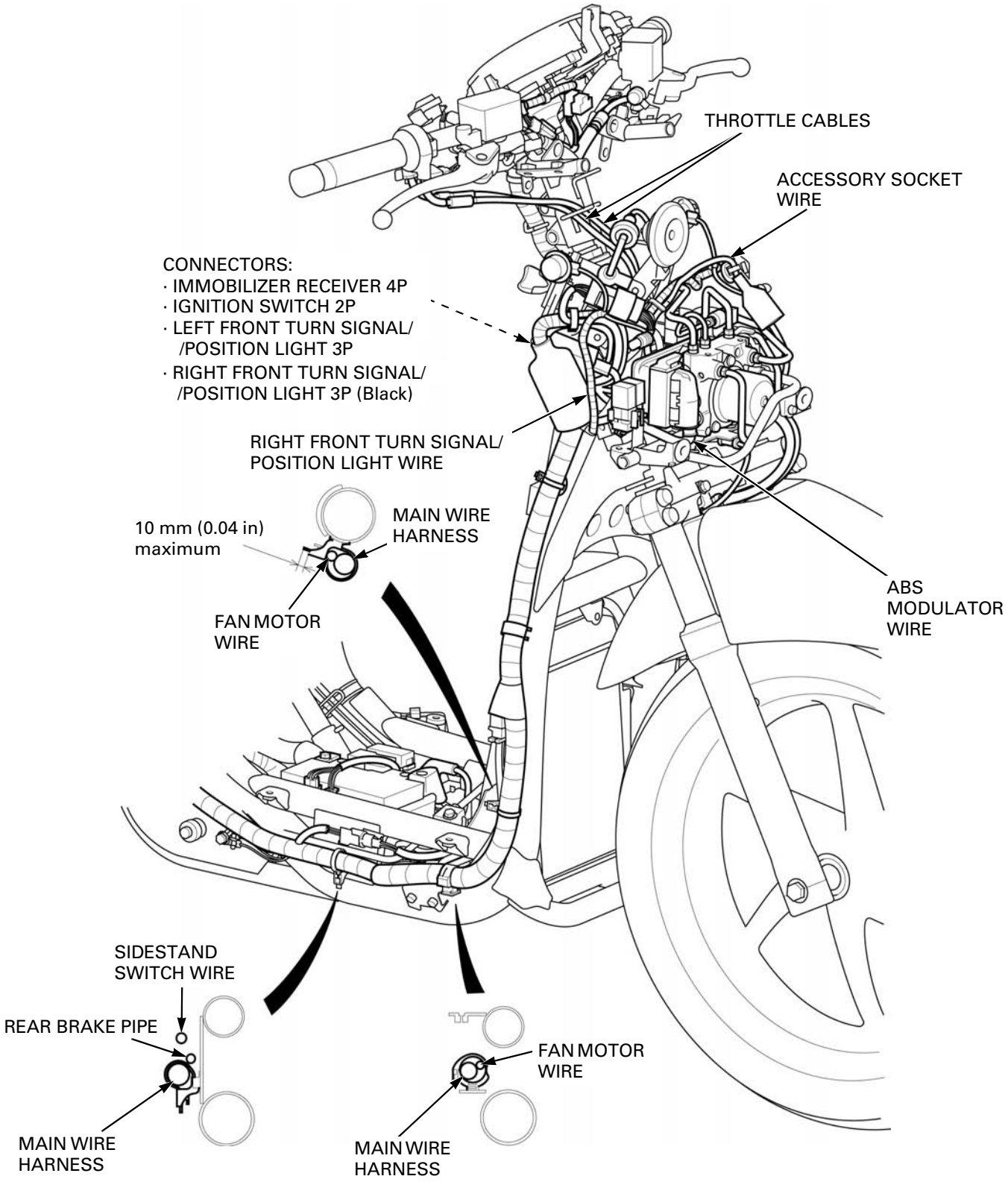
THROTTLE CABLES
ACCESSORY SOCKET WIRE
CONNECTORS:
· IMMOBILIZER RECEIVER 4P
· IGNITION SWITCH 2P
· LEFT FRONT TURN SIGNAL/ /POSITION LIGHT 3P
· RIGHT FRONT TURN SIGNAL/ /POSITION LIGHT 3P (Black)
RIGHT FRONT TURN SIGNAL/ POSITION LIGHT WIRE
10 mm (0.04 in) maximum
MAIN WIRE HARNESS
FAN MOTOR WIRE
ABS MODULATOR WIRE
SIDESTAND SWITCH WIRE
REAR BRAKE PIPE
FAN MOTOR WIRE
MAIN WIRE HARNESS
MAIN WIRE HARNESS

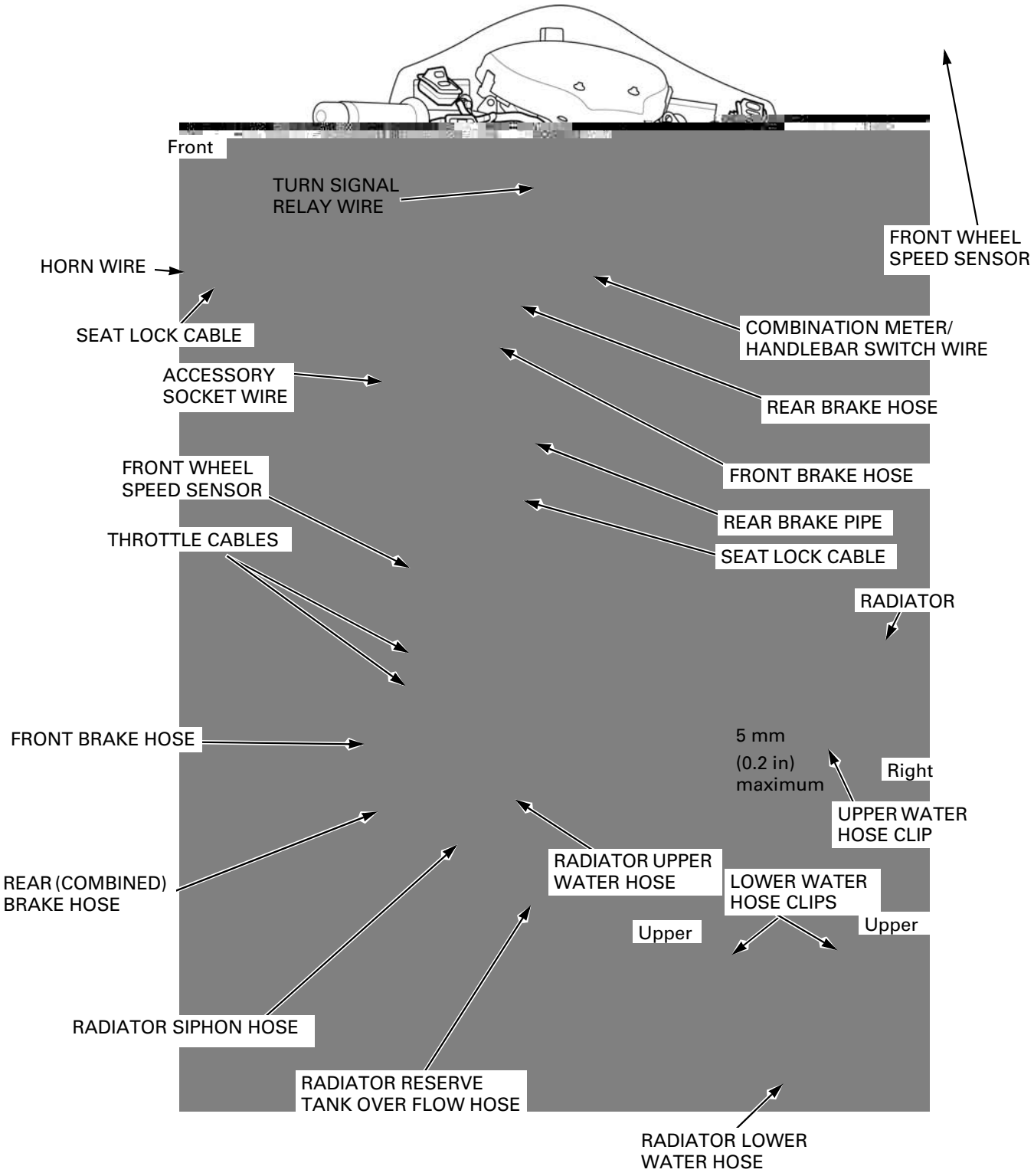
Front
TURN SIGNAL RELAY WIRE
FRONT WHEEL SPEED SENSOR
HORN WIRE
SEAT LOCK CABLE
COMBINATION METER/ HANDLEBAR SWITCH WIRE
ACCESSORY SOCKET WIRE
REAR BRAKE HOSE
FRONT WHEEL SPEED SENSOR
FRONT BRAKE HOSE
REAR BRAKE PIPE
THROTTLE CABLES
SEAT LOCK CABLE
RADIATOR
FRONT BRAKE HOSE
5 mm (0.2 in) maximum
Right
UPPER WATER HOSE CLIP
REAR (COMBINED) BRAKE HOSE
RADIATOR UPPER WATER HOSE
LOWER WATER HOSE CLIPS
Upper
Upper
RADIATOR SIPHON HOSE
RADIATOR RESERVE TANK OVER FLOW HOSE
RADIATOR LOWER WATER HOSE

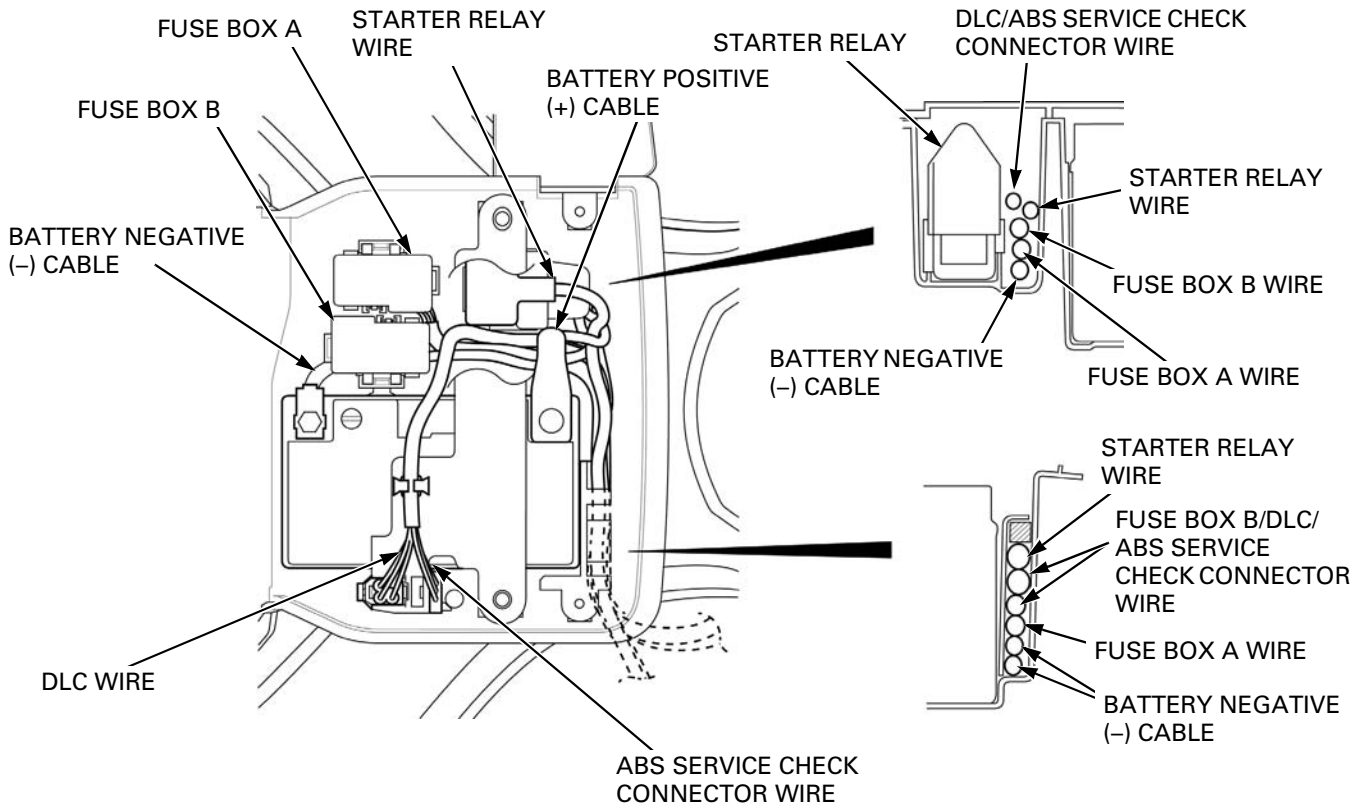
FUSE BOX A
STARTER RELAY WIRE
STARTER RELAY
DLC/ABS SERVICE CHECK CONNECTOR WIRE
BATTERY POSITIVE (+) CABLE
FUSE BOX B
STARTER RELAY WIRE
BATTERY NEGATIVE (–) CABLE
FUSE BOX B WIRE
BATTERY NEGATIVE (–) CABLE
FUSE BOX A WIRE
STARTER RELAY WIRE
FUSE BOX B/DLC/ ABS SERVICE CHECK CONNECTOR WIRE
FUSE BOX A WIRE
DLC WIRE
BATTERY NEGATIVE (–) CABLE
ABS SERVICE CHECK CONNECTOR WIRE

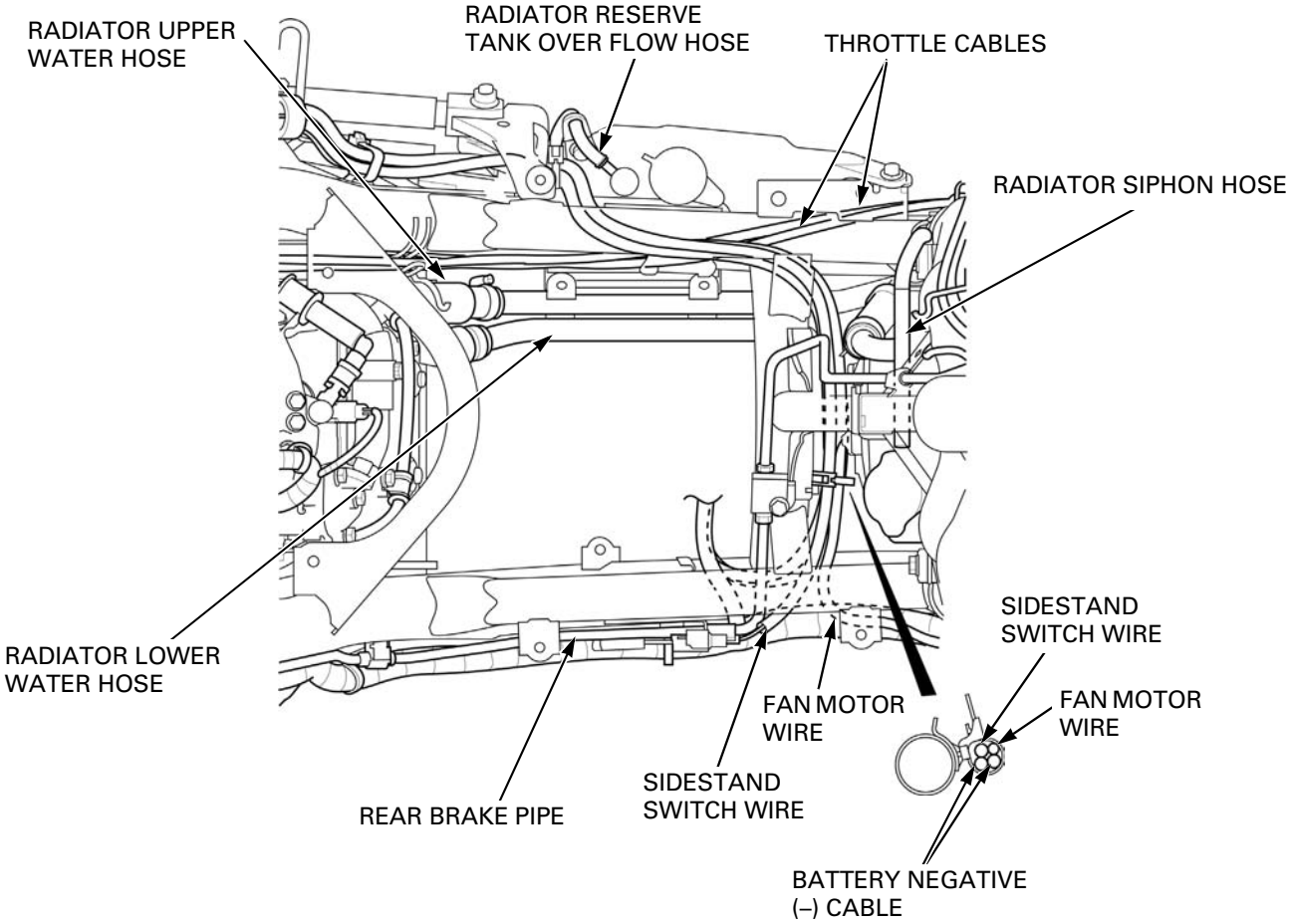
RADIATOR UPPER WATER HOSE
RADIATOR RESERVE TANK OVER FLOW HOSE
THROTTLE CABLES
RADIATOR SIPHON HOSE
SIDESTAND SWITCH WIRE
RADIATOR LOWER WATER HOSE
FAN MOTOR WIRE
FAN MOTOR WIRE
SIDESTAND SWITCH WIRE
REAR BRAKE PIPE
BATTERY NEGATIVE (–) CABLE

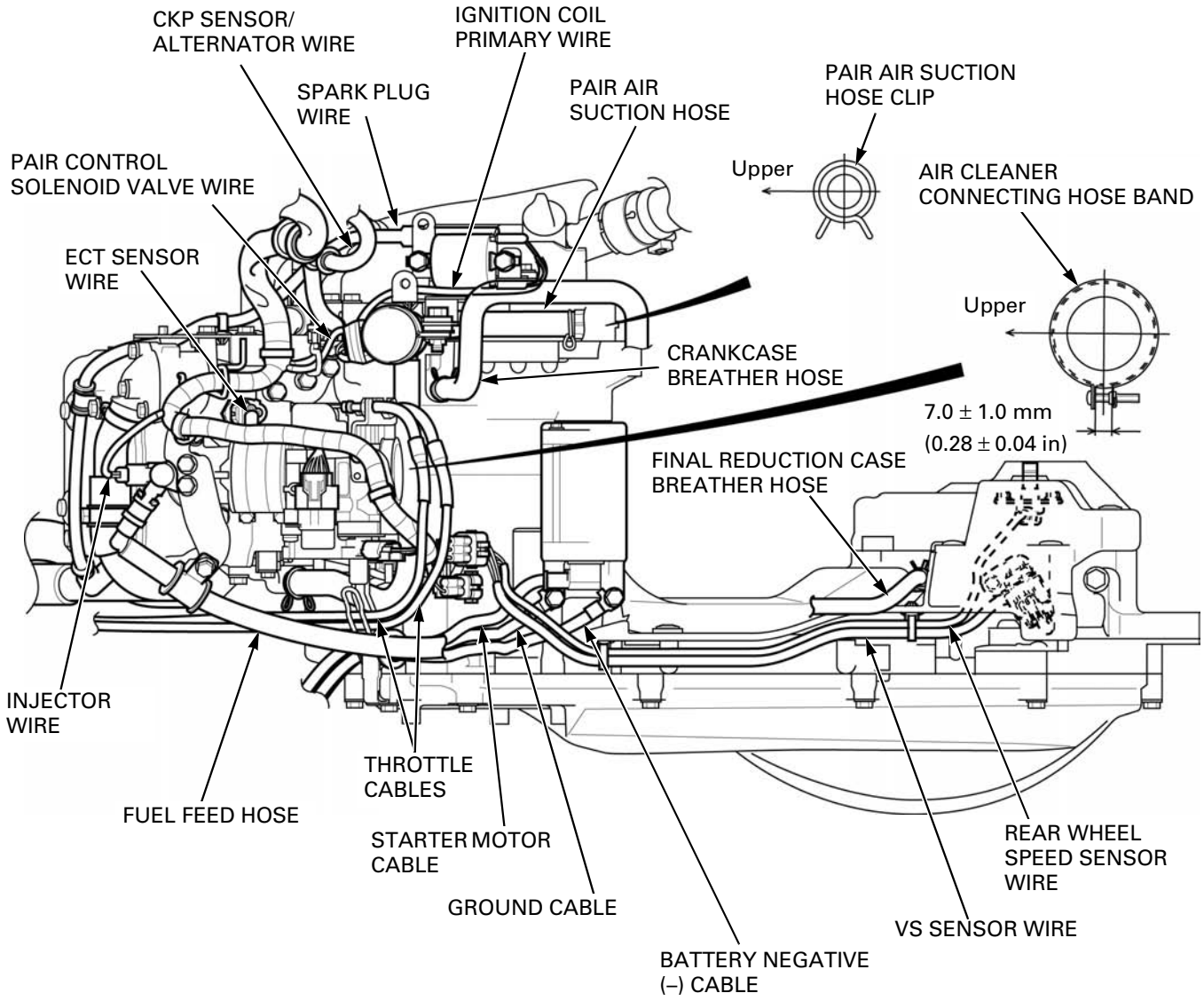
CKP SENSOR/
ALTERNATOR WIRE
IGNITION COIL
PRIMARY WIRE
SPARK PLUG
WIRE
PAIR AIR
SUCTION HOSE
PAIR AIR SUCTION
HOSE CLIP
Upper
AIR CLEANER
CONNECTING HOSE BAND
PAIR CONTROL
SOLENOID VALVE WIRE
ECT SENSOR
WIRE
Upper
CRANKCASE
BREATHER HOSE
7.0 ± 1.0 mm
(0.28 ± 0.04 in)
FINAL REDUCTION CASE
BREATHER HOSE
INJECTOR
WIRE
THROTTLE
CABLES
FUEL FEED HOSE
STARTER MOTOR
CABLE
GROUND CABLE
REAR WHEEL
SPEED SENSOR
WIRE
VS SENSOR WIRE
BATTERY NEGATIVE
(–) CABLE

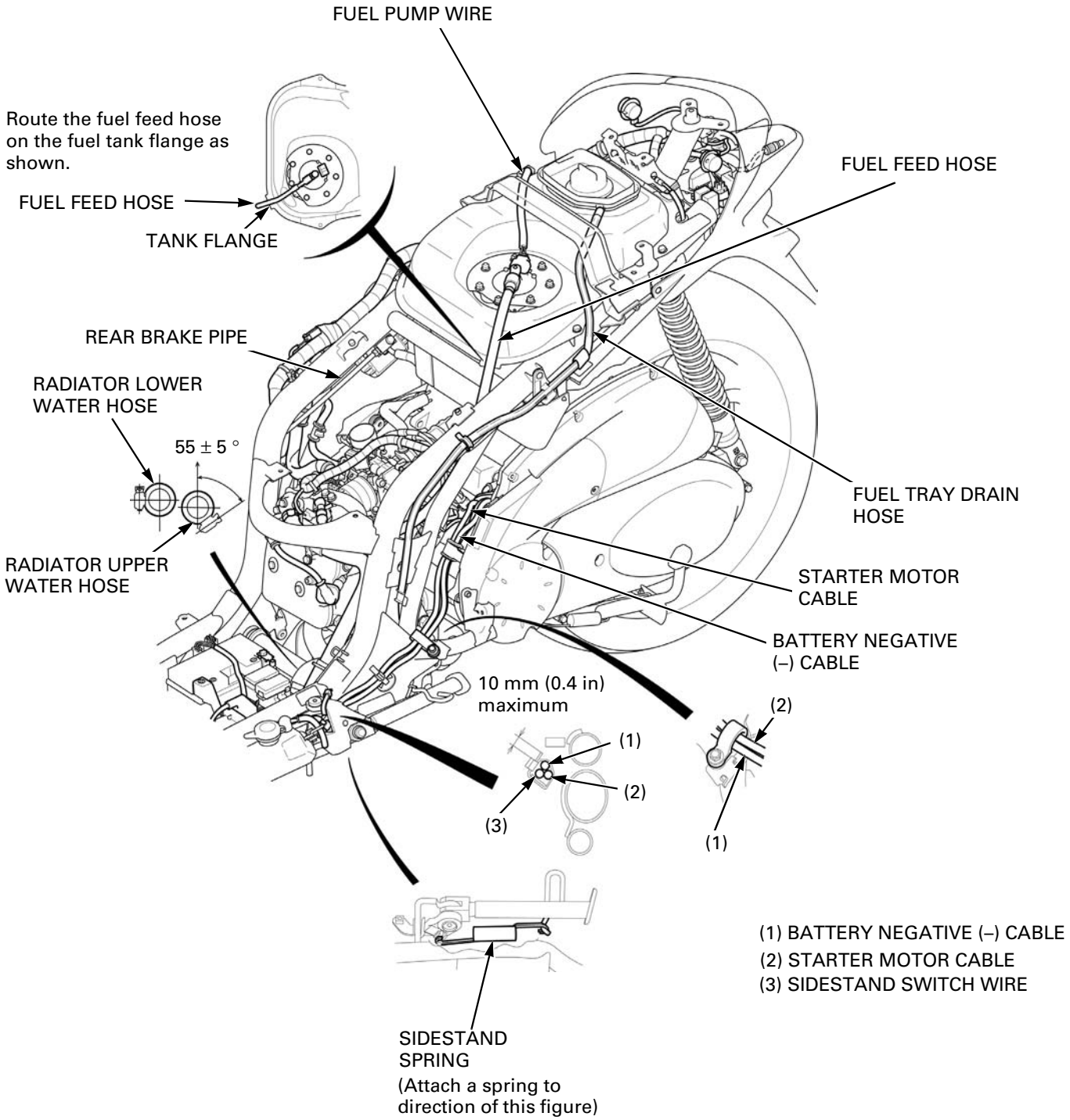
FUEL PUMP WIRE
Route the fuel feed hose on the fuel tank flange as shown.
FUEL FEED HOSE
TANK FLANGE
FUEL FEED HOSE
REAR BRAKE PIPE
RADIATOR LOWER WATER HOSE
55 ± 5 °
RADIATOR UPPER WATER HOSE
FUEL TRAY DRAIN HOSE
STARTER MOTOR CABLE
BATTERY NEGATIVE (–) CABLE
10 mm (0.4 in) maximum
(1)
(2)
(3)
(2)
(1)
(1) BATTERY NEGATIVE (–) CABLE
(2) STARTER MOTOR CABLE
(3) SIDESTAND SWITCH WIRE
SIDESTAND SPRING
(Attach a spring to direction of this figure)

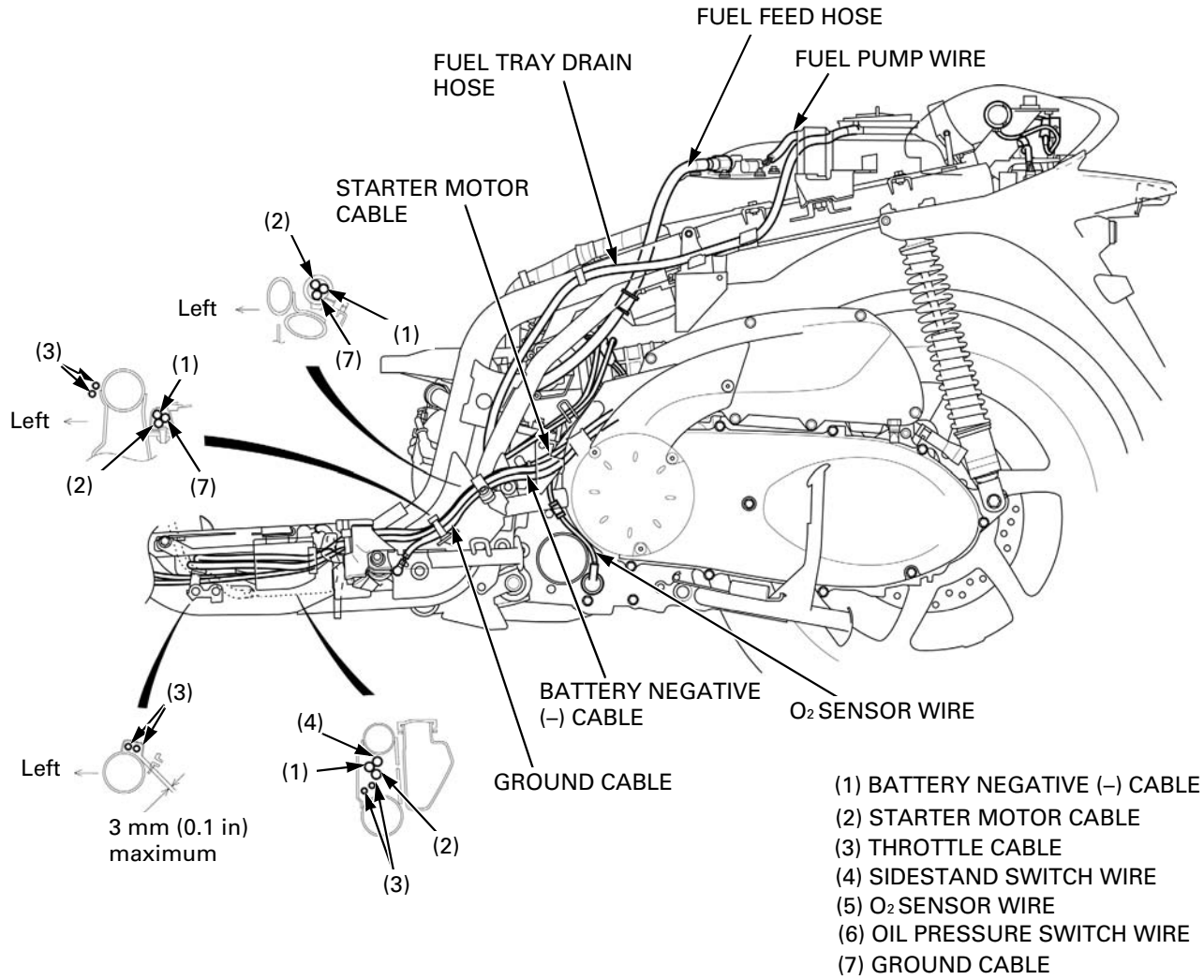
FUEL FEED HOSE
FUEL TRAY DRAIN HOSE
FUEL PUMP WIRE
STARTER MOTOR CABLE
(2)
Left
(1)
(7)
(3)
(1)
Left
(2)
(7)
(3)
Left
3 mm (0.1 in) maximum
(4)
(1)
(2)
(3)
BATTERY NEGATIVE (–) CABLE
O2 SENSOR WIRE
GROUND CABLE
(1) BATTERY NEGATIVE (–) CABLE
(2) STARTER MOTOR CABLE
(3) THROTTLE CABLE
(4) SIDESTAND SWITCH WIRE
(5) O2 SENSOR WIRE
(6) OIL PRESSURE SWITCH WIRE
(7) GROUND CABLE

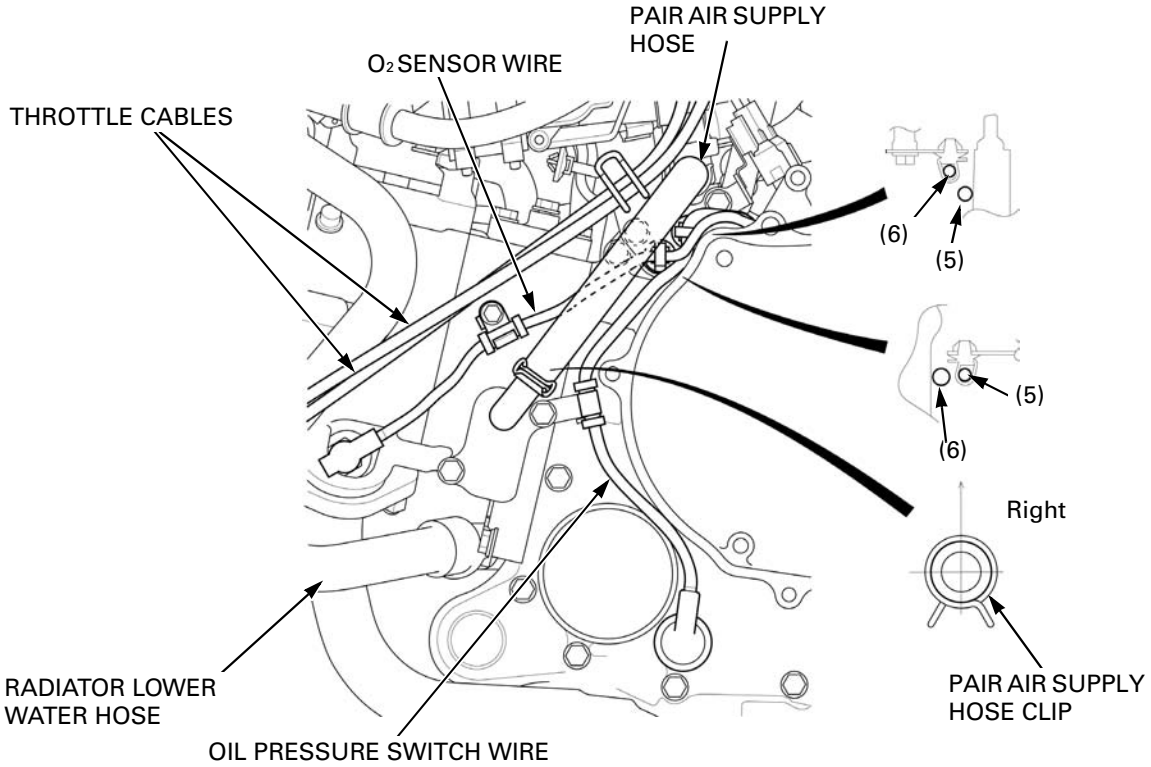
PAIR AIR SUPPLY HOSE
O2 SENSOR WIRE
THROTTLE CABLES
(6)
(5)
(5)
(6)
Right
RADIATOR LOWER WATER HOSE
OIL PRESSURE SWITCH WIRE
PAIR AIR SUPPLY HOSE CLIP

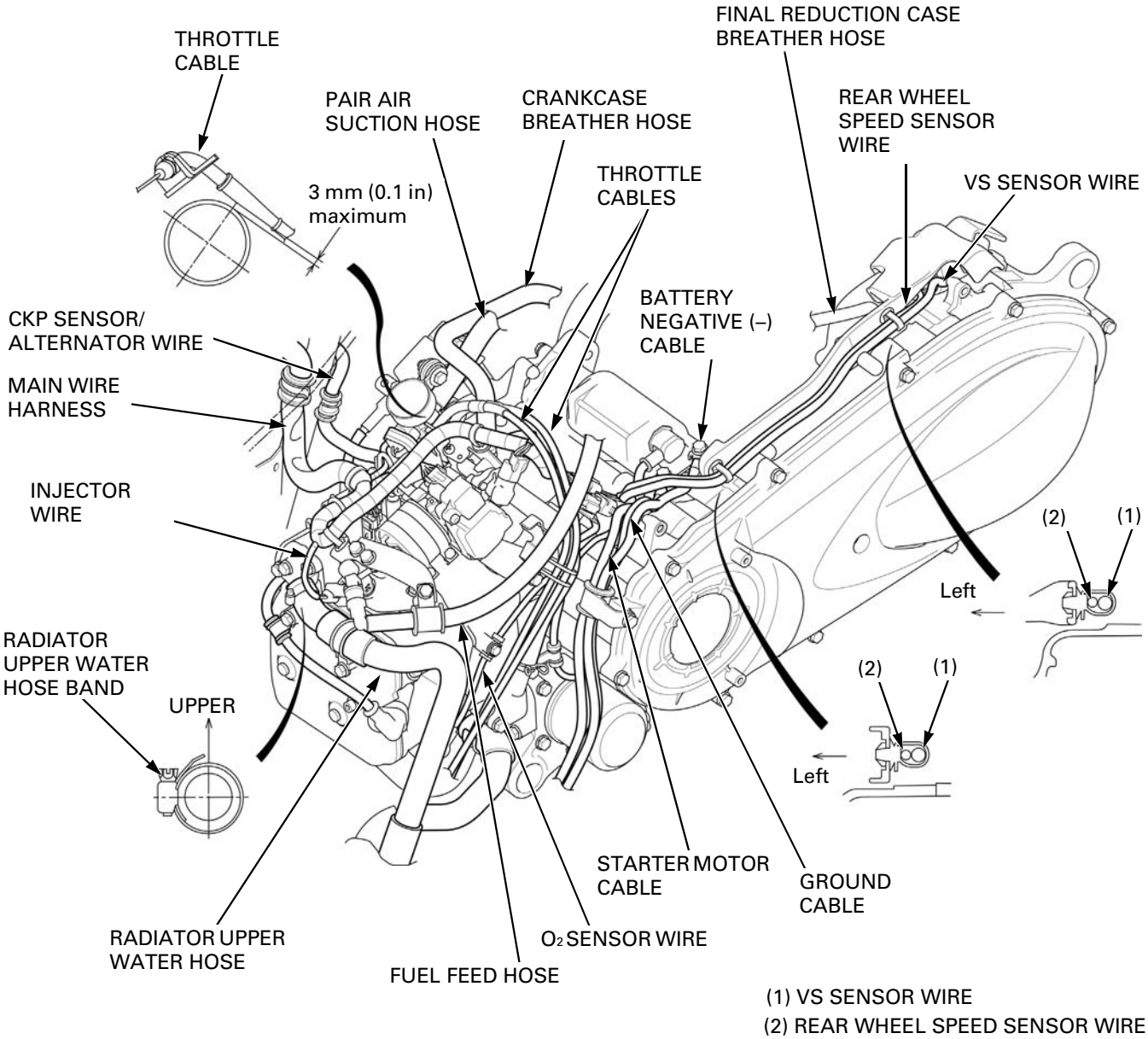

(1) VS SENSOR WIRE
(2) REAR WHEEL SPEED SENSOR WIRE

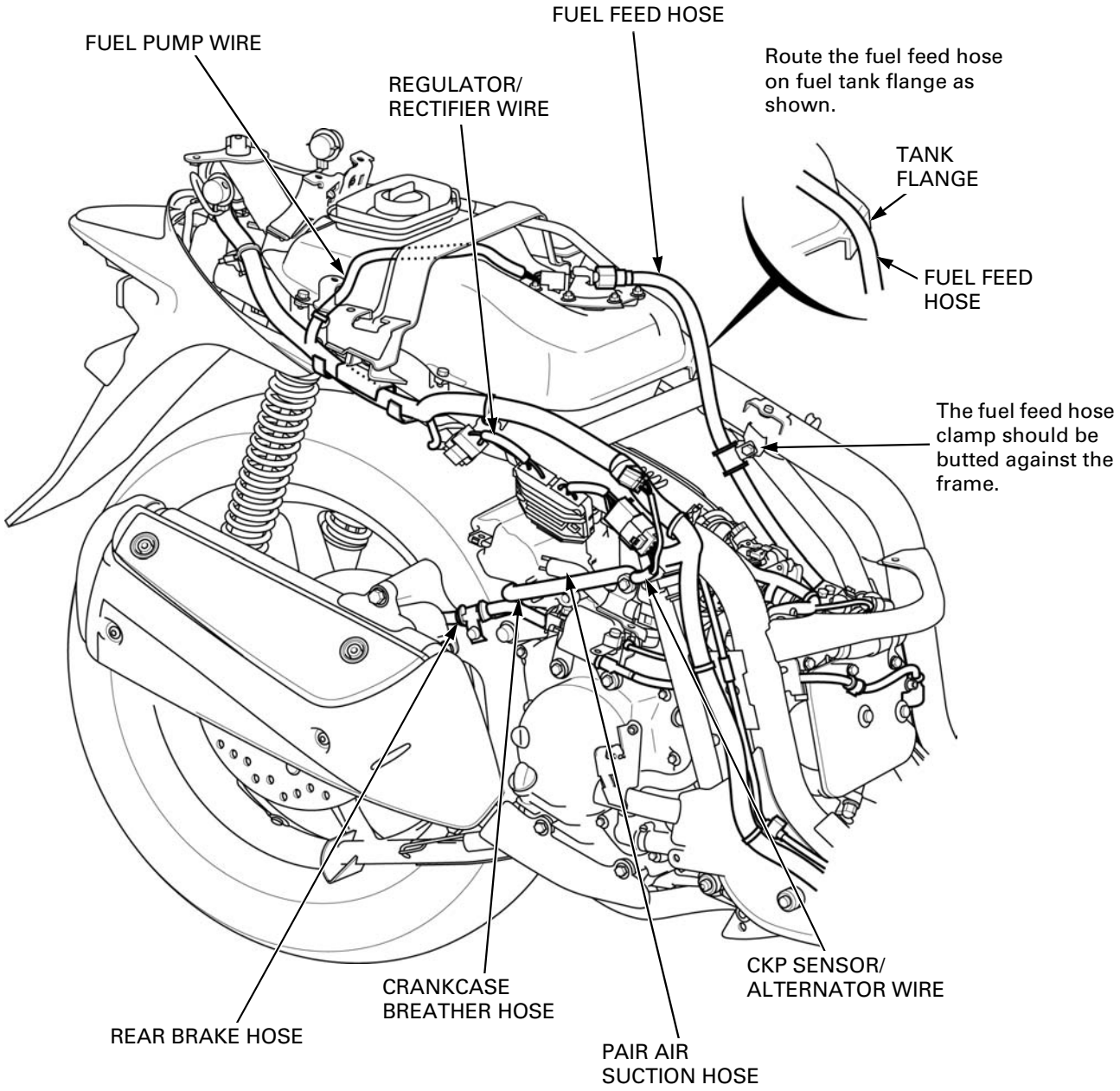
FUEL FEED HOSE
FUEL PUMP WIRE
Route the fuel feed hose on fuel tank flange as shown.
REGULATOR/ RECTIFIER WIRE
TANK FLANGE
FUEL FEED HOSE
The fuel feed hose clamp should be butted against the frame.
CKP SENSOR/ ALTERNATOR WIRE
CRANKCASE BREATHER HOSE
REAR BRAKE HOSE
PAIR AIR SUCTION HOSE

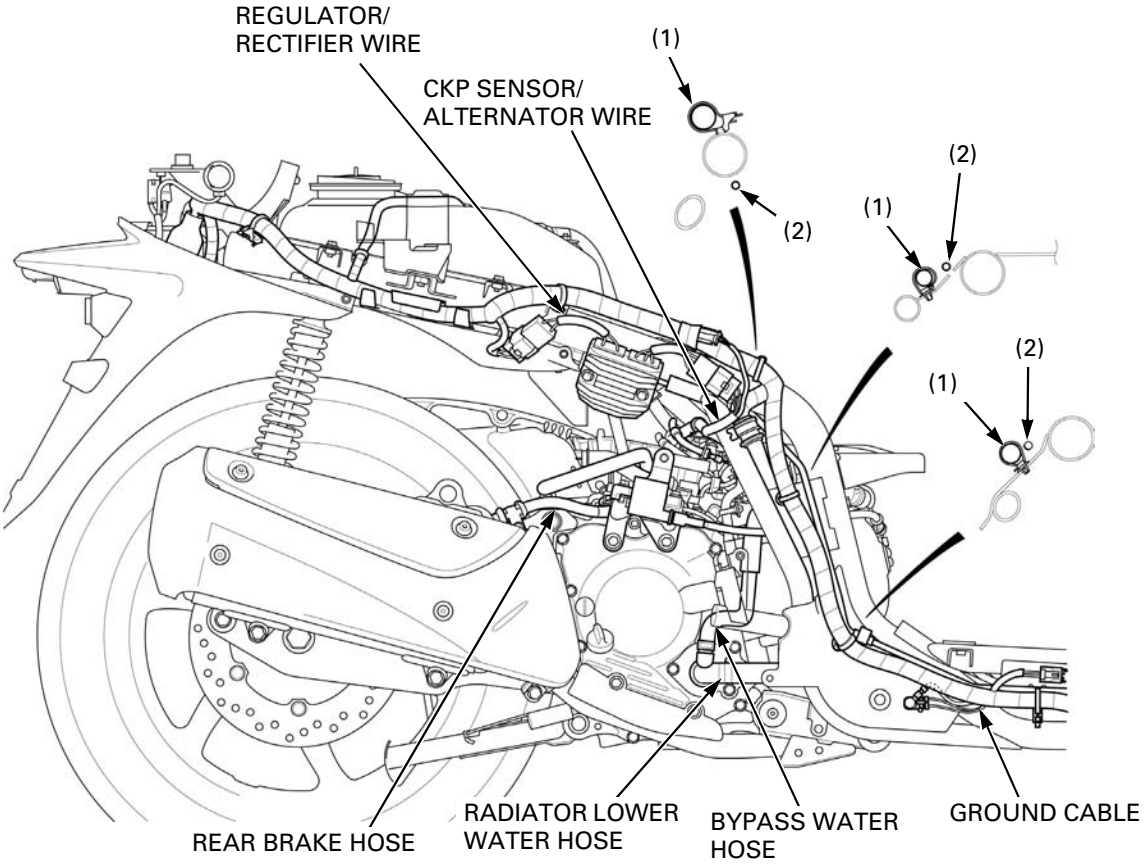

(1) MAIN WIRE HARNESS
(2) REAR BRAKE PIPE

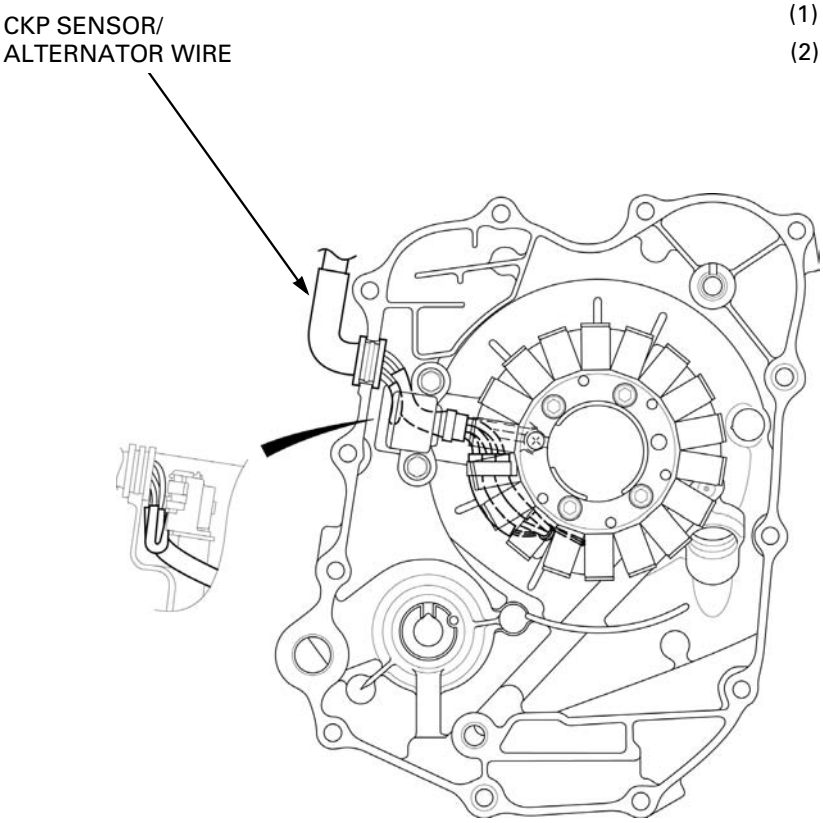

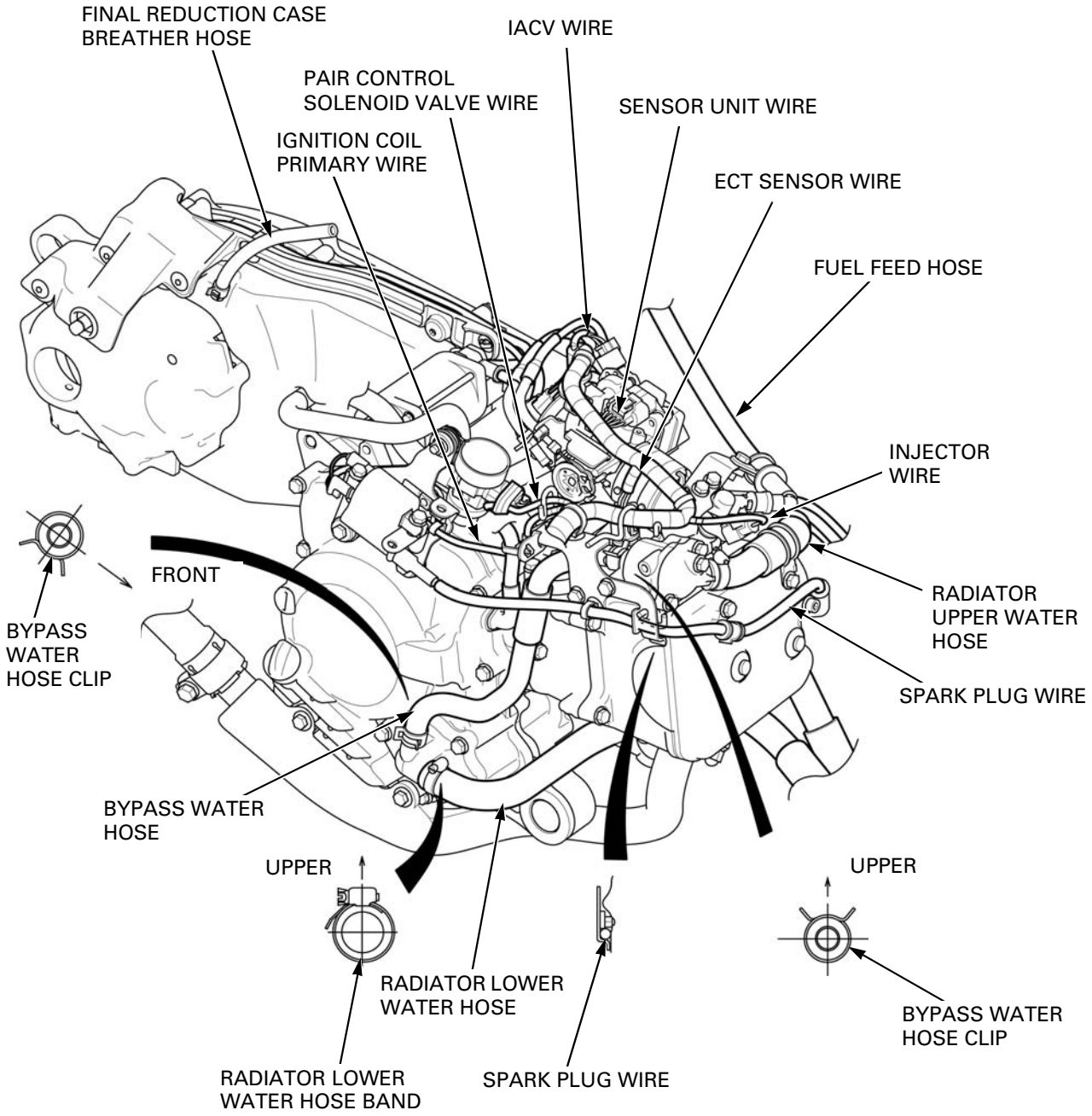
FINAL REDUCTION CASE BREATHER HOSE
IACV WIRE
PAIR CONTROL SOLENOID VALVE WIRE
SENSOR UNIT WIRE
IGNITION COIL PRIMARY WIRE
ECT SENSOR WIRE
FUEL FEED HOSE
INJECTOR WIRE
FRONT
BYPASS WATER HOSE CLIP
RADIATOR UPPER WATER HOSE
SPARK PLUG WIRE
BYPASS WATER HOSE
UPPER
UPPER
RADIATOR LOWER WATER HOSE
BYPASS WATER HOSE CLIP
RADIATOR LOWER WATER HOSE BAND
SPARK PLUG WIRE

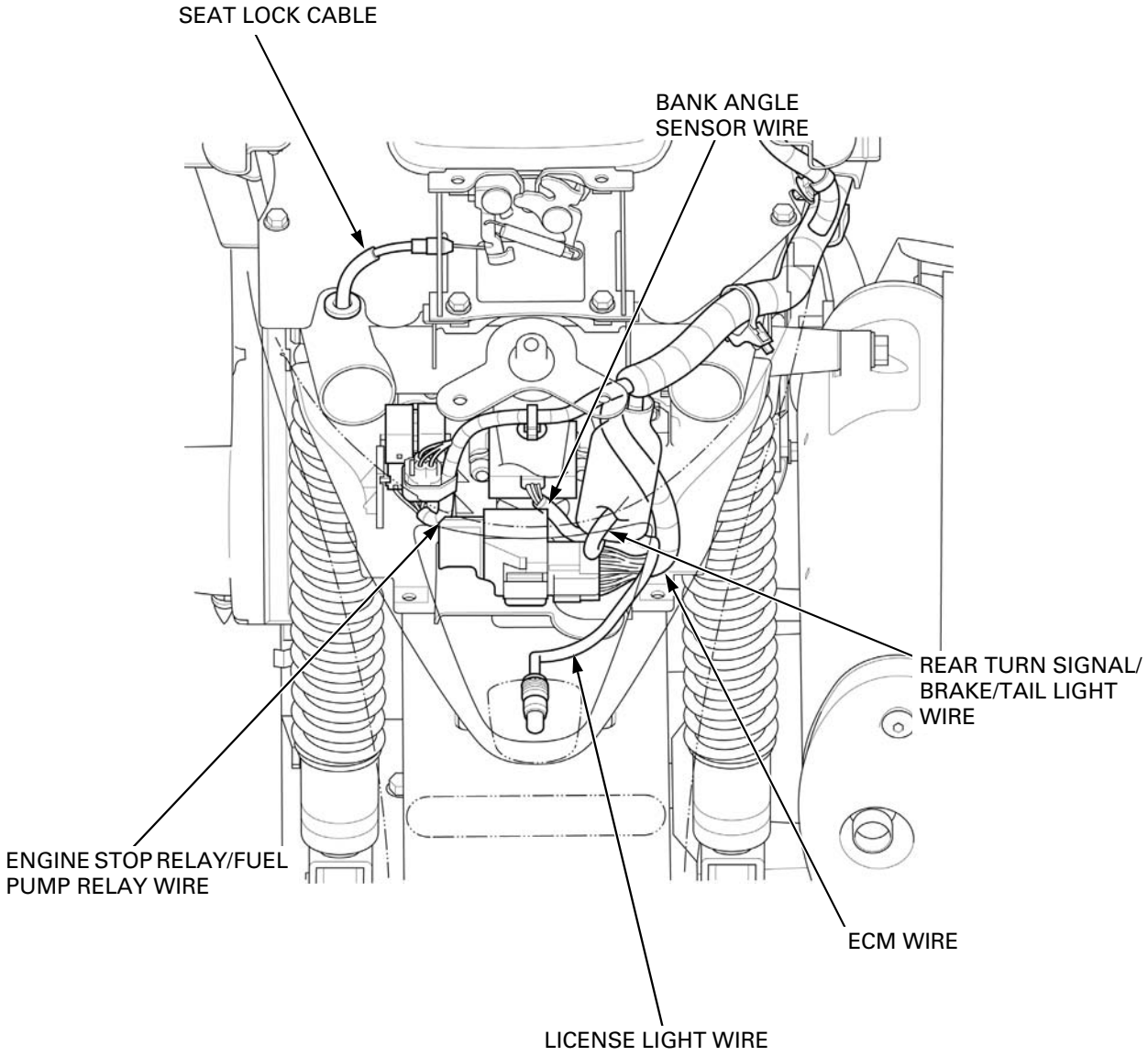
SEAT LOCK CABLE
BANK ANGLE SENSOR WIRE
REAR TURN SIGNAL/ BRAKE/TAIL LIGHT WIRE
ENGINE STOP RELAY/FUEL PUMP RELAY WIRE
ECM WIRE
LICENSE LIGHT WIRE

EMISSION CONTROL SYSTEMS

SOURCE OF EMISSIONS

The combustion process produces carbon monoxide, oxides of nitrogen and hydrocarbons. Control of hydrocarbons and oxides of nitrogen is very important because, under certain conditions, they react to form photochemical smog when subjected to sunlight. Carbon monoxide does not react in the same way, but it is toxic.

Honda Motor Co., Ltd. utilizes various systems to reduce carbon monoxide, oxides of nitrogen and hydrocarbons.

CRANKCASE EMISSION CONTROL SYSTEM

The engine is equipped with a closed crankcase system to prevent discharging crankcase emissions into the atmosphere. Blow-by gas is returned to the combustion chamber through the air cleaner housing and throttle body. Condensed crankcase vapors are accumulated in a crankcase breather drain plug which must be emptied periodically (page 4-7).

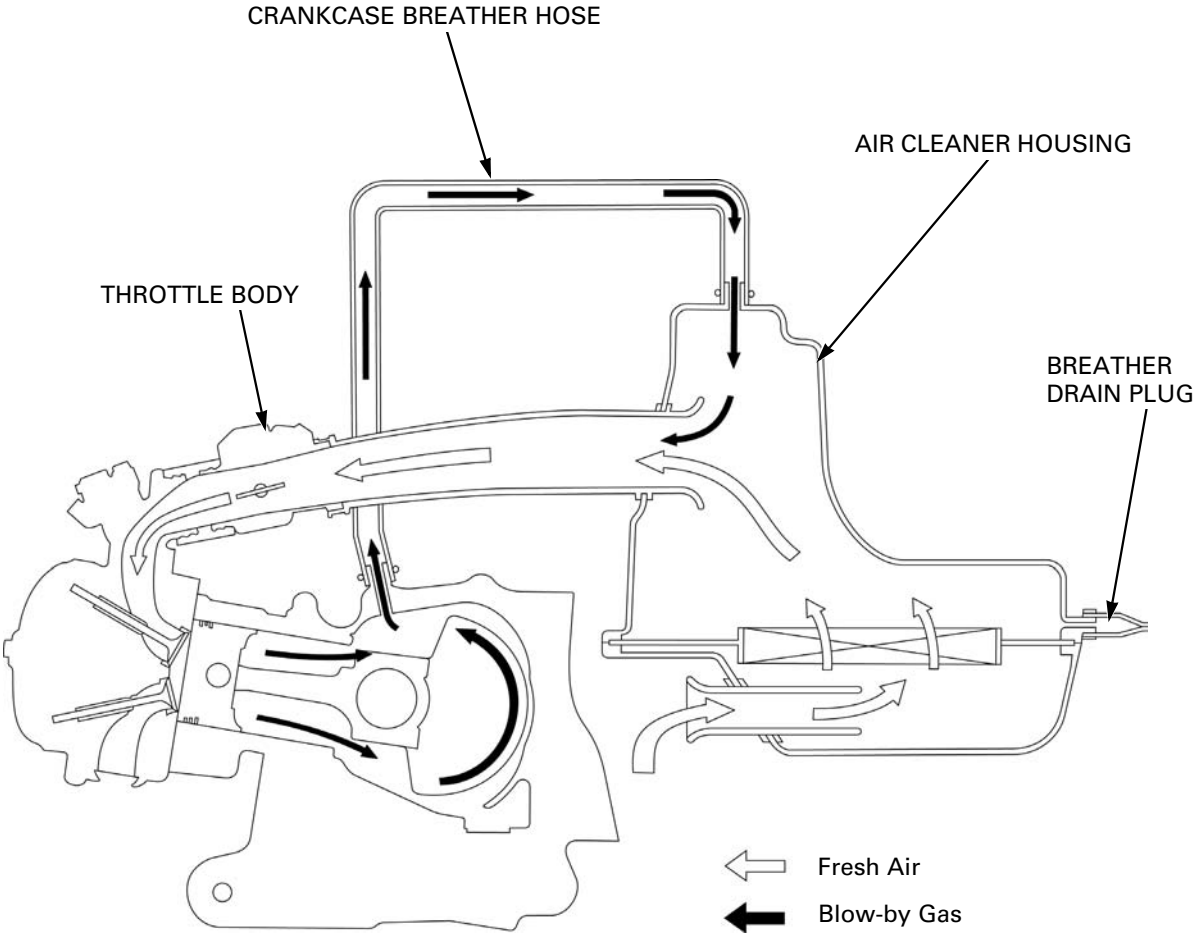

EXHAUST EMISSION CONTROL SYSTEM

The exhaust emission control system is composed of a secondary air supply system and PGM-FI system, and no adjustments should be made. The exhaust emission control system is separate from the crankcase emission control system.

SECONDARY AIR SUPPLY SYSTEM

The secondary air supply system which introduces filtered air into the exhaust gases in the exhaust port. Fresh air is drawn into the exhaust port by the function of the PAIR control solenoid valve.
This charge of fresh air promotes burning of the unburned exhaust gases and changes a considerable amount of hydrocarbons and carbon monoxide into relatively harmless carbon dioxide and water vapor.

The PAIR check valve prevents reverse air flow through the system. The PAIR control solenoid valve is controlled by the ECM, and the fresh air passage is opened and closed according to the running condition.

No adjustments to the secondary air supply system should be made, although periodic inspection of the components is recommended.

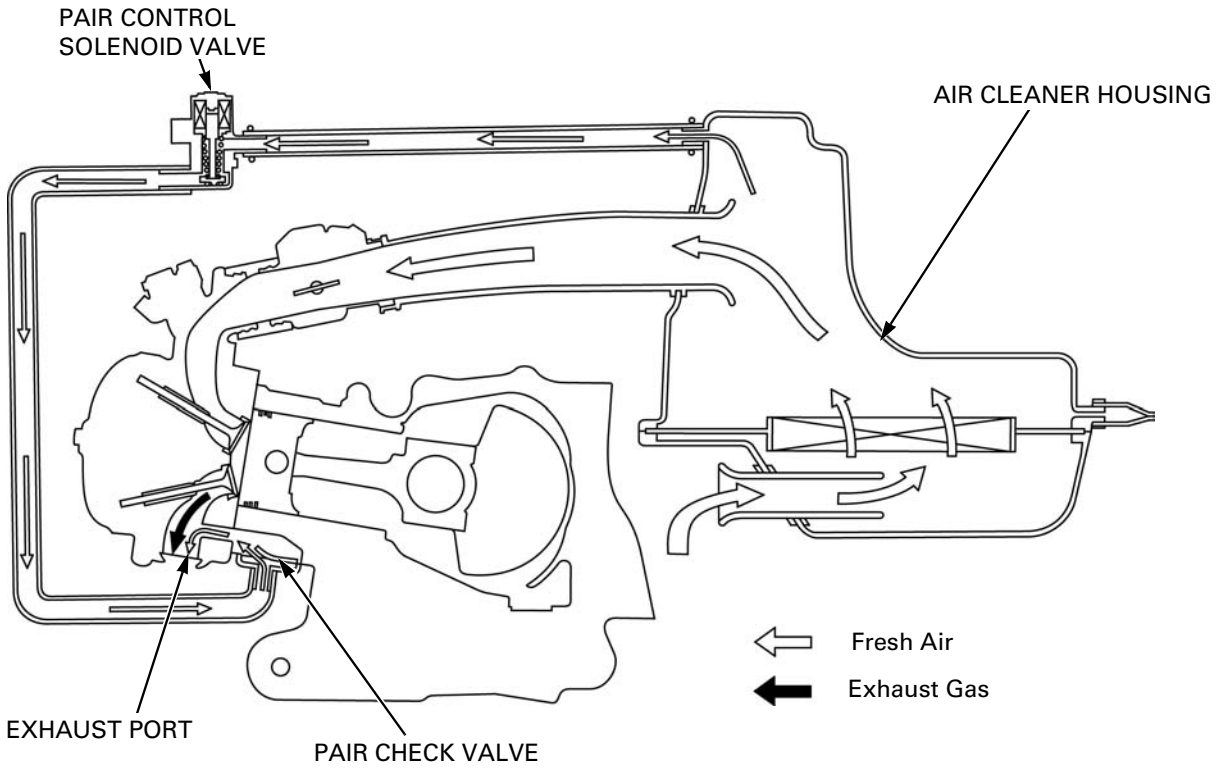

THREE-WAY CATALYTIC CONVERTER

This scooter is also equipped with the three-way catalytic converter. The three-way catalytic converter is in the exhaust system. Through chemical reactions, they convert HC, CO and NOx in the engine's exhaust to carbon dioxide (CO_2), dinitrogen (N_2) and water vapor.

NOISE EMISSION CONTROL SYSTEM

TAMPERING WITH THE NOISE EMISSION CONTROL SYSTEM IS PROHIBITED: Local law prohibits the following acts or the causing thereof: (1) The removal or rendering inoperative by any person, other than for the purposes of maintenance, repair or replacement, of any device or element of design incorporated into any vehicle for the purpose of noise control prior to its sale or delivery to the ultimate customer or while it is in use; or (2) the use of any vehicle after such device or element of design has been removed or rendered inoperative by any person.

AMONG THOSE ACTS PRESUMED TO CONSTITUTE TAMPERING ARE THE ACTS LISTED BELOW:
1. Removal of, or puncturing of the muffler, baffles, header pipes or any other component which conducts exhaust gases.
2. Removal of, or puncturing of any part of the intake system.
3. Lack of proper maintenance.
4. Replacing any moving parts of the vehicle, or parts of the exhaust or intake system, with parts other than those specified by the manufacturer.

MEMO

2. TECHNICAL FEATURES

2

HEATER-LESS O_2 SENSOR ····· 2-2
UNIT-SWING ENGINE LAYOUT ····· 2-3

HEATER-LESS O_2 SENSOR

SUMMARY

This model utilizes a heater-less O_2 sensor.

As O_2 sensor does not function properly until it is warmed up, conventional O_2 sensor is equipped with a heater.
Heater-less O_2 sensor is located near the exhaust port in order to make use of the heat from the exhaust gas, eliminating the need for a heater.
When the engine is warmed up to normal operating temperature, heater-less O_2 sensor starts its normal operation.

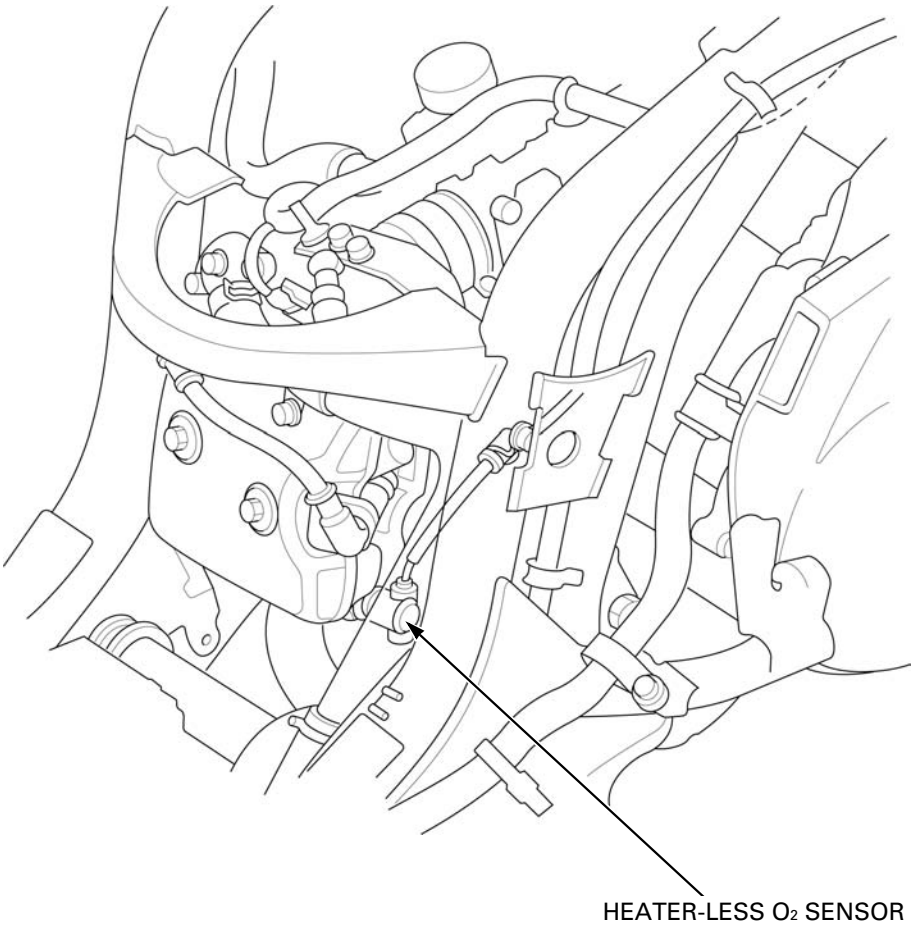

UNIT-SWING ENGINE LAYOUT

SUMMARY

This model utilizes the engine unit link located below the engine in order to provide enhanced riding comfort and stability.

The engine unit link consists of engine hanger A, engine hanger B and swing rod.
Needle bearings are installed on the unit link pivot in order to obtain smooth swing without sacrificing the rigidity of the unit link.
Furthermore, the swing rod controls/restricts to-and-fro and vertical travel of the engine pivot individually, providing both riding comfort and stability without compromise.

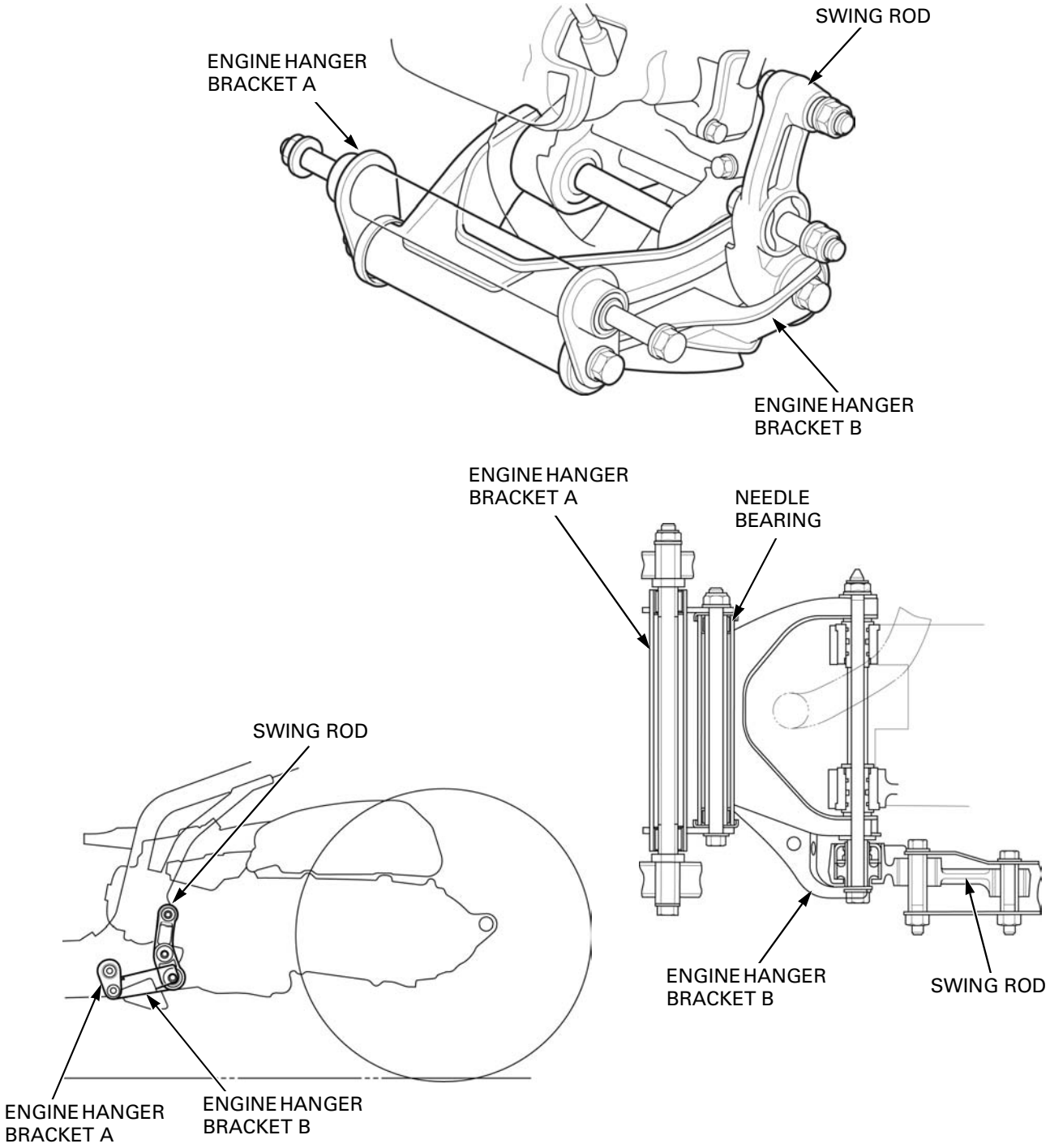

MEMO

3. FRAME/BODY PANELS/EXHAUST SYSTEM

BODY PANEL LOCATIONS 3-2

SERVICE INFORMATION 3-3

TROUBLESHOOTING 3-3

SNAP FIT CLIP 3-4

MAINTENANCE LID 3-4

SEAT 3-4

LUGGAGE BOX 3-5

GRAB RAIL 3-5

BODY COVER 3-6

REAR FENDER 3-7

FRONT FENDER 3-8

FLOOR SIDE COVER 3-8

UNDER COVER 3-9

FRONT UPPER COVER 3-9

FRONT INNER COVER 3-10

FRONT LOWER COVER 3-12

FLOOR PANEL 3-13

FRONT HANDLEBAR COVER 3-14

REAR HANDLEBAR COVER 3-14

EXHAUST PIPE/MUFFLER 3-15

SIDESTAND 3-16

CENTERSTAND 3-16

BODY PANEL LOCATIONS

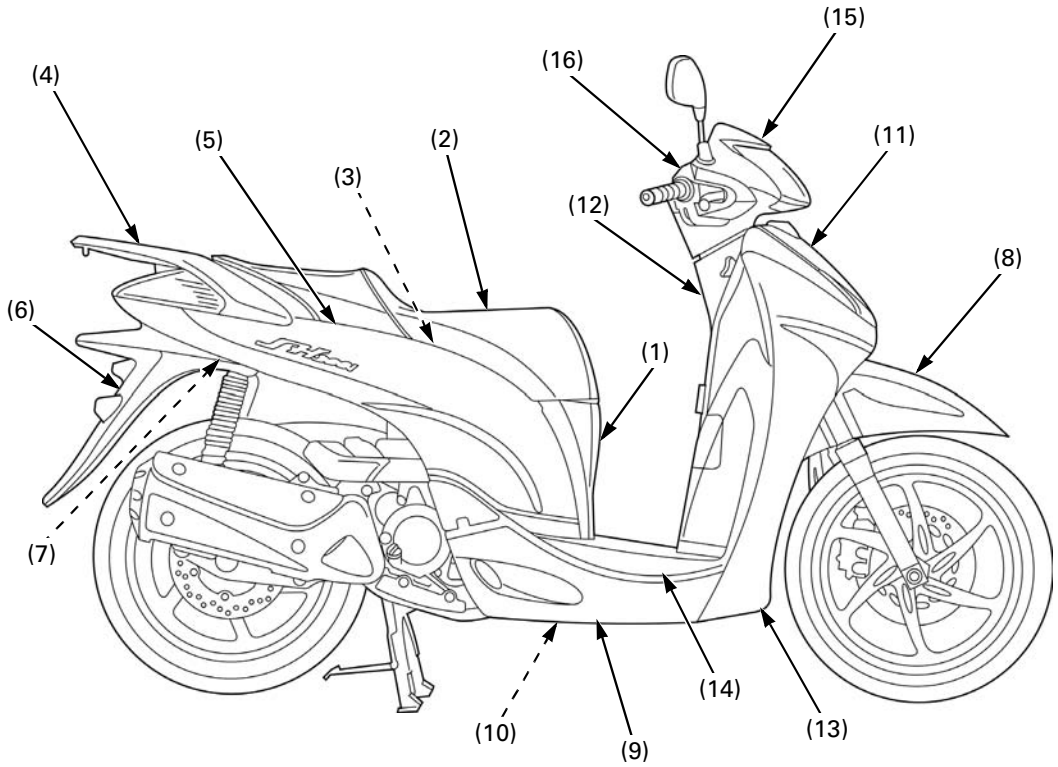

(1) Maintenance Lid (page 3-4)
(2) Seat (page 3-4)
(3) Luggage Box (page 3-5)
(4) Grab Rail (page 3-5)
(5) Body Cover (page 3-6)
(6) Rear Fender A (page 3-7)
(7) Rear Fender B (page 3-7)
(8) Front Fender (page 3-8)
(9) Floor Side Cover (page 3-8)
(10) Under cover (page 3-9)
(11) Front Upper Cover (page 3-9)
(12) Front Inner Cover (page 3-10)
(13) Front Lower Cover (page 3-12)
(14) Floor Panel (page 3-13)
(15) Front Handlebar Cover (page 3-14)
(16) Rear Handlebar Cover (page 3-14)

BODY PANEL REMOVAL CHART

- This chart shows removal order of frame covers by means of arrow.

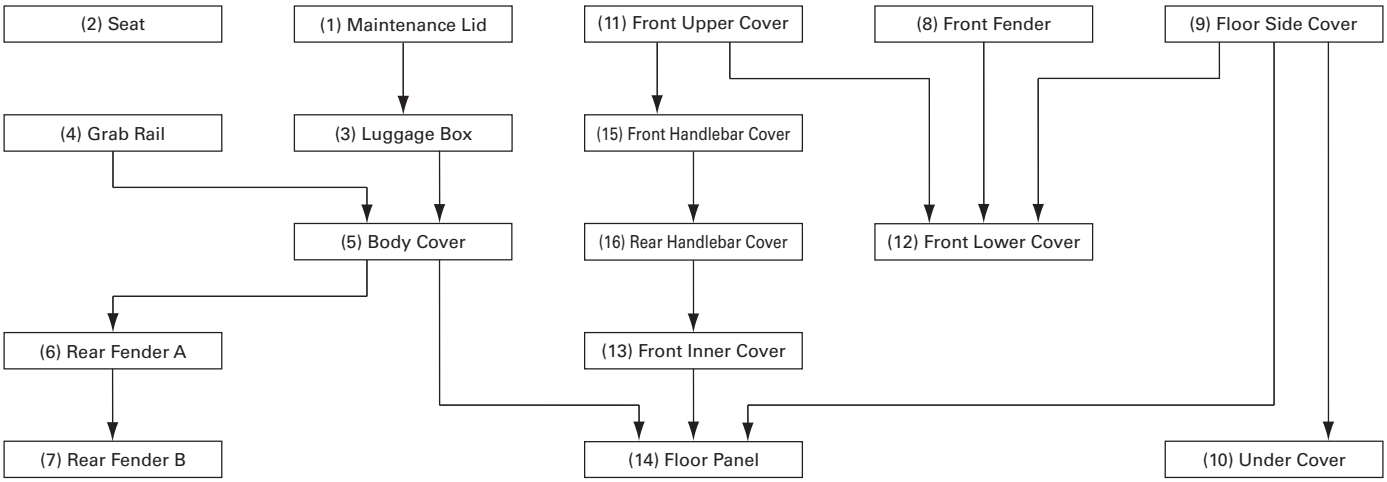

SERVICE INFORMATION

GENERAL

- This section covers removal and installation of the body panels and exhaust system.
- When installing the covers, make sure the mating areas are aligned properly before tightening the fasteners.
- Always replace the exhaust pipe gasket after removing the exhaust system.
- When installing the exhaust system, loosely install all of the fasteners. Always tighten the exhaust joint first, then tighten the mounting fasteners. If you tighten the mounting fasteners first, the exhaust pipe may not seat properly.
- Always inspect the exhaust system for leaks after installation.

TORQUE VALUES

Luggage box mounting bolt	10 N·m (1.0 kgf·m, 7 lbf·ft)	
Luggage box mounting washer bolt	10 N·m (1.0 kgf·m, 7 lbf·ft)	
Front fender mounting bolt	12 N·m (1.2 kgf·m, 9 lbf·ft)	
Rear view mirror lock nut	34 N·m (3.5 kgf·m, 25 lbf·ft)	
Exhaust pipe stud bolt	9 N·m (0.9 kgf·m, 6.6 lbf·ft)	See page 3-15
Exhaust pipe joint nut	29 N·m (3.0 kgf·m, 21 lbf·ft)	
Exhaust pipe band bolt	22 N·m (2.2 kgf·m, 16 lbf·ft)	
Muffler mounting bolt	49 N·m (5.0 kgf·m, 36 lbf·ft)	
Sidestand pivot bolt	10 N·m (1.0 kgf·m, 7 lbf·ft)	
Sidestand pivot nut	30 N·m (3.1 kgf·m, 22 lbf·ft)	U-nut.

TROUBLESHOOTING

Excessive exhaust noise
- Broken exhaust system
- Exhaust gas leak

Poor performance
- Deformed exhaust system
- Exhaust gas leak
- Clogged muffler

SNAP FIT CLIP

Make sure that the insertion of the clip is not tilted when removing or installing the snap fit clip. If tilted upon removal or installation, damage to the insertion or/and the hole may occur.

Separate the parts by pulling the snap fit clip straight out of the hole, being careful not to tilt the insertion of the clip.

Check the snap fit clip for damage and replace if necessary.

Install the parts by inserting the snap fit clip straight into the hole, being careful not to tilt the insertion of the clip.

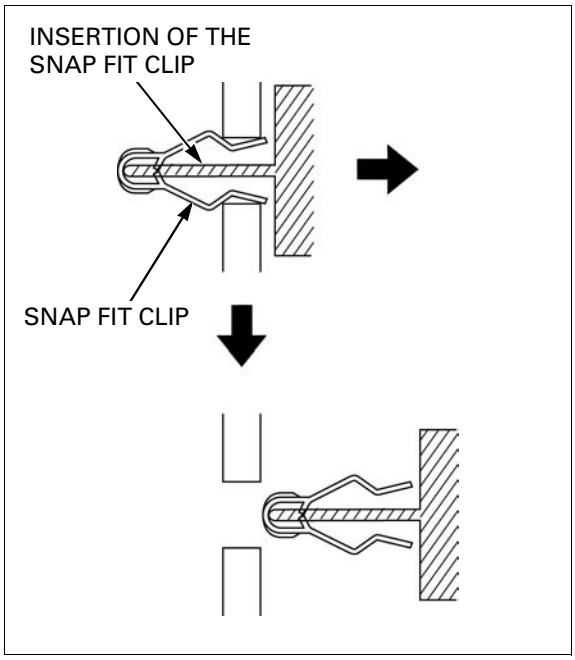

MAINTENANCE LID

Unlock the seat lock with the ignition key and open the seat.

Remove the two special screws.

Release the side tabs from the body cover and the front tabs from the floor panel to remove the maintenance lid.

Installation is in the reverse order of removal.

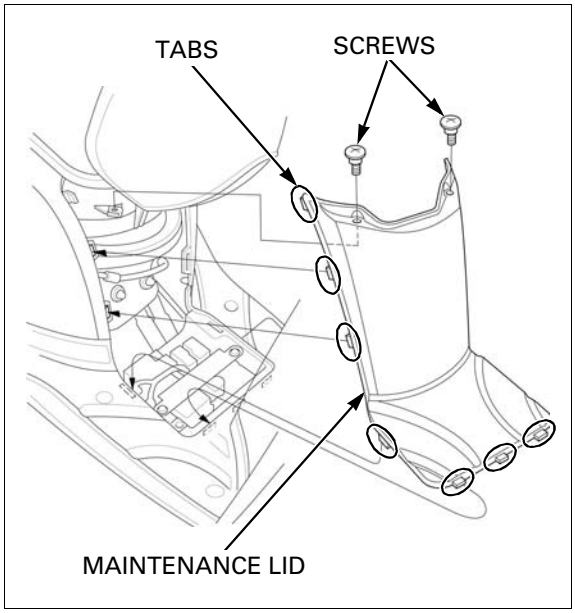

SEAT

Unlock the seat lock with the ignition key and open the seat.

Remove the two nuts while supporting the seat to remove it.

Installation is in the reverse order of removal.

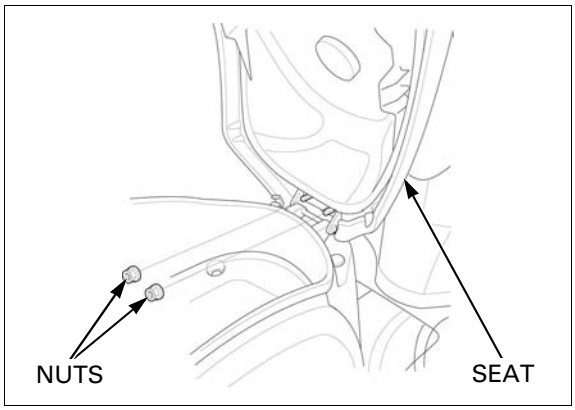

LUGGAGE BOX

Remove the maintenance lid (page 3-4).

Remove the following:

– four mounting bolts
– two washer bolts
– luggage box

Installation is in the reverse order of removal.

- Make sure that the fuel hose is routed on the fuel tank flange as shown.

TORQUE:
Luggage box mounting bolt:
10 N·m (1.0 kgf·m, 7 lbf·ft)
Luggage box mounting washer bolt:
10 N·m (1.0 kgf·m, 7 lbf·ft)

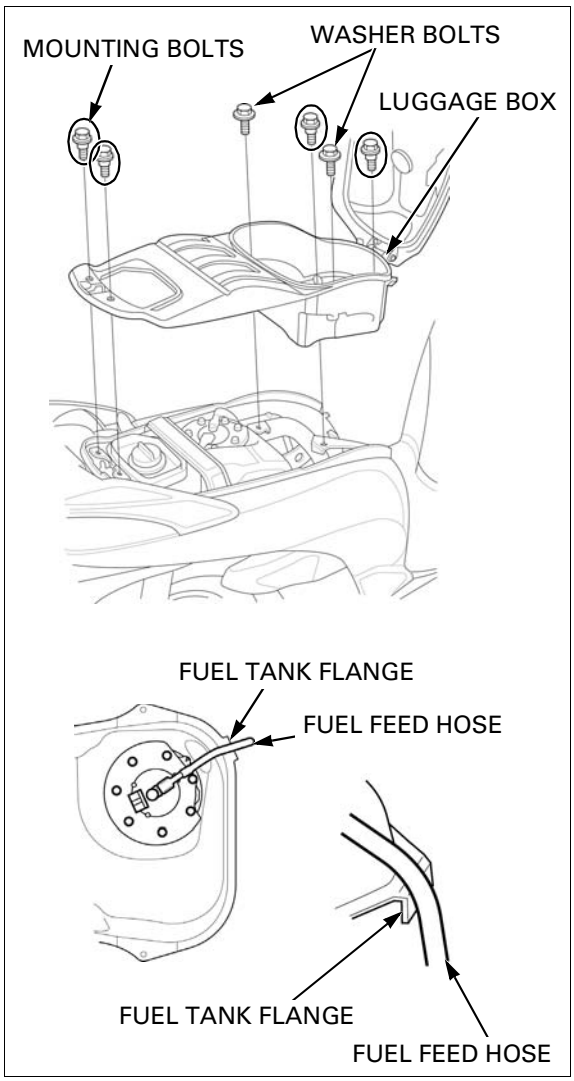

GRAB RAIL

Unlock the seat lock with the ignition key and open the seat.

Remove the three bolts, washers and grab rail.

Installation is in the reverse order of removal.

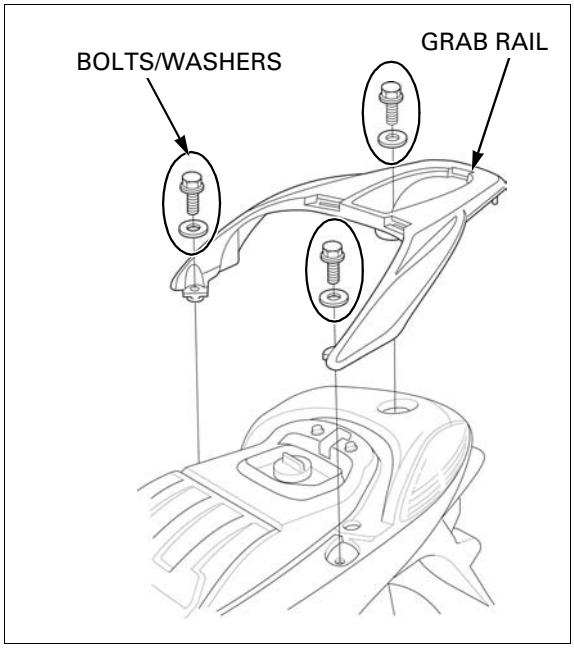

BODY COVER

Remove the following:

- maintenance lid (page 3-4)
- luggage box (page 3-5)
- grab rail (page 3-5)

Remove the two special screws.

Be careful not to damage the tab on the center body cover.

Remove the center body cover by releasing the four snap fit clips (page 3-4) of the center body cover from the body cover slots.

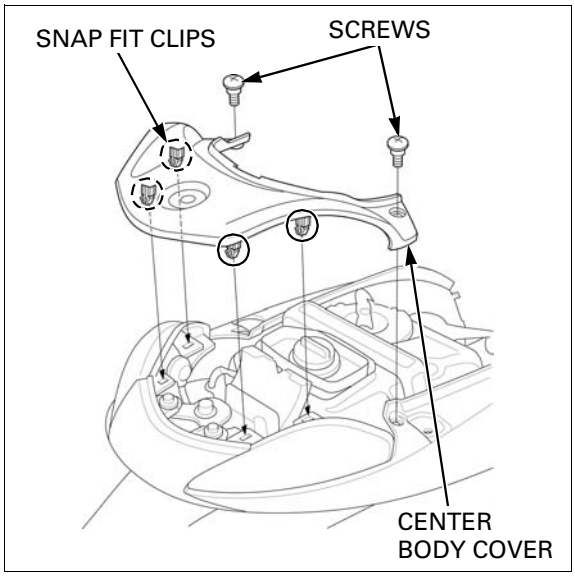

Remove the following:

- two tapping screws
- two special screws
- two bolts and collars

Raise the front portion of the body cover slightly and release its tabs from the floor panel.
Remove the body cover and disconnect the rear combination light 6P connector.

Route the rear combination light wire properly (page 1-19).

Installation is in the reverse order of removal.

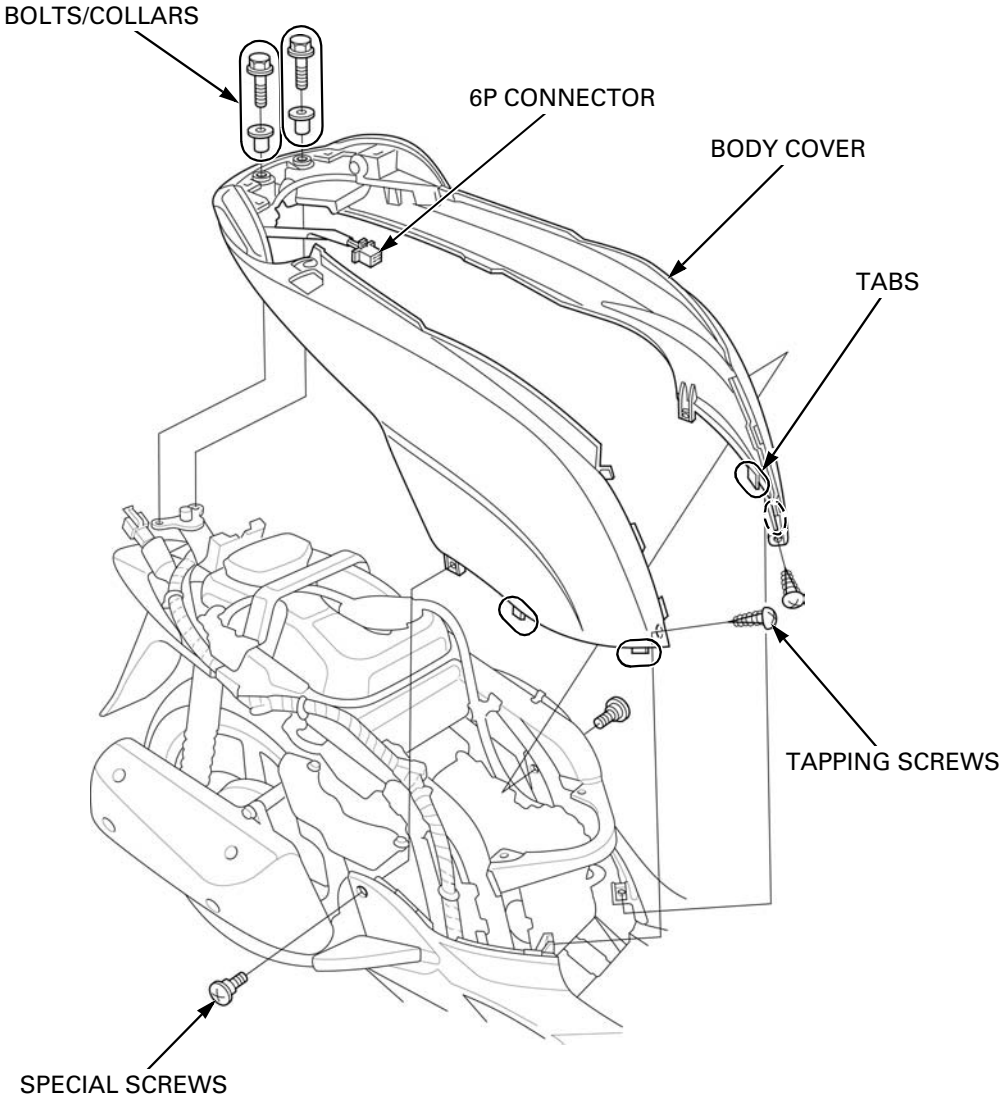

REAR FENDER

REAR FENDER A

Remove the body cover (page 3-6).

Remove the following:

- license light 3P (black) connector
- two special bolts
- three washer bolts
- rear fender A

Route the license light wire properly (page 1-19).

Installation is in the reverse order of removal.

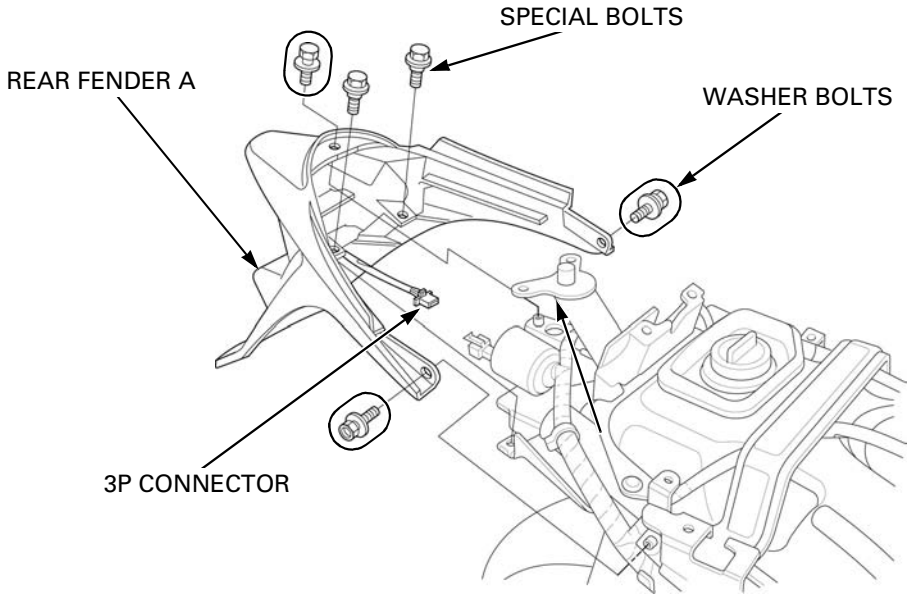

REAR FENDER B

Remove the rear fender A (page 3-7).

Support the swingarm securely.
Remove either rear shock absorber (page 16-12).

Remove the ECM (page 6-65).
Remove the fuel pump/engine stop relays (page 6-69) from the rear fender B.
Release the main wire harness and fuel tank over flow hose from the guides of rear fender B.

Remove the four bolts and the rear fender B.

Route the wires properly (page 1-19).

Installation is in the reverse order of removal.

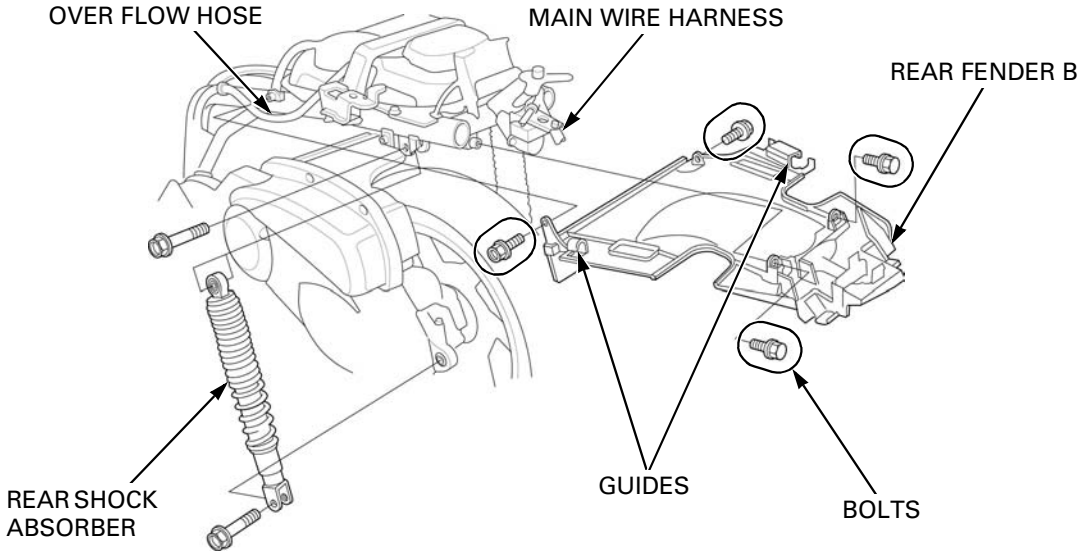

FRONT FENDER

Remove the following:

– three special bolts
– front fender

Installation is in the reverse order of removal.

TORQUE: Front fender mounting bolt
12 N·m (1.2 kgf·m, 9 lbf·ft)

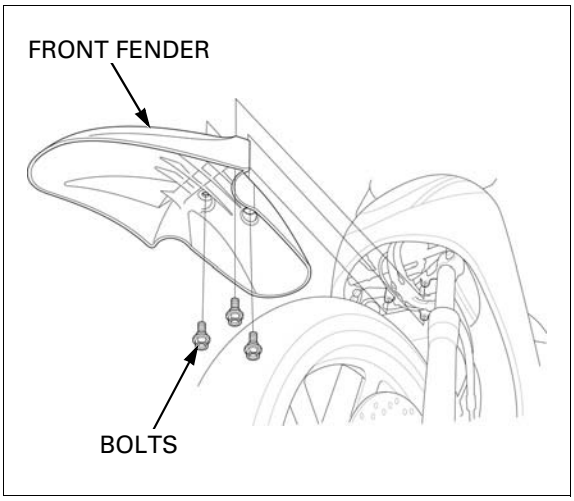

FLOOR SIDE COVER

Remove the bolt and special bolt.

Release the rear end slot of the floor side cover from the tab on the floor panel.
Release the three hooks and three tabs on the floor side cover from the grooves on the floor panel.
Remove the floor side cover by releasing the two tabs on the floor side cover from the grooves on the front lower cover.

Installation is in the reverse order of removal.

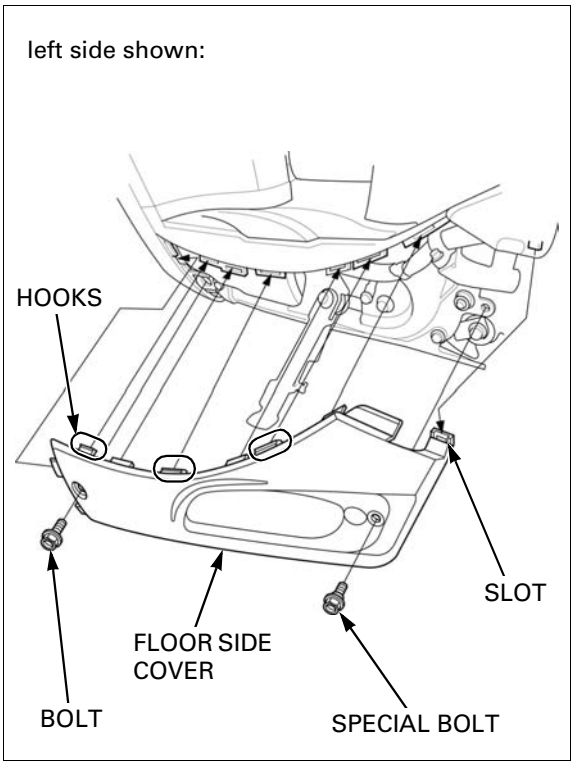

UNDER COVER

Remove the following:

– floor side cover (page 3-8)
– four washer bolts

Release the radiator reserve tank over flow hose from the hose guide.
Slide the under cover backward and release the front tabs to remove the under cover.

Installation is in the reverse order of removal.

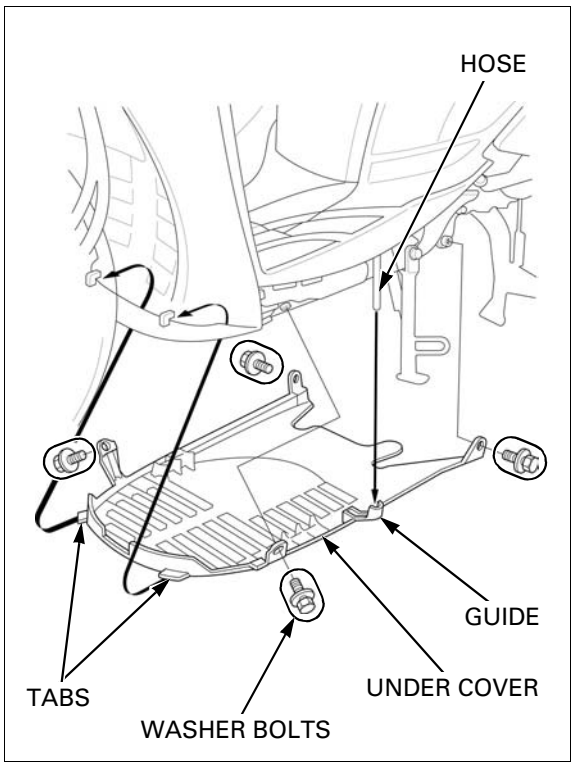

FRONT UPPER COVER

Remove the two special screws.

Be careful not to damage the tab on the front upper cover.

Release the two snap fit clips (page 3-4) of the front upper cover from the front lower cover slots.
Remove the front upper cover by releasing the tabs on the front upper cover from the front lower cover.

Installation is in the reverse order of removal.

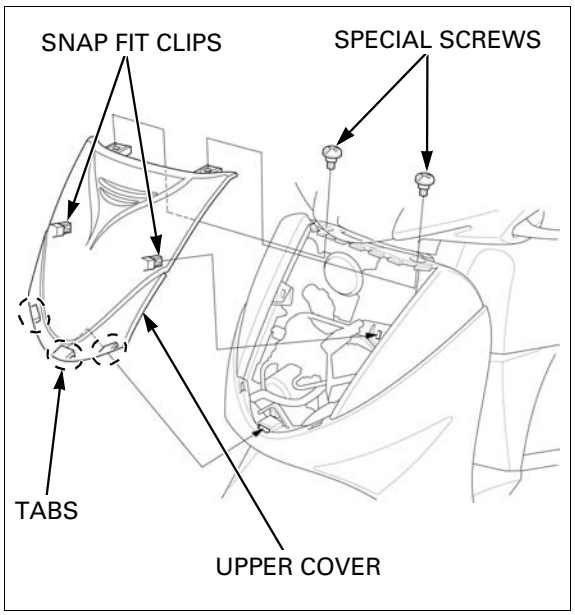

FRONT INNER COVER

REMOVAL/INSTALLATION

Remove the following:

- front upper cover (page 3-9)
- rear handlebar cover (page 3-14)
- two screws and luggage hook
- four tapping screws

Disconnect the accessory socket 2P connector.

Be careful not to damage the tab on the front inner cover.

Release the six snap fit clips (page 3-4) of the front lower cover from the front inner cover slots.
Raise the lower portion of the inner cover and release the six tabs from the floor panel.
Remove the front inner cover from the handlebar post area while spreading its upper portion.

Installation is in the reverse order of removal.

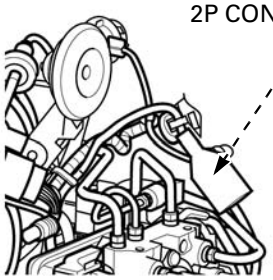

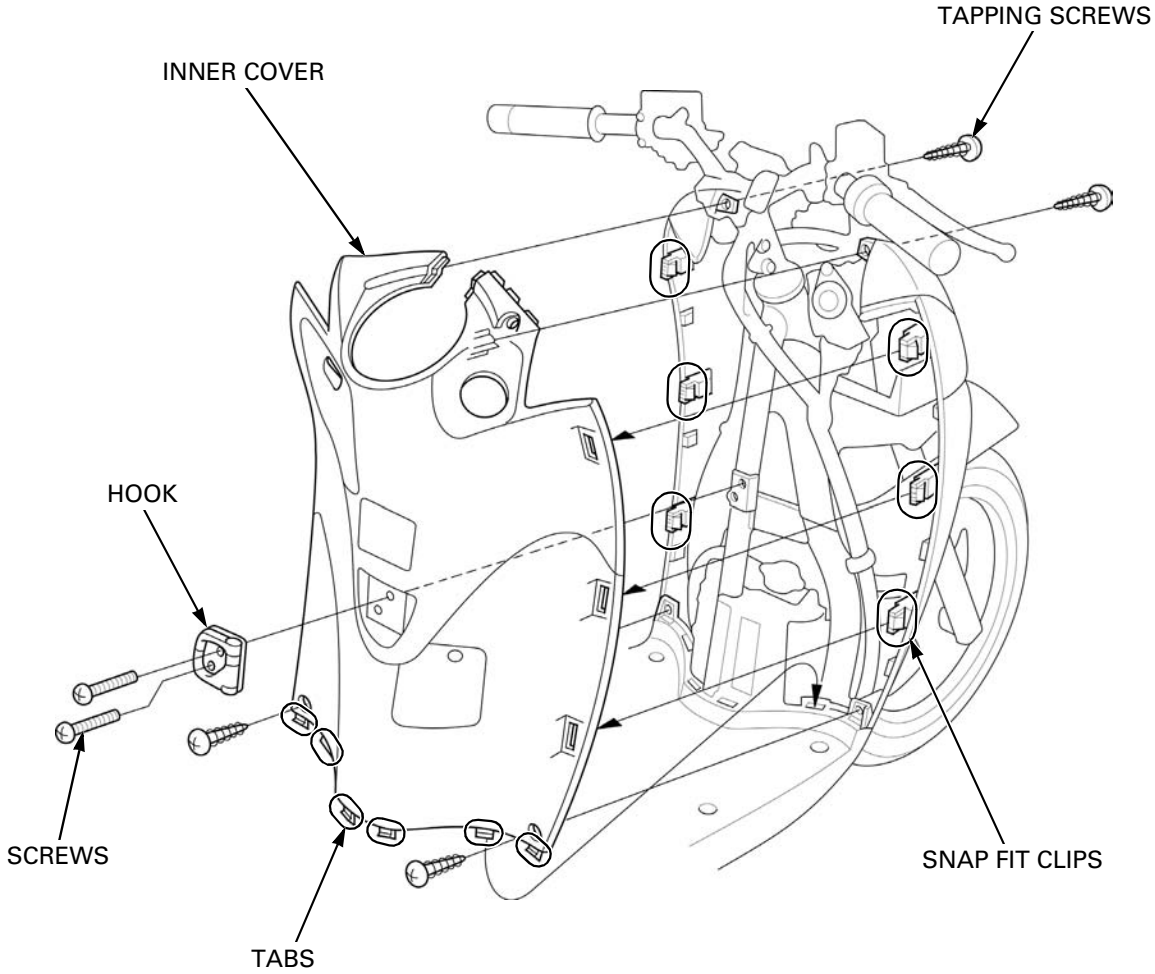

DISASSEMBLY/ASSEMBLY

Remove the seven tapping screws.

Release the six tabs on the front upper inner cover from the front lower inner cover.

Remove the tapping screw and pocket lid from the front upper inner cover.

Remove the tapping screw and radiator maintenance lid from the front lower inner cover.

Assembly is in the reverse order of disassembly.

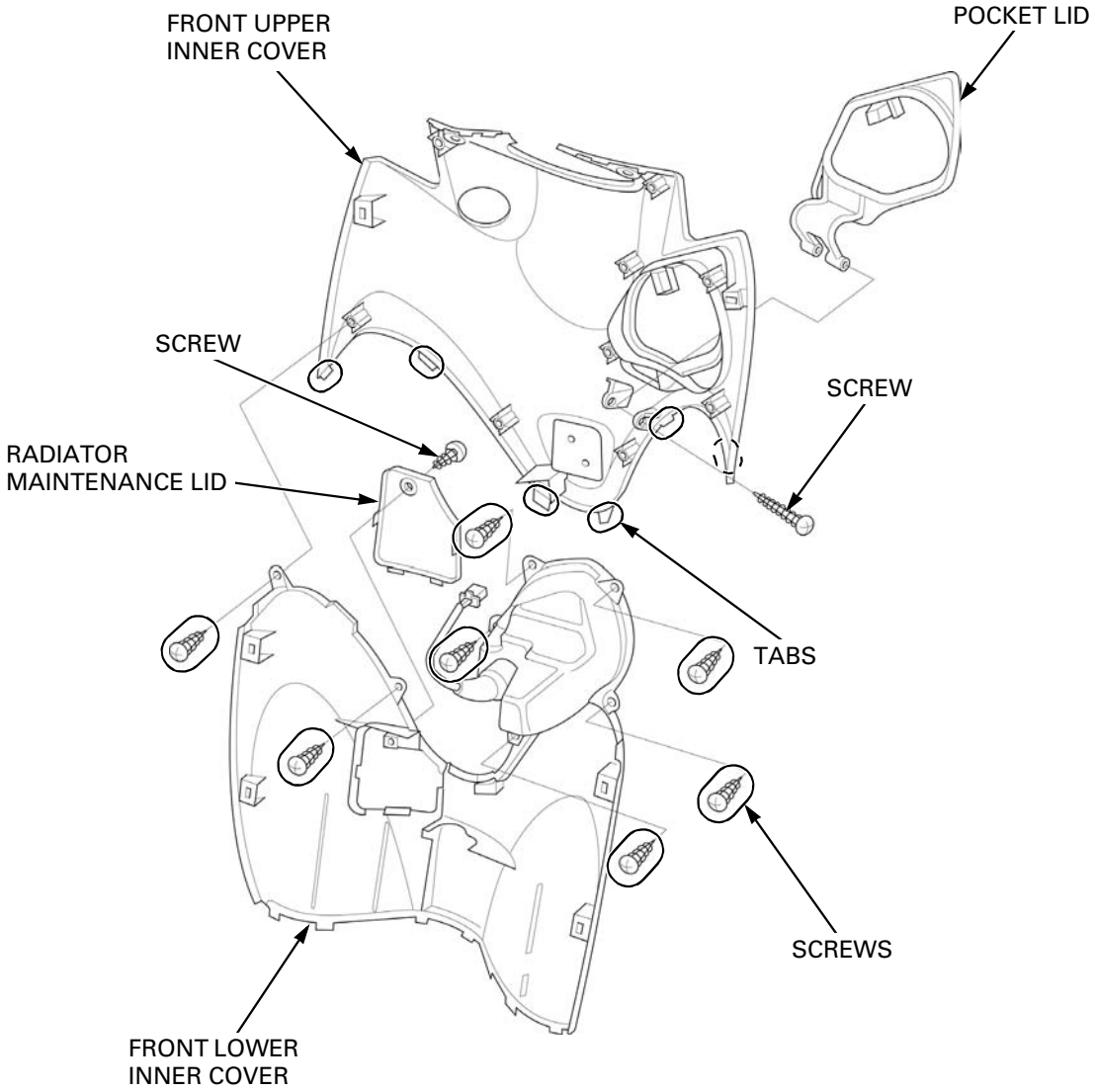

FRONT LOWER COVER

Remove the following:
- front upper cover (page 3-9)
- floor side cover (page 3-8)
- front wheel (page 15-6)
- front fender (page 3-8)
- four screws
- washer bolt
- special bolt

Be careful not to damage the tab on the center body cover.

Release the two bosses from the grommets and six snap fit clips (page 3-4) of the front lower cover from the front inner cover slots.

Release the accessory socket wire band from the front lower cover.
Release the left turn signal/position wire from the wire band.
While supporting the front lower cover and disconnect the turn signal/position light 3P connectors then remove the front lower cover.

Route the wires properly (page 1-19).

Installation is in the reverse order of removal.

- Align the mating areas of the front lower cover and front inner cover properly.

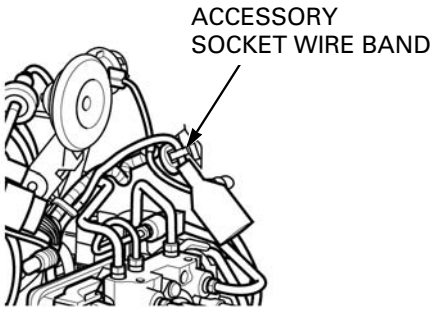

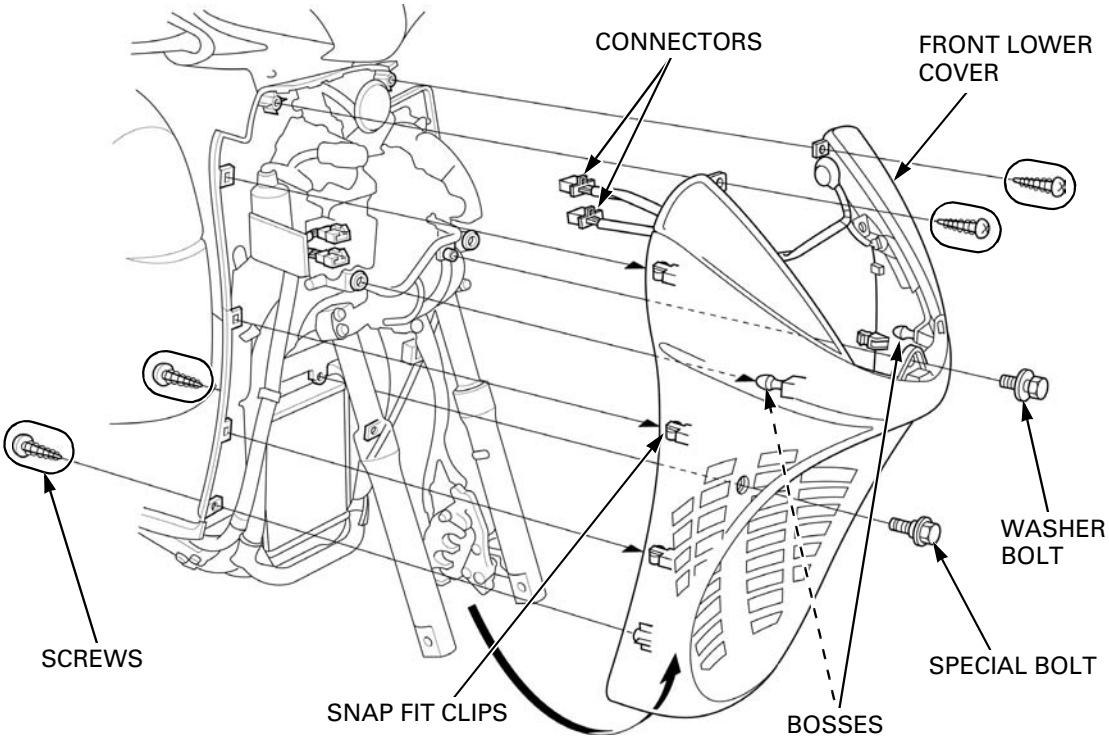

FLOOR PANEL

Remove the following:

- body cover (page 3-6)
- floor side cover (page 3-8)
- front inner cover (page 3-10)
- battery (page 19-6)
- starter relay (page 21-15)

Release the following:

- fuse box A
- DLC
- fuse box B (ABS type only)
- ABS service check connector (ABS type only)

Remove the two screws, four washer bolts and special bolt.
Remove the tapping screw and wire holder.

Pull out the electric cables, wire harness, fuse box A, fuse box B (ABS type only), DLC and ABS service check connector (ABS type only) through the hole of the floor panel.

Remove the floor panel.

Route the cables properly (page 1-19).

Installation is in the reverse order of removal.

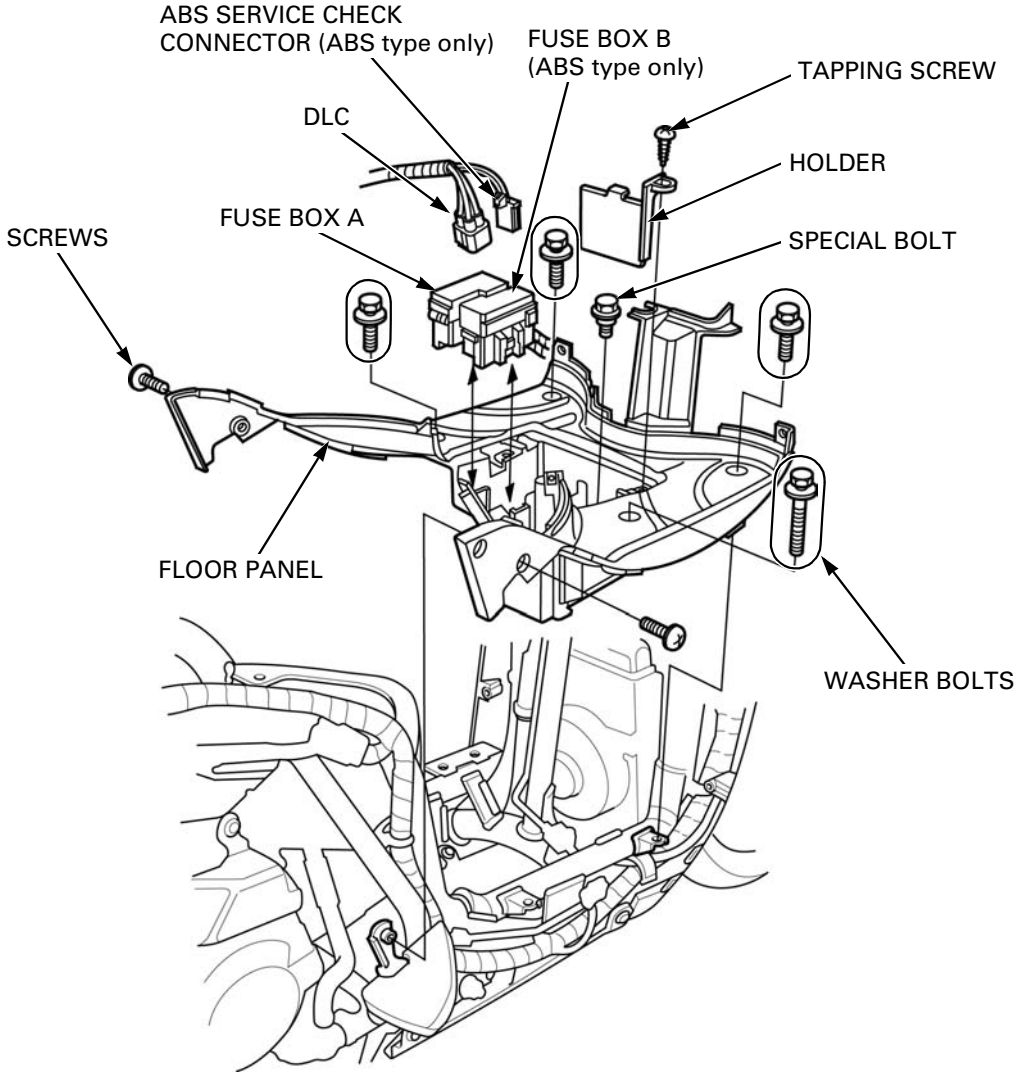

FRONT HANDLEBAR COVER

Remove the front upper cover (page 3-9).

Remove the following:

– rear view mirrors
– handlebar post lid (by sliding it forward)
– four tapping screws

Push the rear handlebar cover and release the four tabs of the front handlebar cover.

Be careful not to scratch the front inner cover.

Disconnect the headlight 3P (black) connector and remove the front handlebar cover.

Route the headlight wire properly (page 1-19).

Installation is in the reverse order of removal.

TORQUE:
Rear view mirror lock nut:
34 N·m (3.5 kgf·m, 25 lbf·ft)

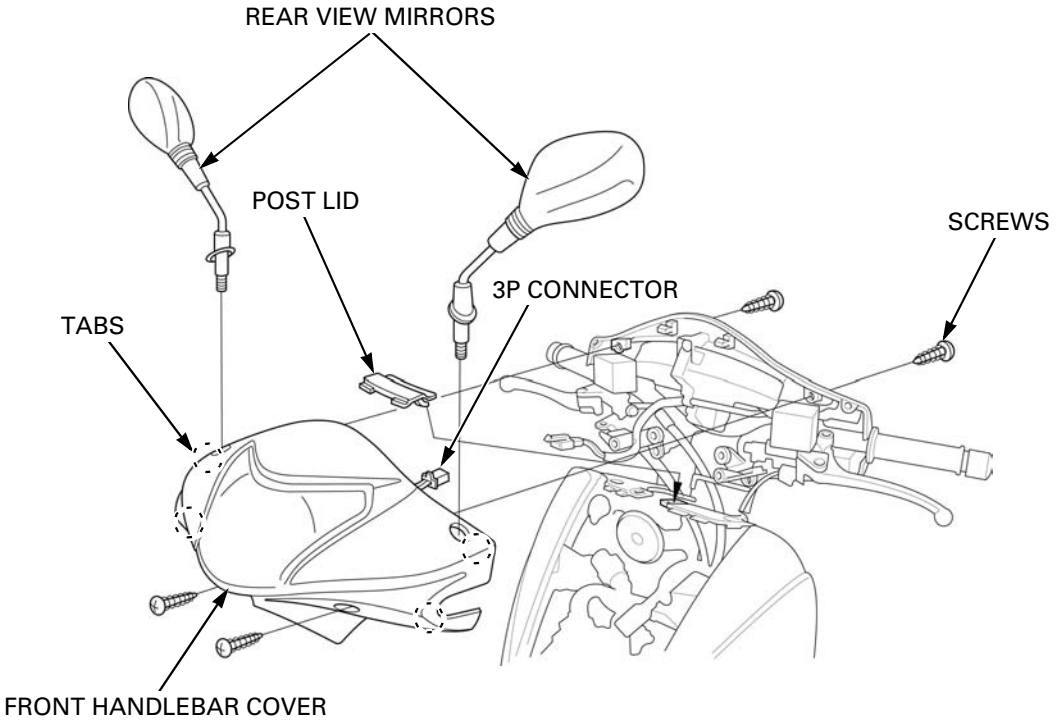

REAR HANDLEBAR COVER

Remove the front handlebar cover (page 3-14).

Remove the following:

– two tapping screws (front side)
– screw (rear side)

Remove the rear handlebar cover from the handlebar and disconnect the handlebar sub harness 12P (Gray) and combination meter 16P connectors.

Route the wires properly (page 1-19).

Installation is in the reverse order of removal.

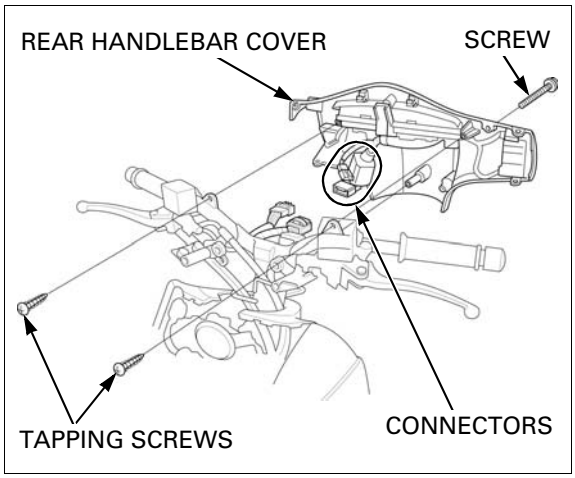

EXHAUST PIPE/MUFFLER

Remove the maintenance lid (page 3-4).

Remove the two special bolts and exhaust pipe protector.

Loosen the exhaust pipe band bolt.
Remove the two exhaust pipe joint nuts.
Remove the three bolts and exhaust pipe/muffler then remove the gasket.
Separate the exhaust pipe and muffler, then remove the gasket.

When installing the exhaust pipe/muffler, replace the gaskets with new ones.

Installation is in the reverse order of removal.

When removing the exhaust pipe stud bolts, tighten them to the specified torque.

TORQUE: 9 N·m (0.9 kgf·m, 6.6 lbf·ft)

Check that the exhaust pipe stud bolt protrusion from the cylinder head is specified length as shown.

SPECIFIED LENGTH: 34 mm (1.3 in)

Tighten the exhaust pipe joint nuts, exhaust pipe band bolt and muffler mounting bolts in the sequence as shown.

TORQUE:
Exhaust pipe joint nut: 29 N·m (3.0 kgf·m, 21 lbf·ft)
Muffler mounting bolt: 49 N·m (5.0 kgf·m, 36 lbf·ft)
Exhaust pipe band bolt: 22 N·m (2.2 kgf·m, 16 lbf·ft)

After installation, inspect the exhaust system for leaks.

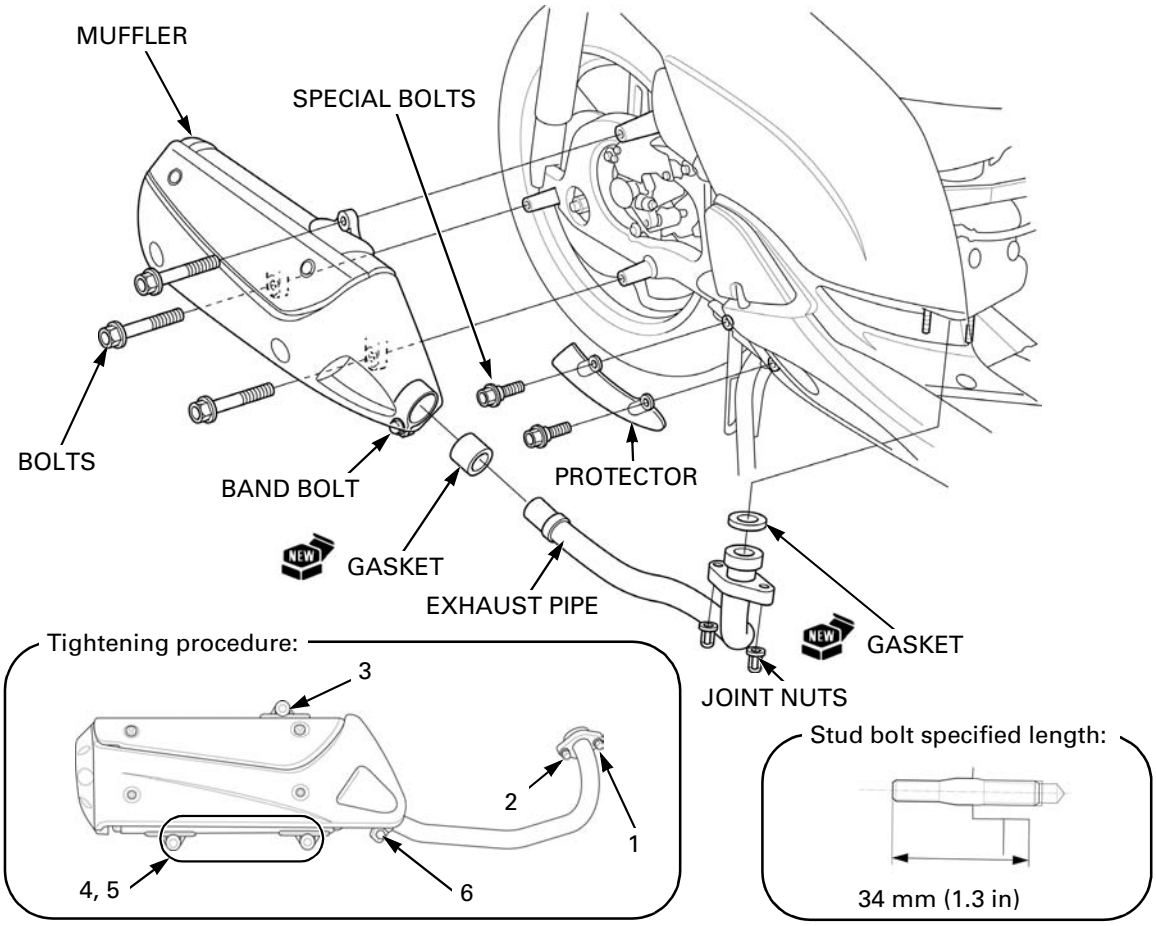

SIDESTAND

Remove the following:

– left floor side cover (page 3-8)
– sidestand switch (page 22-21)

Support the scooter securely using the centerstand.

Unhook the return springs.
Remove the pivot nut, bolt and sidestand.

Installation is in the reverse order of removal.
At installation, apply grease to the pivot bolt sliding surfaces.

TORQUE:

Sidestand pivot bolt	**10 N·m (1.0 kgf·m, 7 lbf·ft)**
Sidestand pivot nut	**30 N·m (3.1 kgf·m, 22 lbf·ft)**

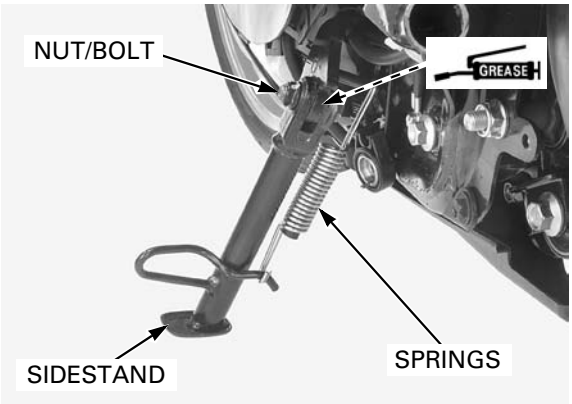

CENTERSTAND

Retract the centerstand and support the scooter securely.

Remove the following from the right side:

– spring
– cotter pin

Remove the following from the left side:

– spring
– mounting bolt
– mounting collar
– pivot shaft
– centerstand

Installation is in the reverse order of removal.

- Apply grease to the pivot areas.
- Always replace the cotter pin with new one.

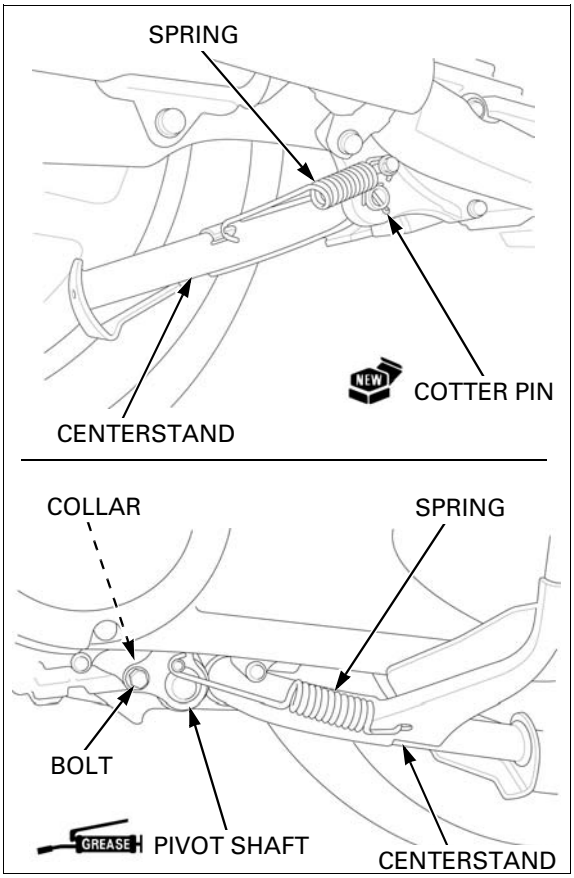

4. MAINTENANCE

4

SERVICE INFORMATION 4-2
MAINTENANCE SCHEDULE 4-4
FUEL LINE 4-5
THROTTLE OPERATION 4-5
AIR CLEANER 4-6
CRANKCASE BREATHER 4-7
SPARK PLUG 4-7
VALVE CLEARANCE 4-8
ENGINE OIL 4-10
ENGINE OIL FILTER 4-12
RADIATOR COOLANT 4-14
COOLING SYSTEM 4-14
SECONDARY AIR SUPPLY SYSTEM 4-15
DRIVE BELT 4-15
BELT CASE AIR CLEANER 4-16
FINAL DRIVE OIL 4-17
BRAKE FLUID 4-18
BRAKE PADS WEAR 4-19
BRAKE SYSTEM 4-19
HEADLIGHT AIM 4-20
CLUTCH SHOES WEAR 4-21
SIDESTAND 4-21
SUSPENSION 4-21
NUTS, BOLTS, FASTENERS 4-22
WHEELS/TIRES 4-22
STEERING HEAD BEARINGS 4-24

SERVICE INFORMATION

GENERAL

- Place the scooter on a level ground before starting any work.
- The exhaust contains poisonous carbon monoxide gas that may cause loss of consciousness and may lead to death. Run the engine in an open area or with an exhaust evacuation system in an enclosed area.

SPECIFICATIONS

ITEM			SPECIFICATIONS
Throttle grip free play			2 – 6 mm (0.1 – 0.2 in)
Spark plug			LMAR8A-9 (NGK)
Spark plug gap			0.8 – 0.9 mm (0.03 – 0.04 in)
Valve clearance		IN	0.16 ± 0.03 mm (0.006 ± 0.001 in)
		EX	0.22 ± 0.03 mm (0.009 ± 0.001 in)
Recommended engine oil			Honda "4-stroke motorcycle oil" or an equivalent API service classification: SG or higher (except oils labeled as energy conserving on the circular API service label) Viscosity: SAE 10W-30 JASO T 903 standard: MB
Engine oil capacity	After draining		1.2 liter (1.3 US qt, 1.1 Imp qt)
	After draining/filter change		1.4 liter (1.5 US qt, 1.2 Imp qt)
	After disassembly		1.7 liter (1.8 US qt, 1.5 Imp qt)
Engine idle speed			1,500 ± 100 min^{-1} (rpm)
Drive belt width			Service limit: 25.5 mm (1.00 in)
Recommended final drive oil			Honda "4-stroke motorcycle oil" or an equivalent API service classification: SG or higher (except oils labeled as energy conserving on the circular API service label) Viscosity: SAE 10W-30 JASO T 903 standard: MA
Final drive oil capacity	After draining		0.28 liter (0.30 US qt, 0.25 Imp qt)
	After disassembly		0.30 liter (0.32 US qt, 0.26 Imp qt)
Recommended brake fluid			DOT 4
Clutch shoe lining thickness			Service limit: 1.0 mm (0.04 in)
Cold tire pressure	Driver only	Front	200 kPa (2.00 kgf/cm^2, 28 psi)
		Rear	225 kPa (2.25 kgf/cm^2, 33 psi)
	Driver and passenger	Front	200 kPa (2.00 kgf/cm^2, 28 psi)
		Rear	225 kPa (2.25 kgf/cm^2, 33 psi)
Tire size		Front	110/70-16 M/C 52P
		Rear	130/70-16 M/C 61P
Tire brand	BRIDGESTONE	Front	HOOP B03G
		Rear	HOOP B02G
Minimum tire tread depth		Front	1.5 mm (0.06 in)
		Rear	2.0 mm (0.08 in)

TORQUE VALUES

Spark plug	16 N·m (1.6 kgf·m, 12 lbf·ft)	
Air cleaner housing cover screw	1.5 N·m (0.2 kgf·m, 1.1 lbf·ft)	
Timing hole cap	6 N·m (0.6 kgf·m, 4.4 lbf·ft)	Apply engine oil to the threads and seating surface
Engine oil drain bolt	25 N·m (2.5 kgf·m, 18 lbf·ft)	Apply engine oil to the threads and seating surface
Oil filter cartridge	26 N·m (2.7 kgf·m, 19 lbf·ft)	Apply engine oil to the threads and seating surface
Oil filter boss	18 N·m (1.8 kgf·m, 13 lbf·ft)	See page 4-12
Belt case air cleaner housing socket bolt	10 N·m (1.0 kgf·m, 7 lbf·ft)	
Final drive oil check bolt	13 N·m (1.3 kgf·m, 10 lbf·ft)	
Final drive oil filler bolt	13 N·m (1.3 kgf·m, 10 lbf·ft)	
Final drive oil drain bolt	13 N·m (1.3 kgf·m, 10 lbf·ft)	

TOOL

Oil filter wrench
07HAA-PJ70101

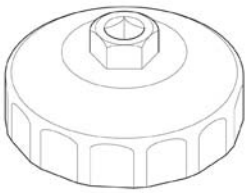

MAINTENANCE SCHEDULE

Perform the Pre-ride inspection in the Owner's Manual at each scheduled maintenance period.

I: Inspect and Clean, Adjust, Lubricate or Replace if necessary. C: Clean. R: Replace. A: Adjust. L: Lubricate.

The following items require some mechanical knowledge. Certain items (particularly those marked * and **) may require more technical information and tools. Consult an authorized Honda dealer.

	FREQUENCY / ITEMS	WHICHEVER COMES FIRST		ODOMETER READING (NOTE 1)							REFER TO PAGE
			x 1,000 km	1	6	12	18	24	30	36	
			x 1,000 mi	0.6	4	8	12	16	20	24	
			Months		6	12	18	24	30	36	
*	FUEL LINE					I		I		I	4-5
*	THROTTLE OPERATION					I		I		I	4-5
	AIR CLEANER	NOTE 2					R			R	4-6
	CRANKCASE BREATHER	NOTE 3			C	C	C	C	C	C	4-7
	SPARK PLUG					R		R		R	4-7
*	VALVE CLEARANCE							I			4-8
	ENGINE OIL			R	R	R	R	R	R	R	4-10
	ENGINE OIL FILTER			R		R		R		R	4-12
	RADIATOR COOLANT	NOTE 4				I		I		R	4-14
*	COOLING SYSTEM					I		I		I	4-14
*	SECONDARY AIR SUPPLY SYSTEM					I		I		I	4-15
*	DRIVE BELT	NOTE 5				I	R		I	R	4-15
	BELT CASE AIR CLEANER					C		C		C	4-16
*	FINAL DRIVE OIL	NOTE 6									4-17
	BRAKE FLUID	NOTE 4			I	I	R	I	I	R	4-18
	BRAKE PADS WEAR				I	I	I	I	I	I	4-19
	BRAKE SYSTEM			I		I		I		I	4-19
*	HEADLIGHT AIM					I		I		I	4-20
**	CLUTCH SHOES WEAR				I	I	I	I	I	I	4-21
	SIDESTAND					I		I		I	4-21
*	SUSPENSION					I		I		I	4-21
*	NUTS, BOLTS, FASTENERS			I		I		I		I	4-22
**	WHEELS/TIRES					I		I		I	4-22
**	STEERING HEAD BEARINGS			I		I		I		I	4-24

* Should be serviced by an authorized Honda dealer, unless the owner has proper tools and service data and is mechanically qualified.

** In the interest of safety, we recommend these items be serviced only by an authorized Honda dealer.

Honda recommends that an authorized Honda dealer should road test the scooter after each periodic maintenance is carried out.

NOTES:
1. At higher odometer readings, repeat at the frequency interval established here.
2. Service more frequently when riding in unusually wet or dusty areas.
3. Service more frequently when riding in rain or at full throttle.
4. Replace every 2 years, or at indicated odometer interval, whichever comes first. Replacement requires mechanical skill.
5. Inspect every 12,000 km (8,000 mi) after replacement.
6. Replace every 2 years. Replacement requires mechanical skill.

FUEL LINE

Remove the luggage box (page 3-5).

Check the fuel feed hose between the fuel pump and injector for deterioration, damage or leakage. Replace the fuel feed hose if necessary (page 6-44).

Also, check the fuel feed hose fittings for damage or looseness.

Make sure that the fuel hose is routed on the fuel tank flange as shown.

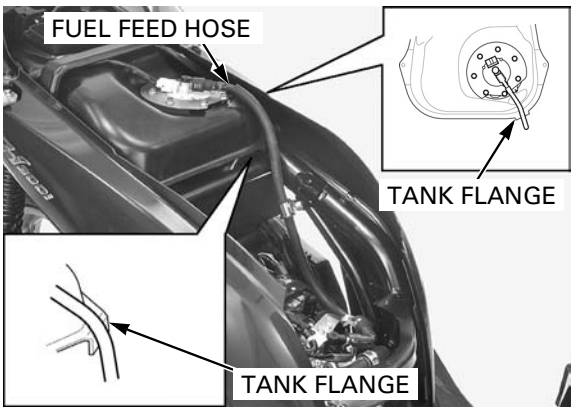

THROTTLE OPERATION

Check for any deterioration or damage to the throttle cable. Check the throttle grip for smooth operation. Check that the throttle opens and automatically closes in all steering positions.

If the throttle grip does not return properly, lubricate the throttle cable and overhaul and lubricate the throttle grip housing.
For cable lubrication; disconnect the throttle cable at its upper end. Thoroughly lubricate the cable and its pivot point with a commercially available cable lubricant or a light weight oil.

If the throttle grip still does not return properly, replace the throttle cable.

With the engine idling, turn the handlebar all the way to the right and left to ensure that the idle speed does not change. If idle speed increases, check the throttle grip free play and the throttle cable connection.

Measure the throttle grip free play at the throttle grip flange.

FREE PLAY: 2 – 6 mm (0.1 – 0.2 in)

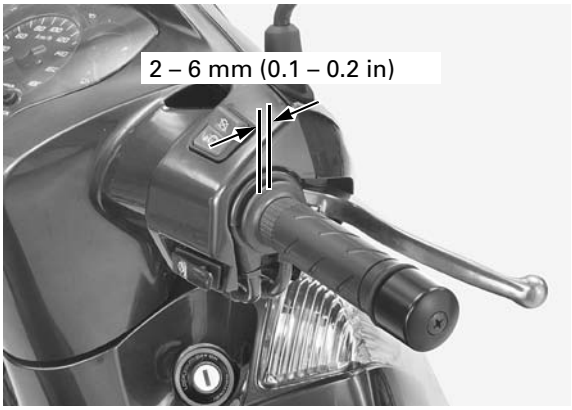

Minor adjustments are made with the upper adjuster.

Slide the rubber boot off the adjuster.
Loosen the lock nut, turn the adjuster as required and tighten the lock nut.

Install the rubber boot securely.

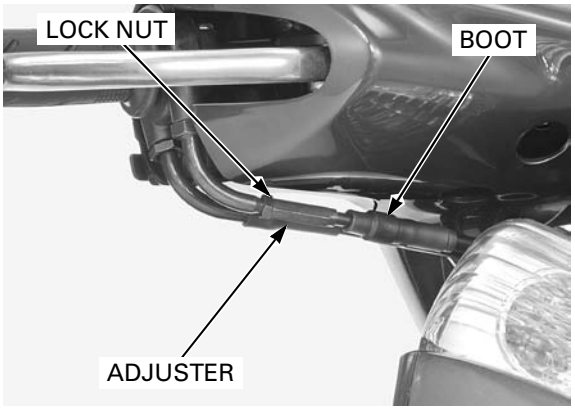

Major adjustments are made with the lower adjuster on the throttle body.

Remove the luggage box (page 3-5).

Loosen the lock nut, turn the adjusting nut as required and tighten the lock nut.

After adjustment, recheck the throttle operation.

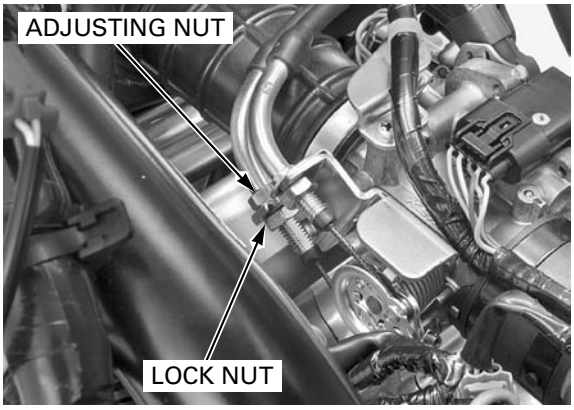

AIR CLEANER

- The viscous paper element type air cleaner cannot be cleaned because the element contains a dust adhesive.
- If the scooter is used in unusually wet or dusty areas, more frequent inspections are required.

Remove the following:

– belt case air cleaner housing (page 4-16)
– seven screws
– air cleaner housing cover

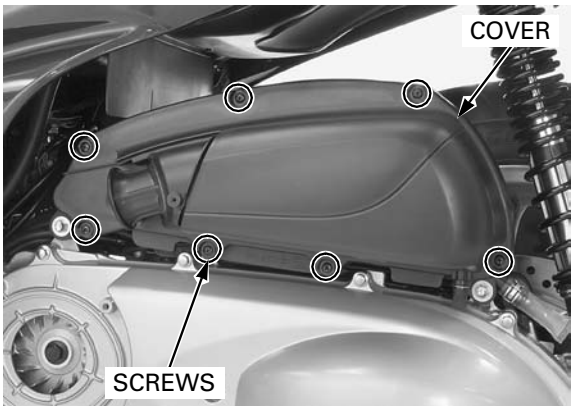

– air cleaner element

Replace the element in accordance with the maintenance schedule (page 4-4) or any time it is excessively dirty or damaged.

Clean the inside of the air cleaner housing and cover.
Make sure the rubber seals in the housing are in position and in good condition.

Install a new element and the cover, and tighten the seven screws.

TORQUE: Air cleaner housing cover screw
1.5 N·m (0.2 kgf·m, 1.1 lbf·ft)

Install the belt case air cleaner housing (page 4-16).

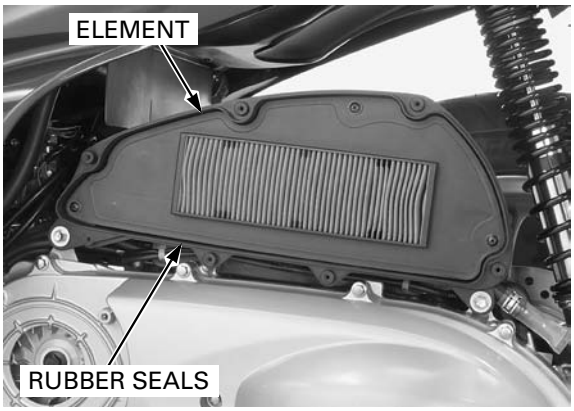

CRANKCASE BREATHER

- Service more frequently when ridden in rain, at full throttle, or after the scooter is washed or overturned. Service if the deposit level can be seen in the transparent section of the hose.

Remove the crankcase breather drain plug and drain the deposits into a suitable container, then reinstall it securely.

SPARK PLUG

Remove the maintenance lid (page 3-4).

Clean around the spark plug base with compressed air before removing the plug, and be sure that no debris is allowed to enter into the combustion chamber.

Disconnect the spark plug cap and remove the spark plug.

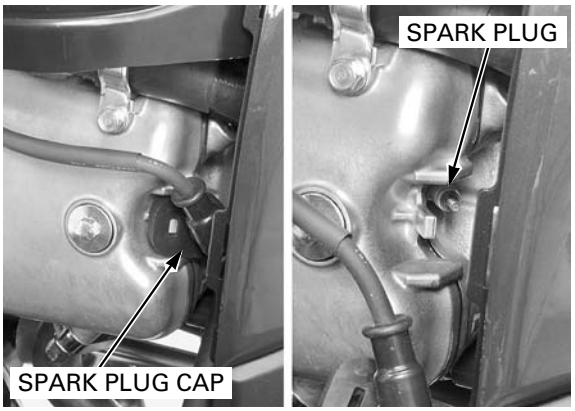

Check the insulator for cracks or damage, and the electrodes for wear, fouling or discoloration. Replace the plug if necessary.

RECOMMENDED SPARK PLUG:
Standard: LMAR8A-9 (NGK)

Clean the spark plug electrodes with a wire brush or special plug cleaner.

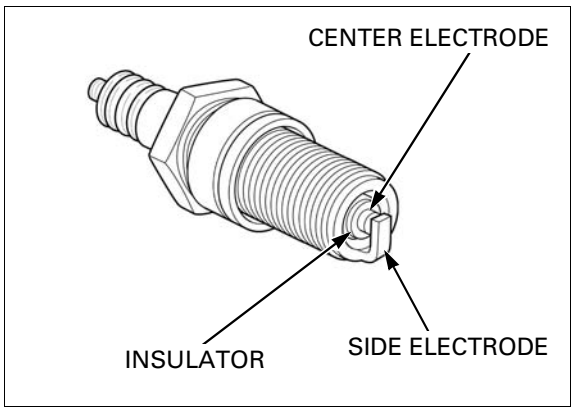

Check the gap between the center and side electrodes with a wire-type feeler gauge.

SPARK PLUG GAP: 0.8 – 0.9 mm (0.03 – 0.04 in)

If necessary, adjust the gap by bending the side electrode carefully.

Install and hand tighten the spark plug to the cylinder head, then tighten the spark plug to the specified torque.

TORQUE: 16 N·m (1.6 kgf·m, 12 lbf·ft)

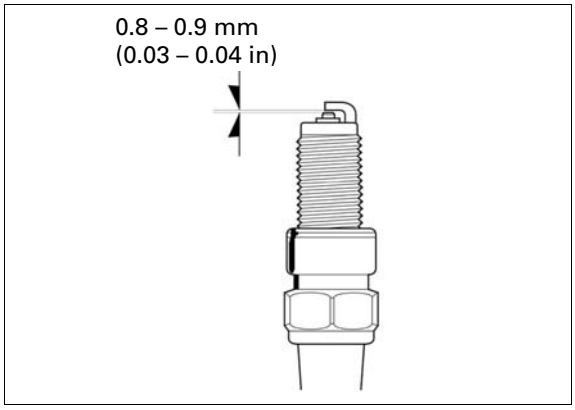

Connect the spark plug cap by aligning the hole of the spark plug cap with the tab of the cylinder head cover.

Install the maintenance lid (page 3-4).

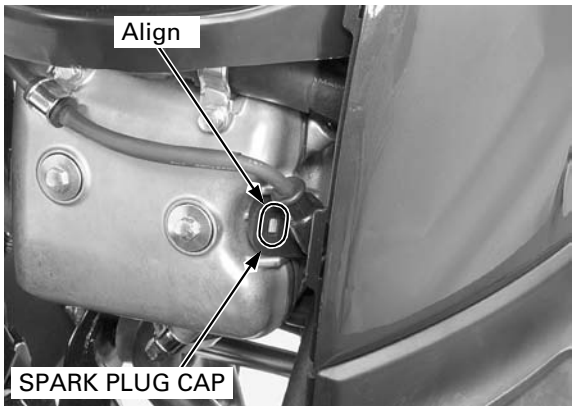

VALVE CLEARANCE

INSPECTION

- Inspect and adjust the valve clearance while the engine is cold (below 35°C/95°F).
- Check the engine idle speed (page 6-77) after the valve clearance inspection.

Remove the following:

– maintenance lid (page 3-4)
– cylinder head cover (page 9-6)
– belt case air cleaner housing (page 4-16)

Remove the timing hole cap from the right crankcase cover.

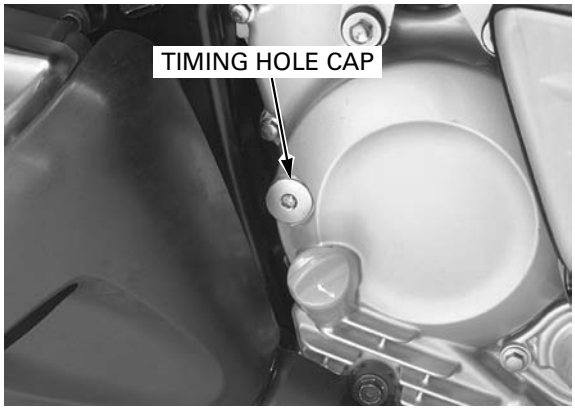

Rotate the drive pulley (crankshaft) counterclockwise and align the T mark on the flywheel with the index line in the crankcase cover.
Make sure the piston is at TDC (Top Dead Center) of the compression stroke by moving the rocker arms. If the exhaust rocker arm is tight, rotate the crankshaft one full turn (360 °) and align the T mark again.

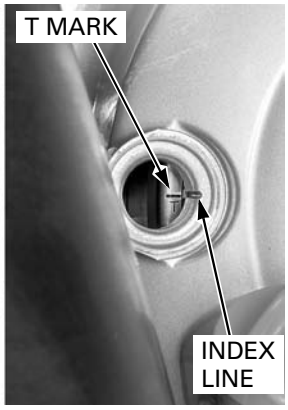

Check the clearances of each valve by inserting the feeler gauge between the rocker arm and shim.

VALVE CLEARANCE:
IN: 0.16 ± 0.03 mm (0.006 ± 0.001 in)
EX: 0.22 ± 0.03 mm (0.009 ± 0.001 in)

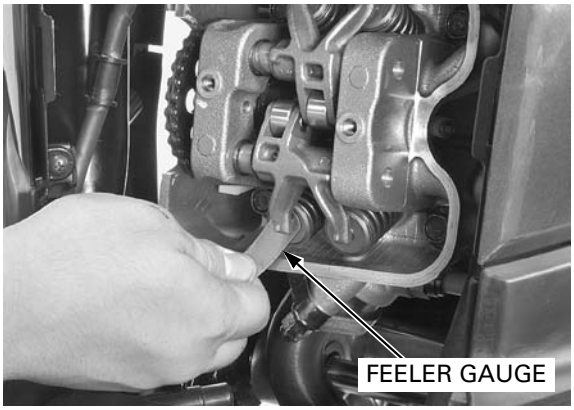

Move the rocker arm to the spring side and remove the shim.

- Do not allow the shims to fall into the crankcase.
- Mark all shims to ensure correct reassembly in their original locations.
- The shims can be easily removed with a tweezers or magnet.

Clean the valve shim contact area with compressed air.

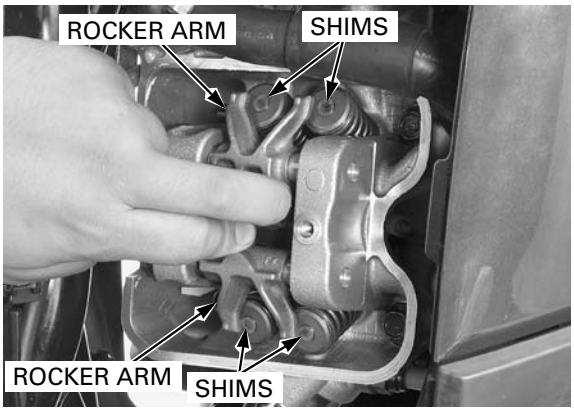

Measure the shim thickness and record it.

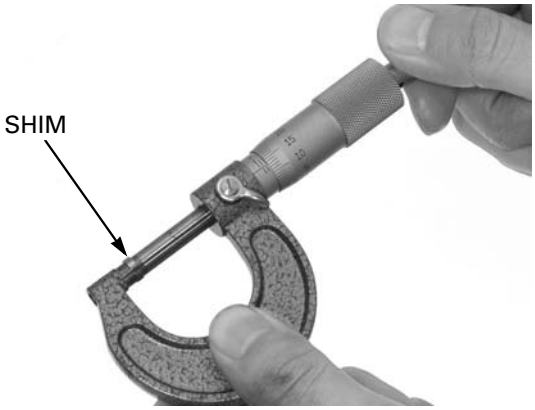

Sixty-nine different thickness shims are available from the thinnest 1.200 mm thickness shim to the thickest 2.900 mm thickness shim in intervals of 0.025 mm.

Calculate the new shim thickness using the equation below.
A = (B – C) + D
A: New shim thickness
B: Recorded valve clearance
C: Specified valve clearance
D: Old shim thickness

- Make sure of the correct shim thickness by measuring the shim by micrometer.
- Reface the valve seat if carbon deposit result in a calculated dimension of over 2.900 mm.

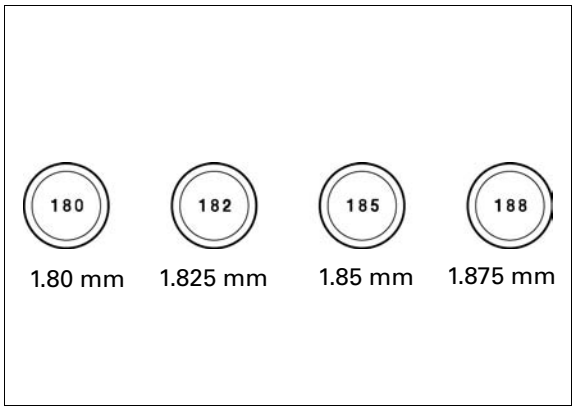

Install the shims in their original locations.

Install the newly selected shim on the valve spring retainer.

Rotate the camshafts by rotating the drive pulley (crankshaft) counterclockwise several times.
Recheck the valve clearance.

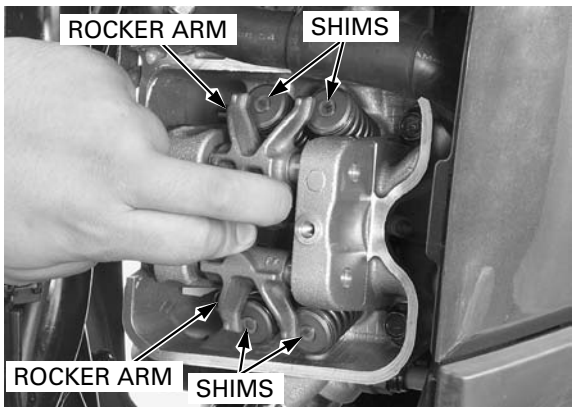

Check that the O-ring is in good condition, replace if necessary.

Apply engine oil to the timing hole cap O-ring.
Apply engine oil to the timing hole threads and seating surface.

Tighten the timing hole cap to the specified torque.

TORQUE: 6 N·m (0.6 kgf·m, 4.4 lbf·ft)

Install the following:

– belt case air cleaner housing (page 4-16)
– cylinder head cover (page 9-24)
– maintenance lid (page 3-4)

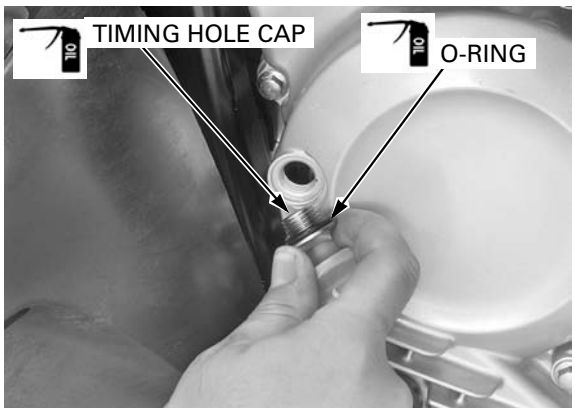

ENGINE OIL

OIL LEVEL CHECK

Place the scooter on its centerstand on a level surface.

Start the engine and let it idle for 3 – 5 minutes.
Stop the engine and wait for 2 – 3 minutes.

Remove the oil filler cap/dipstick and wipe the oil from the dipstick with a clean cloth.

Insert the oil filler cap/dipstick without screwing it in, remove it and check the oil level.

The level should be between the upper and lower level lines on the dipstick.

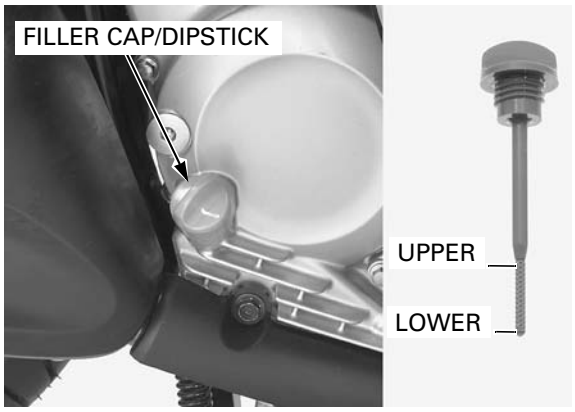

If the oil level is below or near the lower level line, add the recommended oil to the upper level line.

RECOMMENDED ENGINE OIL:

Honda "4-stroke motorcycle oil" or an equivalent API service classification: SG or higher (except oils labeled as energy conserving on the circular API service label)
Viscosity: SAE 10W-30
JASO T 903 standard: MB

- Other viscosities shown in the chart may be used when the average temperature in your riding area is within the indicated range.

OIL VISCOSITIES

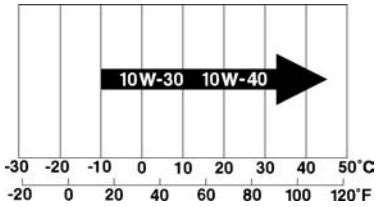

Make sure the O-ring is in good condition.

Apply engine oil to the O-ring and install the oil filler cap/dipstick.

OIL CHANGE

Place the scooter on its centerstand on a level surface.

Remove the oil filler cap/dipstick.

Remove the oil drain bolt and sealing washer, then drain the engine oil completely.

Replace the sealing washer with new one.
Apply engine oil to the oil drain bolt threads and seating surface.
Install and tighten the oil drain bolt to the specified torque.

TORQUE: 25 N·m (2.5 kgf·m, 18 lbf·ft)

Fill the crankcase with recommended engine oil (page 4-10).

OIL CAPACITY:
1.2 liter (1.3 US qt, 1.1 Imp qt) after draining
1.4 liter (1.5 US qt, 1.2 Imp qt) after oil filter change
1.7 liter (1.8 US qt, 1.5 Imp qt) after disassembly

Check that the O-ring on the oil filler cap/dipstick is in good condition, and replace it if necessary.
Install the oil filler cap/dipstick.

Recheck the oil level (page 4-10).

Make sure there are no oil leaks.

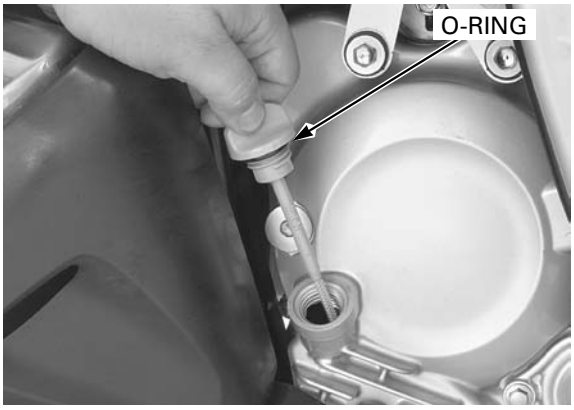

OIL CHANGE INDICATOR

- The oil change indicator appears when the distance covered by scooter arrives at the oil change interval specified in the maintenance schedule.

Reset the oil change indicator after each oil change.
To reset the oil change indicator, press and hold both the trip switch and clock switch for more than 2 seconds while odd meter indicated at ignition switch.
The indicator will disappear.

If the oil is changed before the oil change indicator appears, be sure to reset the oil change indicator after changing the oil.
The indicator will appears for 2 seconds, then disappear.
This means the indicator is reset.

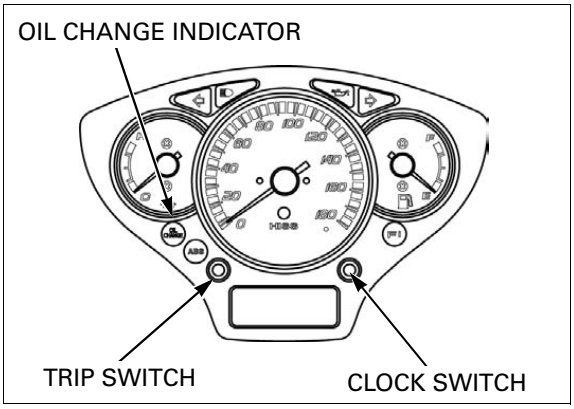

ENGINE OIL FILTER

FILTER CHANGE

Drain the engine oil (page 4-11).

Remove and discard the oil filter cartridge using the special tool.

TOOL:
Oil filter wrench **07HAA-PJ70101**

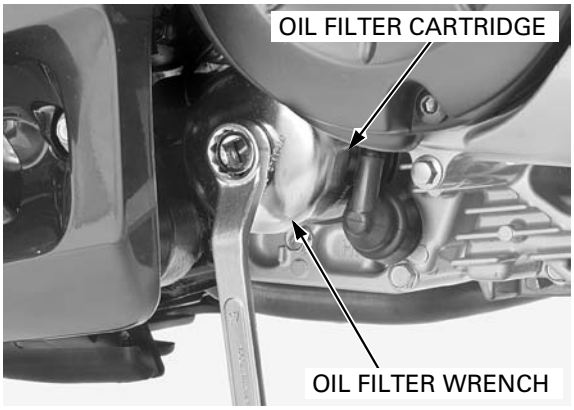

Check that the oil filter boss protrusion from the crankcase is specified length as shown.

SPECIFIED LENGTH: 16 – 17 mm (0.6 – 0.7 in)

When removing the oil filter boss, apply locking agent to the threads (page 1-16).

Install and tighten the oil filter boss to the specified torque.

TORQUE: 18 N·m (1.8 kgf·m, 13 lbf·ft)

Check that the oil filter boss protrusion from the crankcase is specified length (See above).

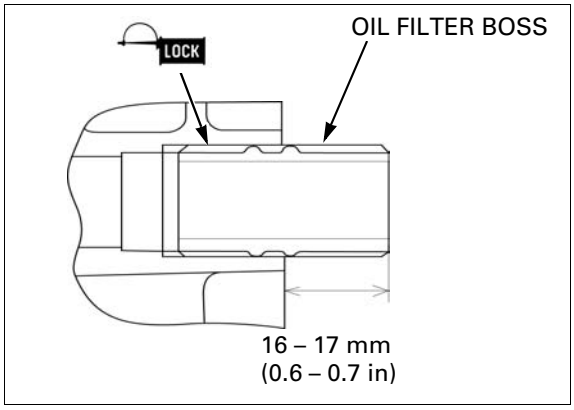

Apply clean engine oil to new oil filter cartridge threads and O-ring.

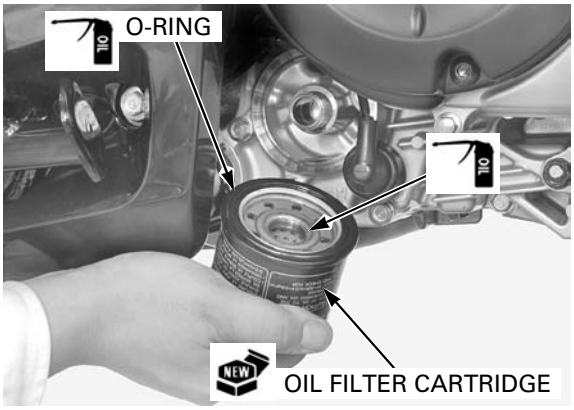

Install the oil filter and tighten it to the specified torque.

TOOL:
Oil filter wrench 07HAA-PJ70101

TORQUE: 26 N·m (2.7 kgf·m, 19 lbf·ft)

Refill the engine oil (page 4-11).

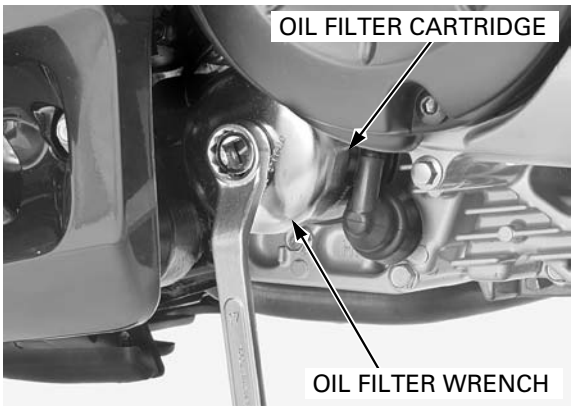

RADIATOR COOLANT

Place the scooter on its centerstand on a level surface.

With the engine running at normal operating temperature and check the coolant level of the reserve tank.
The level should be between the "UPPER" and "LOWER" level lines.

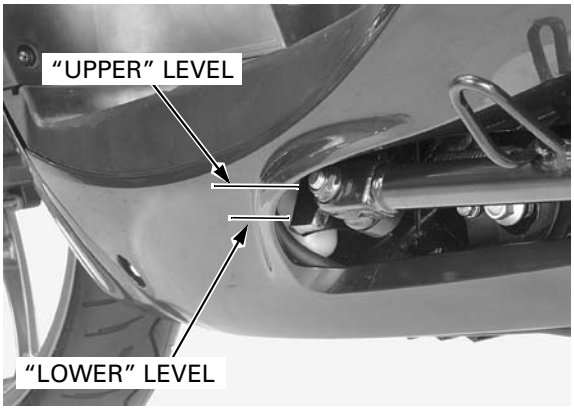

If the level is low, fill the tank as follows:

Remove the maintenance lid (page 3-4).

Remove the screw and reserve tank maintenance lid.
Remove the reserve tank cap and fill the tank to the upper level line with a 1:1 mixture of distilled water and antifreeze (coolant preparation: page 7-6).

Check to see if there are any coolant leaks when the coolant level decreases very rapidly.
If the reserve tank becomes completely empty, there is a possibility of air getting into the cooling system.
Be sure to remove all air from the cooling system (page 7-7).

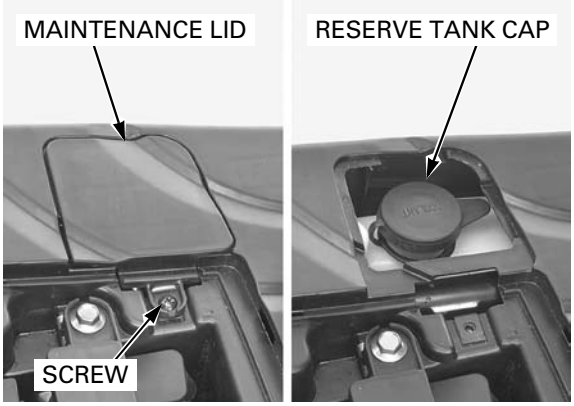

COOLING SYSTEM

Remove the following:

- floor panel (page 3-13)
- front inner cover (page 3-10)

Check for any coolant leakage from the water hoses and hose joints.
Check the water hoses for cracks or deterioration and replace them if necessary.
Check that all hose clamps are tight.

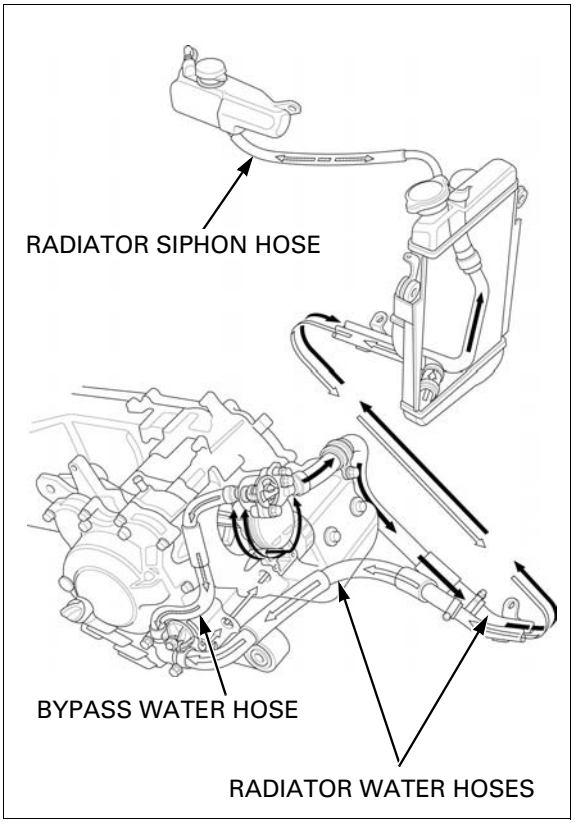

Check the radiator air passage for clogs or damage. Straighten bent fins with a small, flat blade screwdriver and remove insects, mud or other obstructions with compressed air or low pressure water. Replace the radiator if the air flow is restricted over more than 20% of the radiating surface.

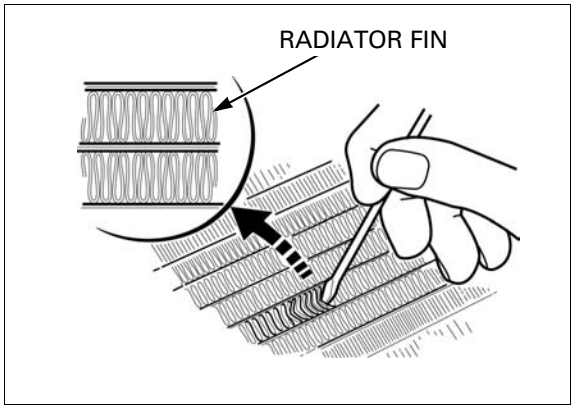

SECONDARY AIR SUPPLY SYSTEM

Remove the luggage box (page 3-5).

Check the air supply hoses between the air cleaner housing and pulse secondary air injection (PAIR) check valve for cracks, deterioration, damage or loose connections.

If the air supply hoses show any signs of heat damage, inspect the PAIR check valve (page 6-79).

For secondary air supply system inspection (page 6-78).

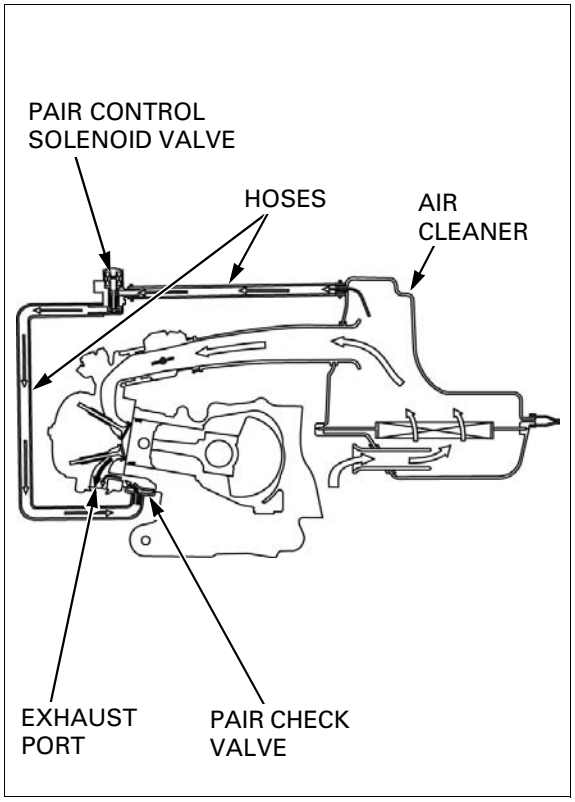

DRIVE BELT

Remove the drive belt (page 11-7).

Check the drive belt for cracks, separation or abnormal or excessive wear.

Measure the drive belt width.

SERVICE LIMIT: 25.5 mm (1.00 in)

If necessary drive belt replacement.

Install the drive belt (page 11-7).

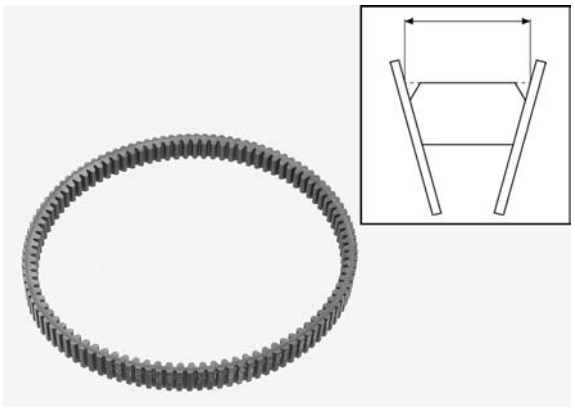

BELT CASE AIR CLEANER

Remove the three socket bolts and screw.
Remove the belt case air cleaner housing from the left crankcase cover.

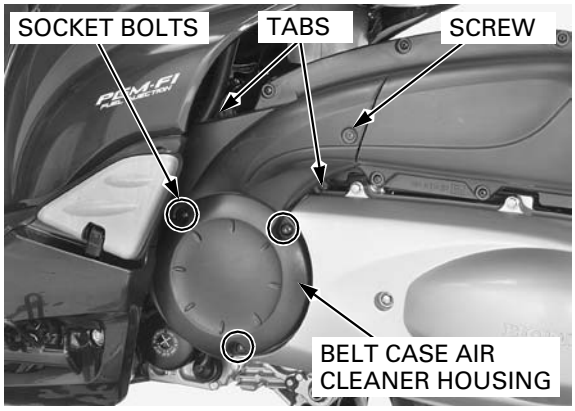

Release the three tabs of the air cleaner base cover from the slots of the air cleaner base.
Remove the air cleaner base cover from the air cleaner base.

Check that the O-ring of the air cleaner base cover is in good condition, replace if necessary.

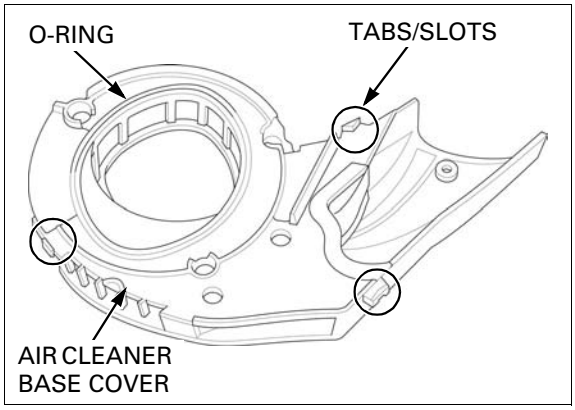

Remove the air cleaner element from the base core.

Do not apply oil to the element.

Wash the element in non-flammable or high flash point solvent.
Squeeze out the solvent and let it dry thoroughly, then install it onto the base core.

Install the belt case air cleaner housing in the reverse order of removal.

TORQUE:
Belt case air cleaner housing socket bolt:
10 N·m (1.0 kgf·m, 7 lbf·ft)

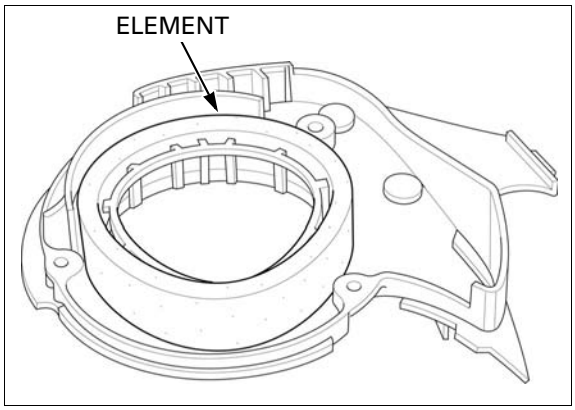

FINAL DRIVE OIL

OIL LEVEL CHECK

Place the scooter on its centerstand on a level surface.

Remove the oil check bolt.
Check whether the oil flows out from the check bolt hole.

If the oil level is low (that is not flow out), add the recommended oil as follows:

Remove the oil filler bolt.

Pour the recommended oil through the oil filler hole until oil flows out from the check bolt hole.

RECOMMENDED FINAL DRIVE OIL:
Honda "4-stroke motorcycle oil" or an equivalent API service classification: SG or higher (except oils labeled as energy conserving on the circular API service label)
Viscosity: SAE 10W-30
JASO T 903 standard: MA

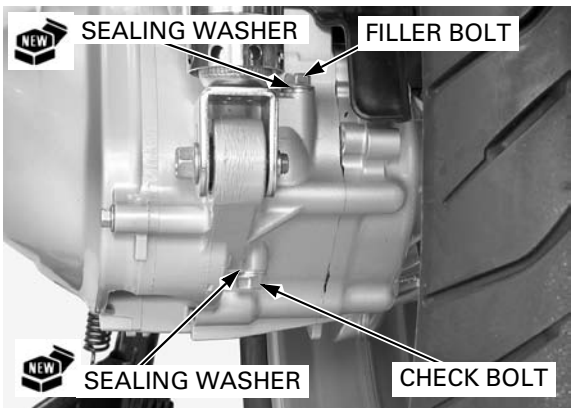

Be careful not to misplace the check bolt and filler bolt.

Install the check bolt (M8 x 25) with a new sealing washer and tighten it.

TORQUE: 13 N·m (1.3 kgf·m, 10 lbf·ft)

Install the filler bolt (M8 x 12) with a new sealing washer and tighten it.

TORQUE: 13 N·m (1.3 kgf·m, 10 lbf·ft)

OIL CHANGE

Remove the oil check bolt and drain bolt, slowly turn the rear wheel and drain the oil.

Be careful not to misplace the check bolt and drain bolt.

After the oil is completely drained, install the drain bolt (M8 x 12) with a new sealing washer and tighten it to the specified torque.

TORQUE: 13 N·m (1.3 kgf·m, 10 lbf·ft)

Fill the final reduction case with recommended oil up to the correct level (page 4-17).

OIL CAPACITY:
0.28 liter (0.30 US qt, 0.25 Imp qt) after draining
0.30 liter (0.32 US qt, 0.26 Imp qt) after disassembly

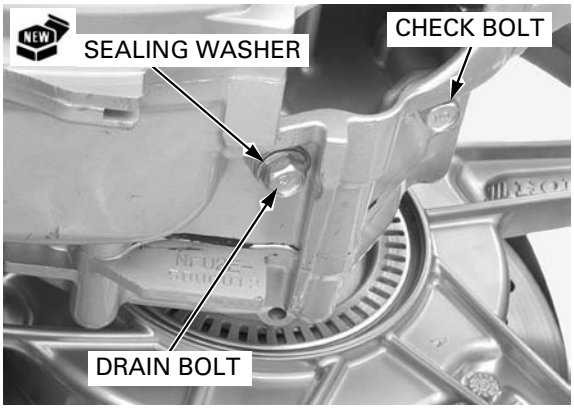

BRAKE FLUID

NOTICE

Spilling fluid can damage painted, plastic or rubber parts. Place a rag over these parts whenever the system is serviced.

- Do not mix different types of fluid, as they are not compatible with each other.
- Do not allow foreign material to enter the system when filling the reservoir.
- When the fluid level of the front master cylinder is low, check the brake pads for wear (page 4-19).
- A low fluid level may be due to wear of the brake pads. If the brake pads are worn, the caliper piston is pushed out, this accounts for a low reservoir level. If the brake pads are not worn and the fluid level is low, check entire system for leaks (page 4-19).

Turn the handlebar to the left so the reservoir is level and check the brake reservoir fluid level through the sight glass.

If the fluid level is near the “LOWER” level mark, fill the reservoir with DOT 4 brake fluid (page 17-8).

BRAKE PADS WEAR

FRONT BRAKE PADS

Check the brake pads for wear.
Replace the brake pads if either pad reaches the bottom of wear limit groove.

Refer to front brake pad replacement (page 17-13).

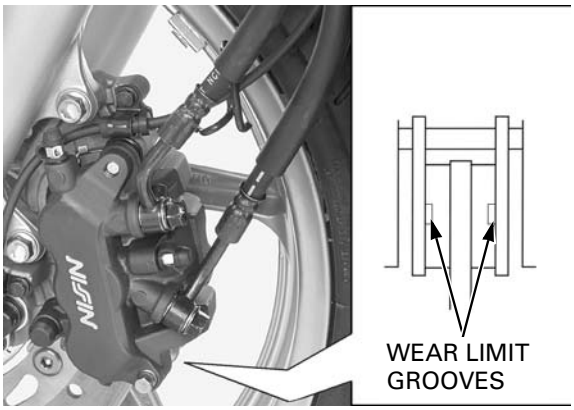

REAR BRAKE PADS

Check the brake pads for wear.
Replace the brake pads if either pad reaches the bottom of wear limit groove.

Refer to rear brake pad replacement (page 17-14).

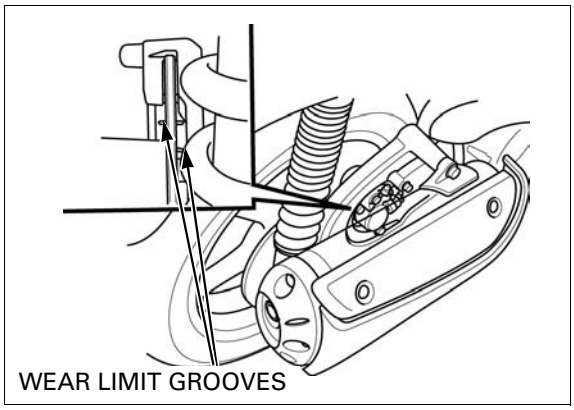

BRAKE SYSTEM

HYDRAULIC SYSTEM INSPECTION

Firmly apply the brake lever, and check that no air has entered the system.
If the lever feels soft or spongy when operated, bleed the air from the system (page 17-7).

Inspect the brake hose and fittings for deterioration, cracks, damage or signs of leakage.
Tighten any loose fittings.
Replace hose and fittings as required.

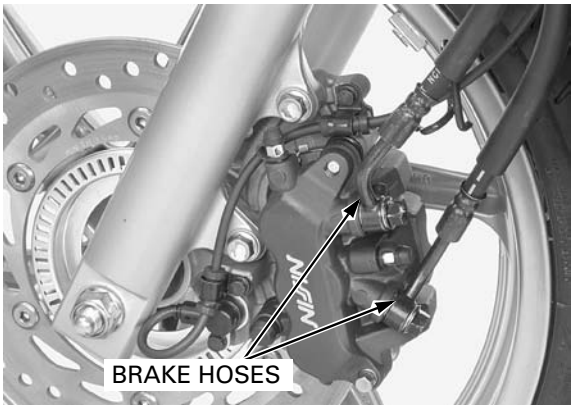

COMBINED BRAKE SYSTEM INSPECTION

This model is equipped with a Combined Brake System.
Check the rear brake operation as follows:
Place the scooter on its centerstand.
Jack up the scooter to raise the front wheel off the ground.

Apply the rear brake lever.

Make sure that the front wheel does not turn while the rear brake lever is applied.

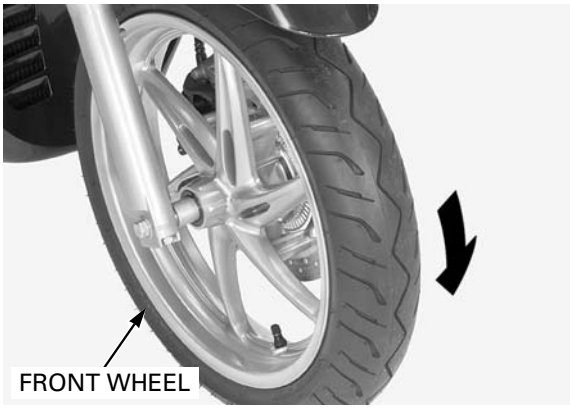

HEADLIGHT AIM

Support the scooter upright on a level surface.

Adjust the headlight beam as specified by local laws and regulations.

Adjust the headlight beam vertically by turning the adjusting screw.

CLUTCH SHOES WEAR

Remove the clutch assembly (page 11-11).

Check the clutch shoe lining for wear or damage.
Measure the thickness of each shoe.

SERVICE LIMIT: 1.0 mm (0.04 in)

Replace the clutch shoe linings if it is below a service limit.

Install the clutch assembly (page 11-16).

SIDESTAND

Support the scooter on its centerstand.

Check the sidestand spring for damage or loss of tension.
Check the sidestand assembly for freedom of movement and lubricate the sidestand pivot if necessary.

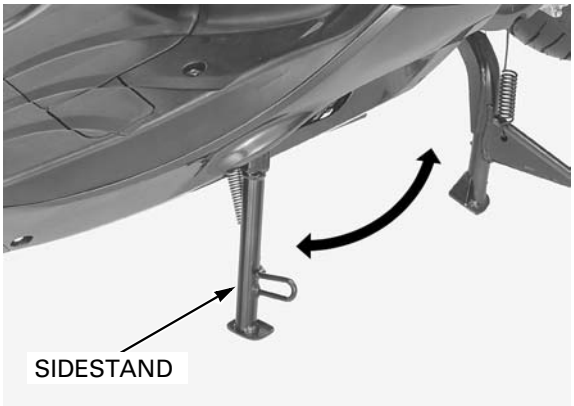

SUSPENSION

FRONT

Check the action of the front suspension by operating the front brake and compressing it several times.
Check the entire assembly for damage or loose fasteners.
Replace damaged components which cannot be repaired.
Tighten all fasteners.

For front fork service (page 15-12).

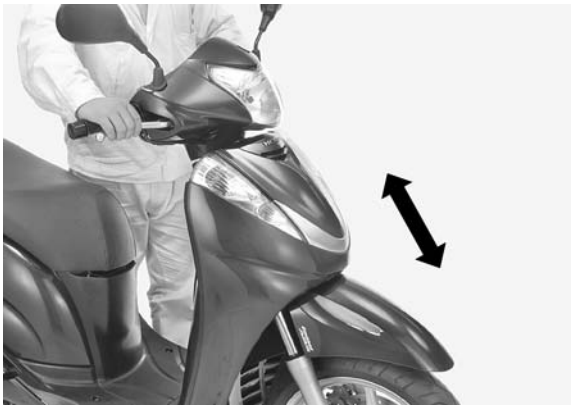

REAR

Check the action of the shock absorber by compressing it several times.
Check the entire shock absorber assembly for damage or loose fasteners.
Replace damaged components which cannot be repaired.
Tighten all fasteners.

For rear shock absorber service (page 16-12).

Raise the rear wheel off the ground by supporting the scooter on its centerstand.

Check for worn engine hanger bushings by grabbing the rear wheel and attempting to move the wheel side to side.

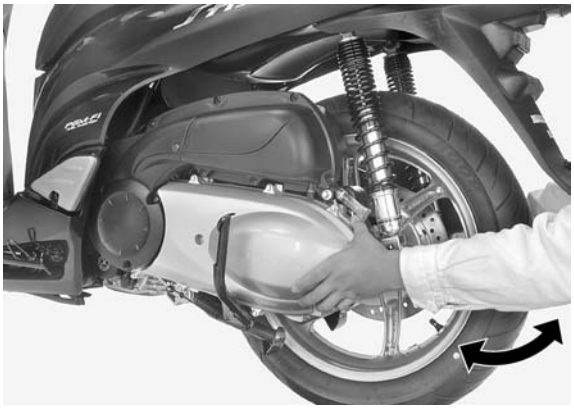

NUTS, BOLTS, FASTENERS

Check that all chassis nuts and bolts are tightened to their correct torque values (page 1-12).

Check that all cotter pins, safety clips, hose clamps and cable stays are in place and properly secured.

WHEELS/TIRES

Support the scooter with its centerstand.

Making sure that the fork is not allowed to move, raise the front wheel and check for play.
Check for worn front wheel bearings by grabbing the front wheel and attempting to move the wheel side to side.
Replace the front wheel bearings if any looseness is noted (page 15-6).

Turn the wheel and check that it rotates smoothly with no unusual noises.

If any abnormal conditions are suspected, inspect the front wheel bearings (page 15-6).

Support the scooter securely and raise the rear wheel.

Check for worn final gear shaft bearings by grabbing the rear wheel and attempting to move the wheel side to side.

Replace the final gear shaft bearings if any looseness is noted (page 12-8).

Turn the wheel and check that it rotates smoothly with no unusual noises.

If any abnormal conditions are suspected, check the final reduction (page 12-6).

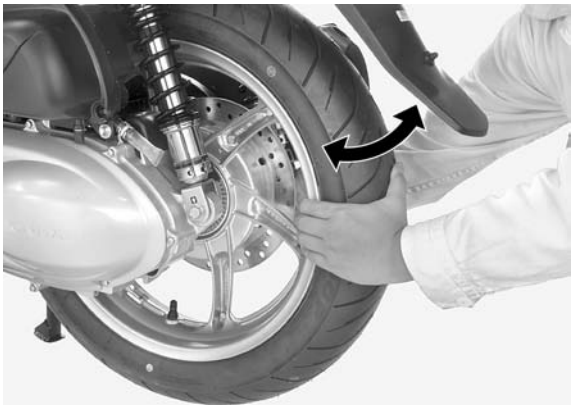

Check the tire pressure with a tire pressure gauge when the tires are cold.

RECOMMENDED TIRE PRESSURE:
- **Driver only:**
  - **Front: 200 kPa (2.00 kgf/cm^2, 28 psi)**
  - **Rear: 225 kPa (2.25 kgf/cm^2, 33 psi)**
- **Driver and passenger:**
  - **Front: 200 kPa (2.00 kgf/cm^2, 28 psi)**
  - **Rear: 225 kPa (2.25 kgf/cm^2, 33 psi)**

Check the tires for cuts, embedded nails, or other damage.
Check the front and rear wheels for trueness.

RECOMMENDED TIRE SIZE:
- **Front: 110/70 – 16 M/C 52P**
- **Rear: 130/70 – 16 M/C 61P**

RECOMMENDED TIRE BRAND:
- **BRIDGESTONE: HOOP B03G (FRONT)**
  HOOP B02G (REAR)

Measure the tread depth at the center of the tires. Replace the tires when the tread depth reaches the following limits.

MINIMUM TIRE TREAD DEPTH:
- **Front: 1.5 mm (0.06 in)**
- **Rear: 2.0 mm (0.08 in)**

STEERING HEAD BEARINGS

Support the scooter with its centerstand and raise the front wheel off the ground.

Check that the handlebar moves freely from side-to-side.
If the handlebar moves unevenly or binds, inspect the steering head bearings (page 15-27).

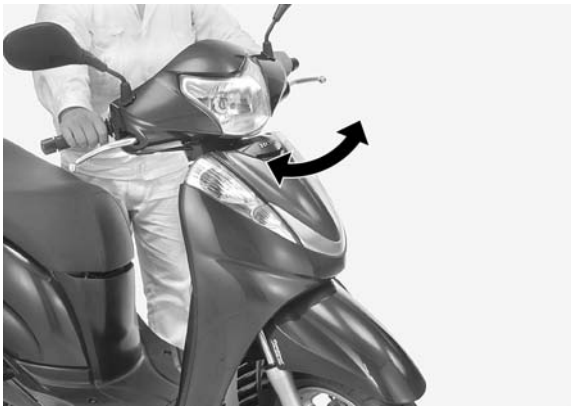

Hold the scooter and check the steering head bearings for wear by moving the fork forward and backward.

If the steering stem has vertical movement, inspect the steering head bearings (page 15-27).

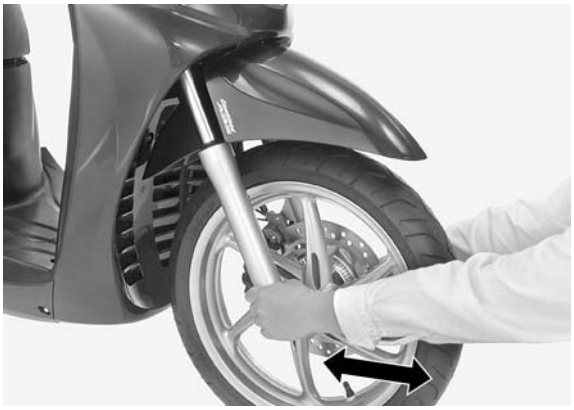

5. LUBRICATION SYSTEM

5

LUBRICATION SYSTEM DIAGRAM 5-2

SERVICE INFORMATION 5-3

TROUBLESHOOTING 5-4

OIL PRESSURE CHECK 5-5

OIL STRAINER 5-6

OIL PRESSURE RELIEF VALVE 5-7

OIL PUMP 5-8

LUBRICATION SYSTEM DIAGRAM

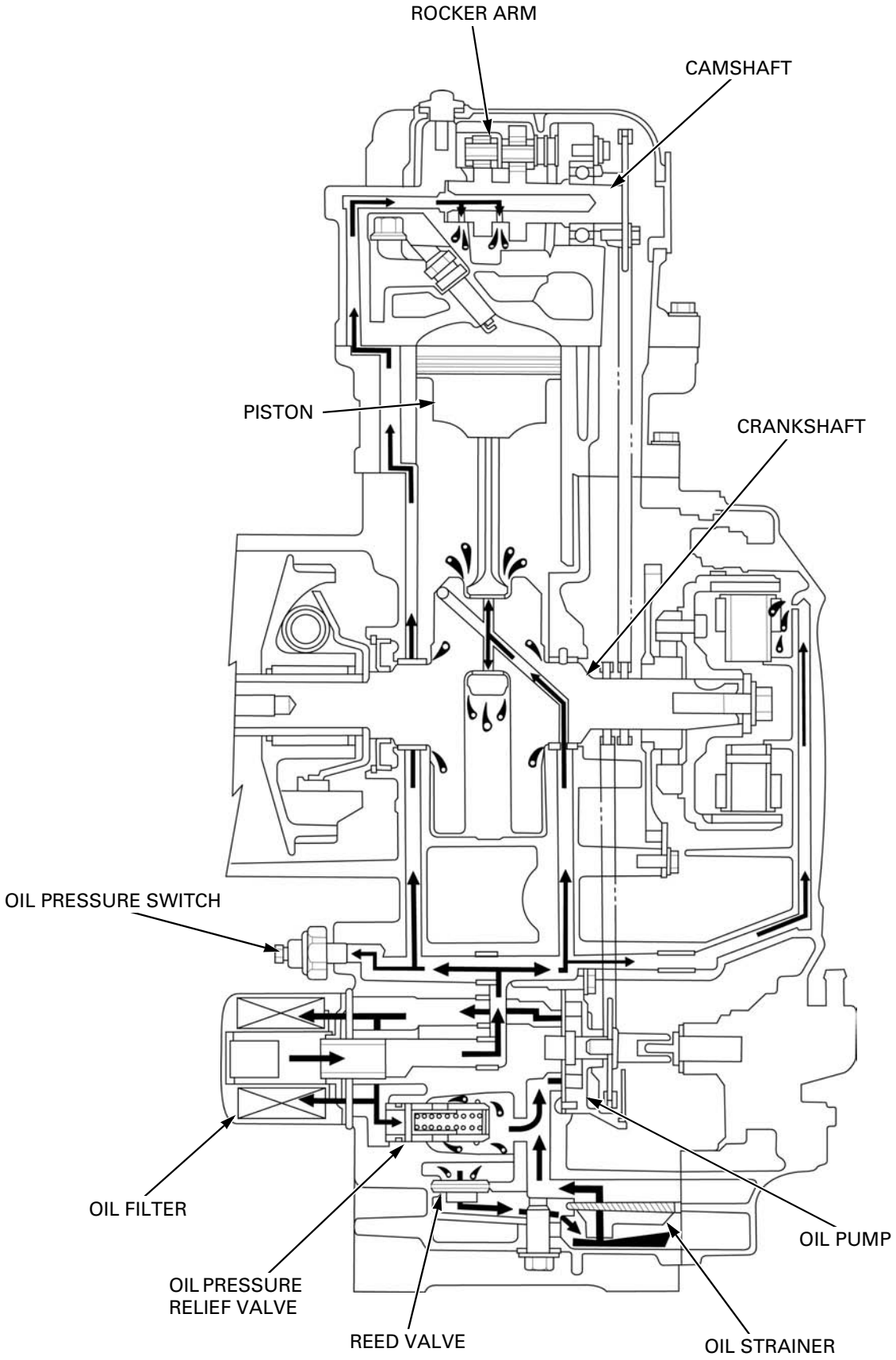

SERVICE INFORMATION

GENERAL

⚠ CAUTION

Used engine oil may cause skin cancer if repeatedly left in contact with the skin for prolonged periods. Although this is unlikely unless you handle used oil on a daily basis, it is still advisable to thoroughly wash your hands with soap and water as soon as possible after handling used oil.

- The oil pump can be serviced with the engine installed in the frame.
- When removing and installing the oil pump, use care not to allow dust or dirt to enter the engine.
- If any portion of the oil pump is worn beyond the specified service limits, replace the oil pump as an assembly.
- For engine oil level check (page 4-10).
- For engine oil and filter change information (page 4-11).
- For oil pressure indicator inspection (page 22-15).

SPECIFICATIONS

Unit: mm (in)

ITEM		STANDARD	SERVICE LIMIT
Engine oil capacity	After draining	1.2 liter (1.3 US qt, 1.1 Imp qt)	–
	After oil filter change	1.4 liter (1.5 US qt, 1.2 Imp qt)	–
	After disassembly	1.7 liter (1.8 US qt, 1.5 Imp qt)	–
Recommended oil		Honda "4-stroke motorcycle oil" or an equivalent API service classification: SG or higher (except oils labeled as energy conserving on the circular API service label) Viscosity: SAE 10W-30 JASO T 903 standard: MB	–
Oil pressure at EOP (engine oil pressure) switch		530 kPa (5.4 kgf/cm^2, 77 psi) at 5,000 min^{-1} (rpm) (80°C/176°F)	–
Oil pump rotor	Tip clearance	0.15 (0.006)	0.20 (0.008)
	Body clearance	0.15 – 0.22 (0.006 – 0.009)	0.35 (0.014)
	Side clearance	0.02 – 0.09 (0.001 – 0.004)	0.12 (0.005)

TORQUE VALUES

Oil pressure switch	12 N·m (1.2 kgf·m, 9 lbf·ft)	Apply sealant to the threads
Oil pump cover screw	2 N·m (0.2 kgf·m, 1.5 lbf·ft)	
Oil pump driven sprocket bolt	12 N·m (1.2 kgf·m, 9 lbf·ft)	Apply engine oil to the threads and flange surface Left-hand threads

TOOLS

Oil pressure gauge set 07506-3000001	Oil pressure gauge attachment 07406-0030000

TROUBLESHOOTING

Engine oil level too low, high oil consumption
- Normal oil consumption
- External oil leak
- Worn piston rings or incorrect piston ring installation (page 10-5)
- Worn cylinder (page 10-5)
- Worn valve guide or stem seal (page 9-12)

Low oil pressure
- Oil level low
- Clogged oil strainer
- Faulty oil pump
- Internal oil leak
- Incorrect oil being used

No oil pressure
- Oil level too low
- Oil pressure relief valve stuck open
- Broken oil pump drive chain
- Broken oil pump drive and driven sprocket
- Damaged oil pump
- Internal oil leak

High oil pressure
- Oil pressure relief valve stuck closed
- Clogged oil gallery or metering orifice
- Incorrect oil being used

Oil contamination
- Oil or filter not changed often enough
- Faulty cylinder head gasket
- Worn piston rings or incorrect piston ring installation (page 10-5)
- Worn valve guide or stem seal (page 9-12)

Oil emulsification
- Blown cylinder head gasket
- Worn or damaged water pump mechanical seal
- Water entry

OIL PRESSURE CHECK

Remove the right floor side cover (page 3-8).

If the engine is cold, the pressure reading will be abnormally high. Warm up the engine to normal operating temperature before starting this test.
Stop the engine.

Slide the rubber cap off and disconnect the oil pressure switch wire by removing the terminal screw.

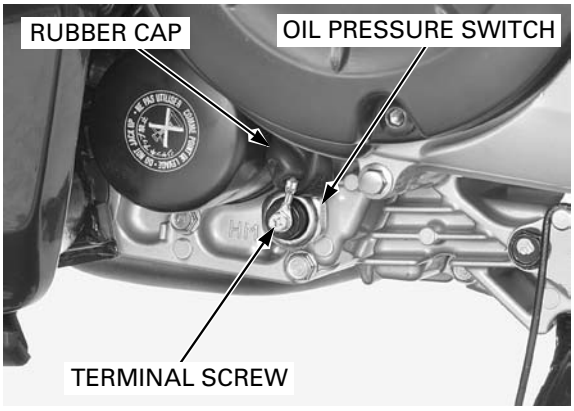

Remove the oil pressure switch and connect an oil pressure gauge attachment and gauge to the pressure switch hole.

TOOLS:

Oil pressure gauge set	**07506-3000001**
Oil pressure gauge attachment	**07406-0030000**
or equivalent commercially available	

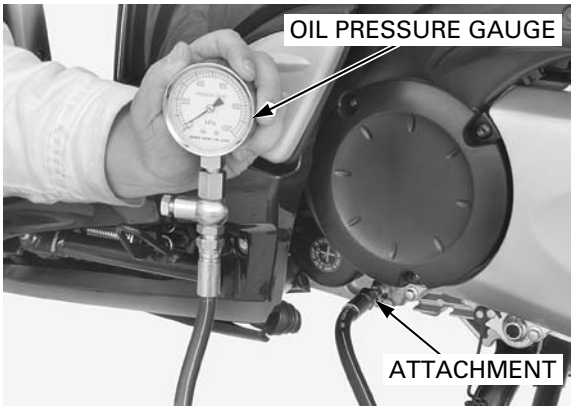

Check the oil level and add the recommended oil if necessary (page 4-10).

Start the engine and check the oil pressure at 5,000 min^{-1} (rpm).

OIL PRESSURE:
530 kPa (5.4 kgf/cm^2, 77 psi) at 5,000 min^{-1} (rpm) (80°C/176°F)

Stop the engine.

Do not apply sealant to the thread head 3 – 4 mm (0.1 – 0.2 in).

Apply sealant (Three Bond 1207B or equivalent) to the oil pressure switch threads as shown and tighten it to the specified torque.

TORQUE: 12 N·m (1.2 kgf·m, 9 lbf·ft)

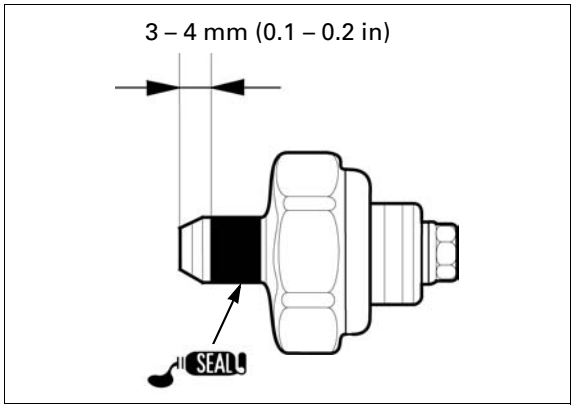

Connect the oil pressure switch wire and tighten the terminal screw.

Install the rubber cap.

Start the engine.
Check that the oil pressure indicator turns off after 1 or 2 seconds. If the oil pressure indicator stays on, stop the engine immediately and determine the cause (page 22-15).

OIL STRAINER

REMOVAL

Drain the engine oil (page 4-11).
Remove the right crankcase cover (page 13-4).

Remove the oil strainer and screen mesh.

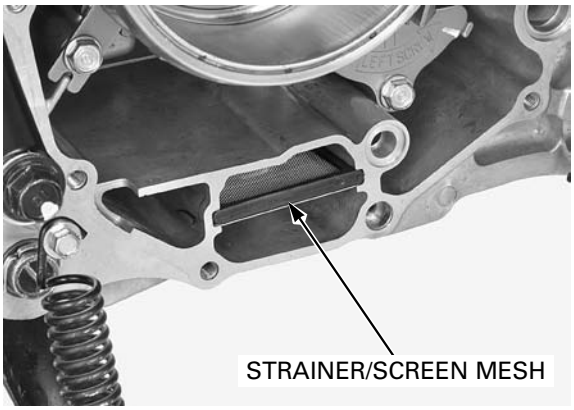

INSPECTION

Check the oil strainer screen mesh for damage or clogs.

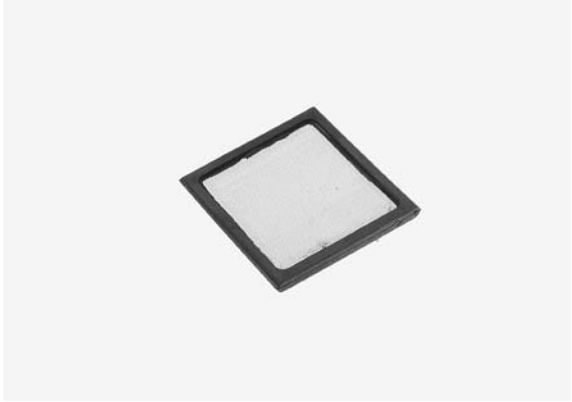

INSTALLATION

Install the oil strainer into the crankcase as shown.

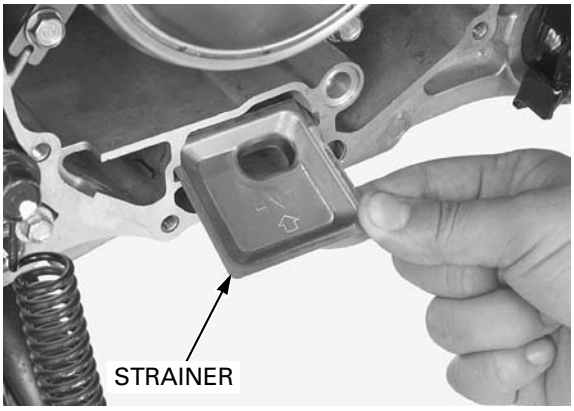

Install the screen mesh into the crankcase as shown.

Install the right crankcase cover (page 13-5).

Fill the engine with the recommended oil (page 4-10).

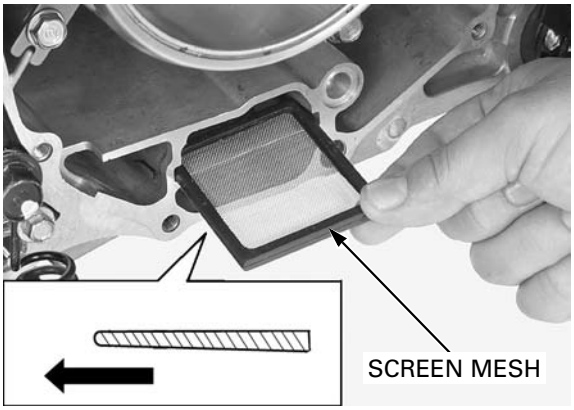

OIL PRESSURE RELIEF VALVE

REMOVAL

Separate the crankcase (page 14-5).

Remove the oil pressure relief valve and O-ring from the left crankcase.

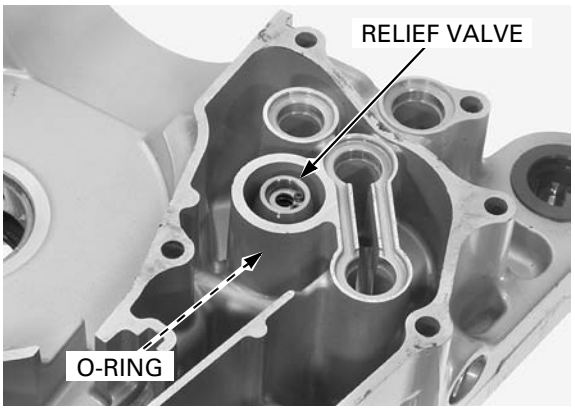

INSPECTION

- Be careful not to loose the disassemble parts.

Check the operation of the oil pressure relief valve by pushing on the piston.

The snap ring is under spring pressure. Use care when removing it and wear eye and face protection.

Remove the snap ring, washer, spring and piston from the oil pressure relief valve body.

Check the piston for wear, sticking or damage.
Check the valve spring for wear or damage.
Check the relief valve body for clogging or damage.

Clean all parts and assemble the relief valve in the reverse order of disassembly.

- Install the snap ring with the chamfered edge facing the thrust load side.
- Do not reuse worn snap ring which could easily spin in the groove.
- Check that the snap ring is seated in the groove.

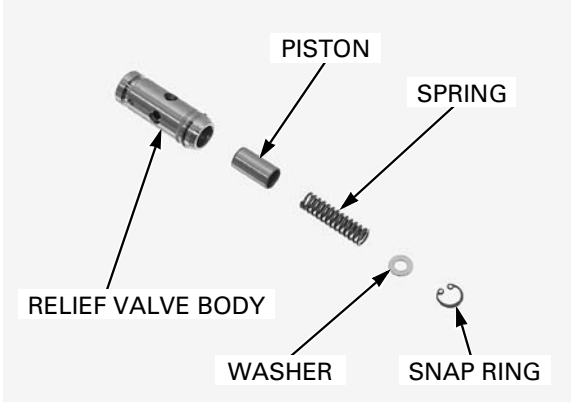

INSTALLATION

Coat a new O-ring with engine oil and install it to the oil pressure relief valve.

Install the oil pressure relief valve into the left crankcase.

Assemble the crankcase (page 14-14).

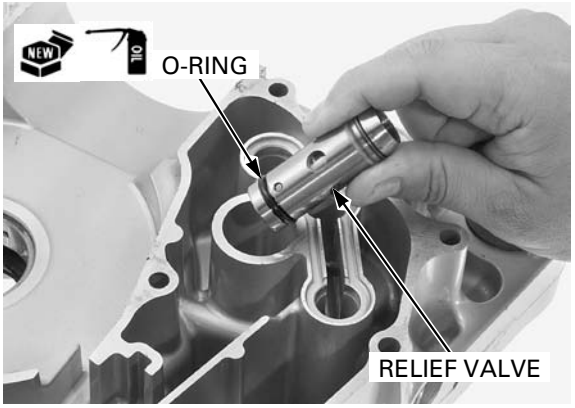

OIL PUMP

REMOVAL

Remove the flywheel (page 13-9).

Remove the following:

– bolt and sprocket cover

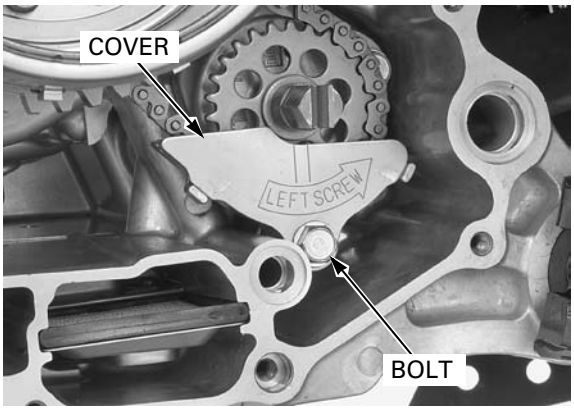

The oil pump driven sprocket bolt has left-hand threads.

– oil pump driven sprocket bolt

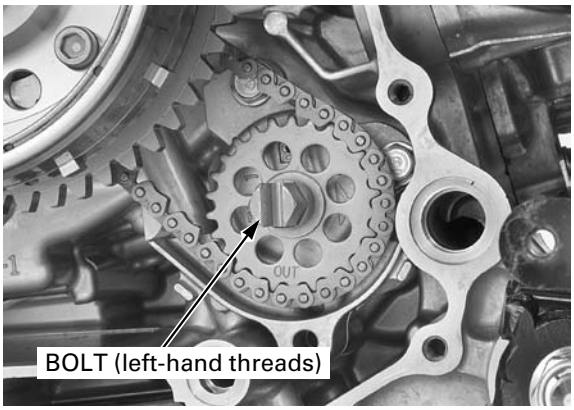

– driven sprocket
– drive chain

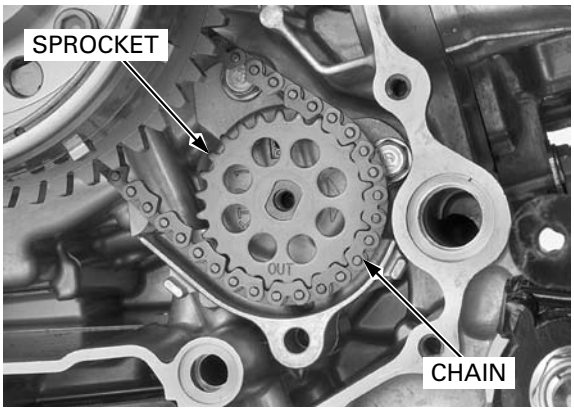

– two bolts
– oil pump

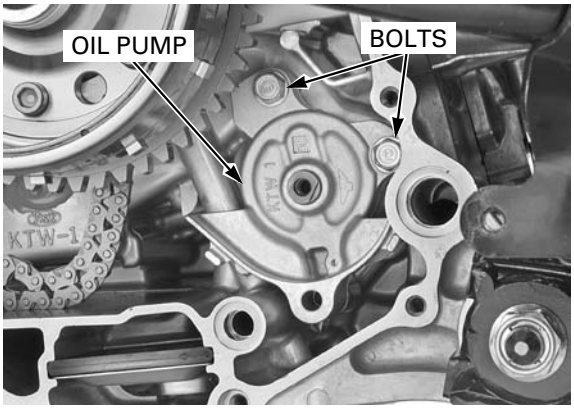

DISASSEMBLY

Remove the following:

- dowel pins
- screw
- pump cover

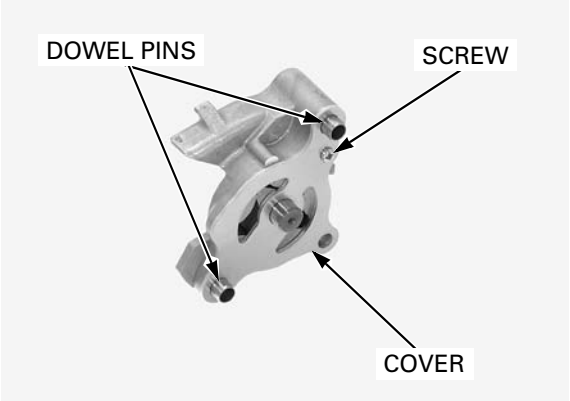

- oil pump shaft
- thrust washer
- drive pin

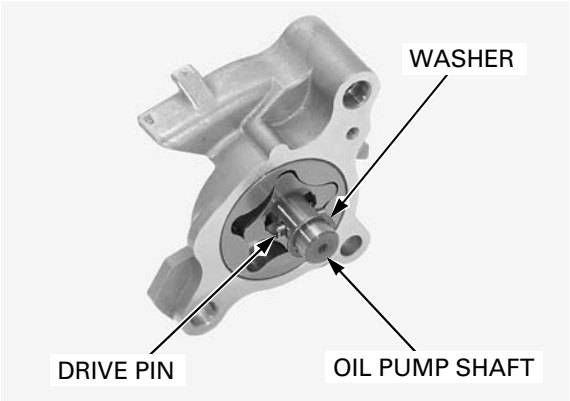

- inner rotor
- outer rotor

Wash all parts with a high flash point or non-flammable solvent.

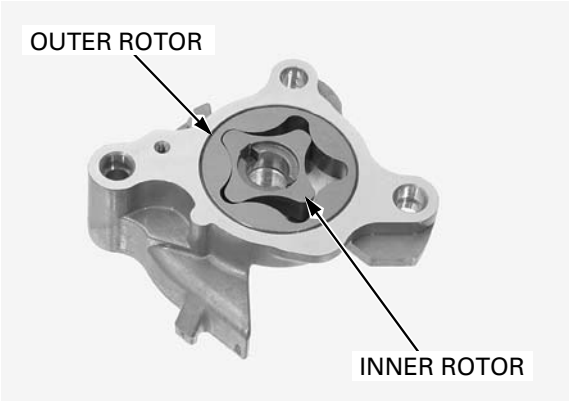

INSPECTION

- Measure at several points and use the largest reading to compare the service limit.
- If any portion of the oil pump is worn beyond the specified service limits, replace the oil pump as an assembly.

Temporarily install the outer rotor, inner rotor, drive pin and oil pump shaft into the oil pump body.

Measure the tip clearance.

SERVICE LIMIT: 0.20 mm (0.008 in)

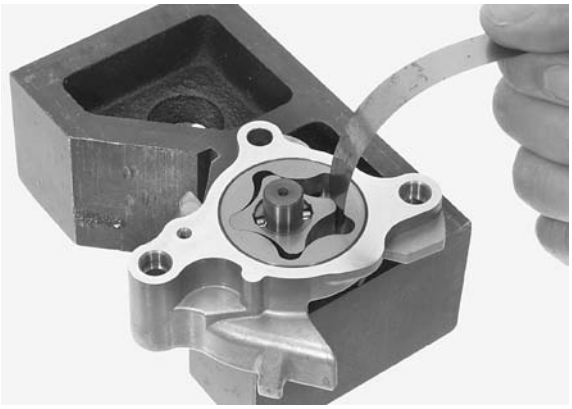

Measure the body clearance.

SERVICE LIMIT: 0.35 mm (0.014 in)

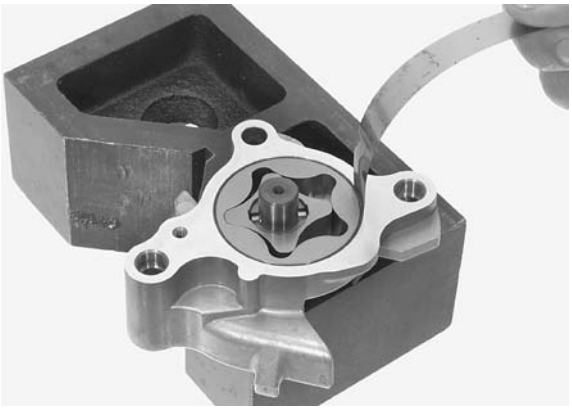

Measure the side clearance.

SERVICE LIMIT: 0.12 mm (0.005 in)

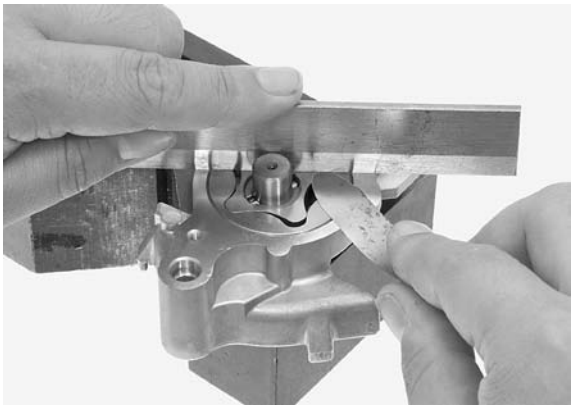

ASSEMBLY

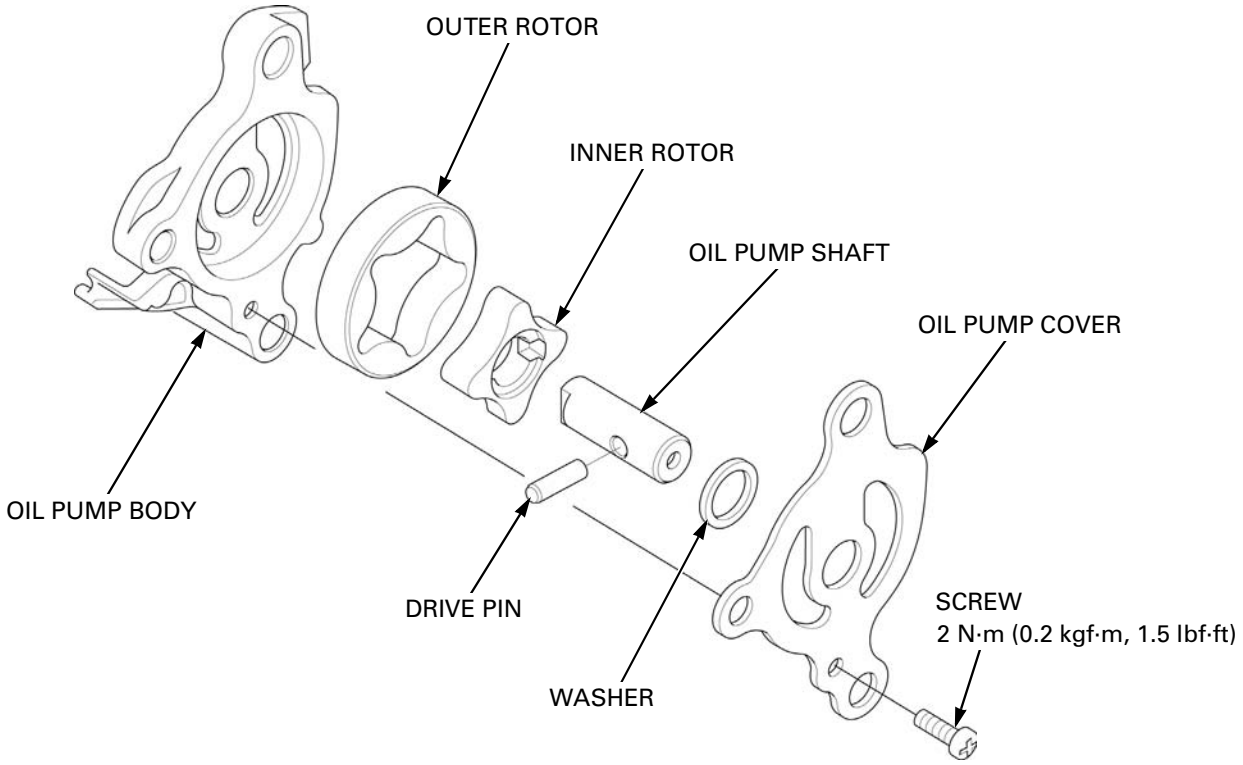

Apply engine oil to the inner and outer rotor.

Install the outer rotor into the oil pump body.
Install the inner rotor into the outer rotor with its drive pin groove facing the oil pump cover.

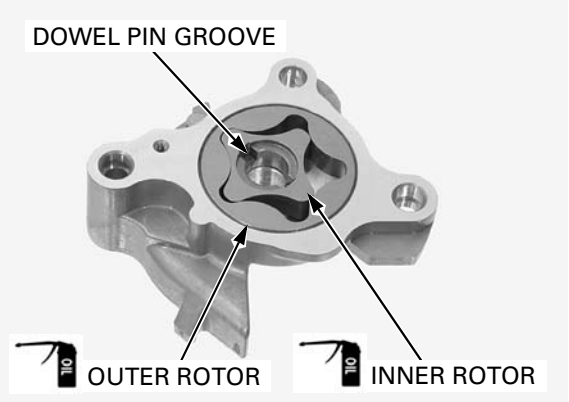

Apply engine oil to the oil pump shaft and insert the drive pin into the hole in the oil pump shaft.

Install the oil pump shaft through the inner rotor and oil pump body by align the drive pin with the groove in the inner rotor.
Install the thrust washer.

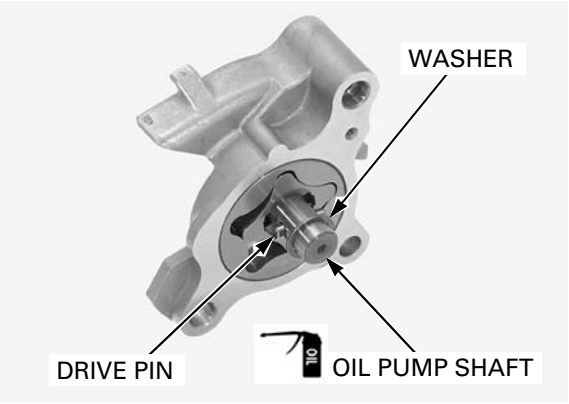

Install the oil pump cover onto the oil pump body by aligning the dowel pins on the body and hole of the cover.

Install and tighten the oil pump cover screw to the specified torque.

TORQUE: 2 N·m (0.2 kgf·m, 1.5 lbf·ft)

Check that the oil pump shaft turns smoothly.

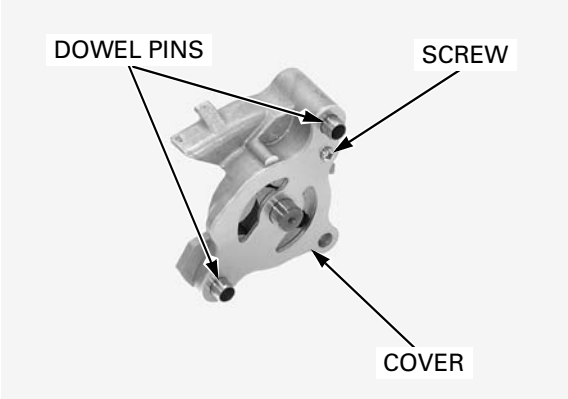

INSTALLATION

Install the oil pump onto the crankcase by aligning the dowel pins with the bolt holes and tighten the two mounting bolts.

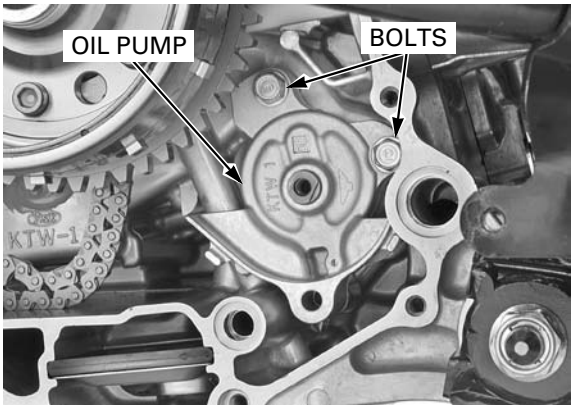

Apply engine oil to the drive chain and the driven sprocket teeth.

Set the drive chain over the driven sprocket, and install the sprocket with its "OUT" mark facing out while aligning the flat surfaces of the sprocket and pump shaft.

Apply engine oil to the threads of the oil pump driven sprocket bolt.

The oil pump driven sprocket bolt has left-hand threads.

Install and tighten the oil pump driven sprocket bolt to the specified torque.

TORQUE: 12 N·m (1.2 kgf·m, 9 lbf·ft)

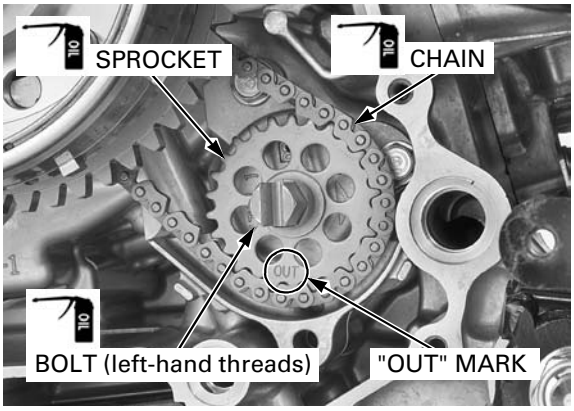

Install the sprocket cover and tighten the bolt.

Install the flywheel (page 13-12).

After installation, fill the crankcase with the recommended oil (page 4-10) and check that there is no oil leaks.

Check the oil pressure (page 5-5).

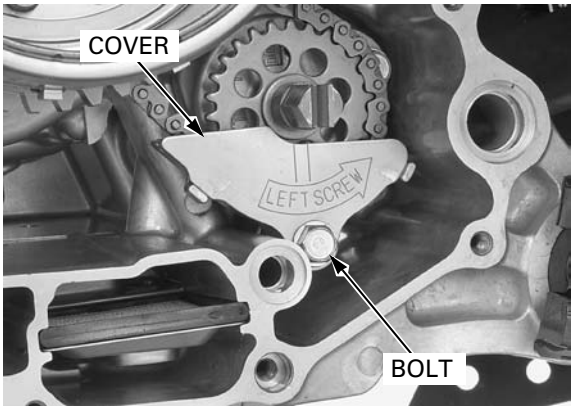

6. FUEL SYSTEM (PGM-FI)

6

COMPONENT LOCATION 6-2

SERVICE INFORMATION 6-3

PGM-FI SYMPTOM TROUBLESHOOTING 6-5

PGM-FI SYSTEM LOCATION 6-6

PGM-FI SYSTEM DIAGRAM 6-7

PGM-FI CONNECTOR LOCATIONS 6-8

PGM-FI TROUBLESHOOTING INFORMATION 6-10

DTC INDEX 6-15

DTC TROUBLESHOOTING 6-16

MIL TROUBLESHOOTING 6-31

MIL CIRCUIT INSPECTION 6-43

FUEL LINE INSPECTION 6-44

FUEL PUMP 6-48

FUEL TANK 6-51

AIR CLEANER HOUSING 6-52

THROTTLE BODY 6-53

INJECTOR 6-61

INTAKE PIPE 6-64

ECM 6-65

ENGINE STOP RELAY 6-67

FUEL PUMP RELAY 6-69

BANK ANGLE SENSOR 6-72

ECT SENSOR 6-74

O_2 SENSOR 6-76

ENGINE IDLE SPEED 6-77

IACV 6-77

SECONDARY AIR SUPPLY SYSTEM 6-78

COMPONENT LOCATION

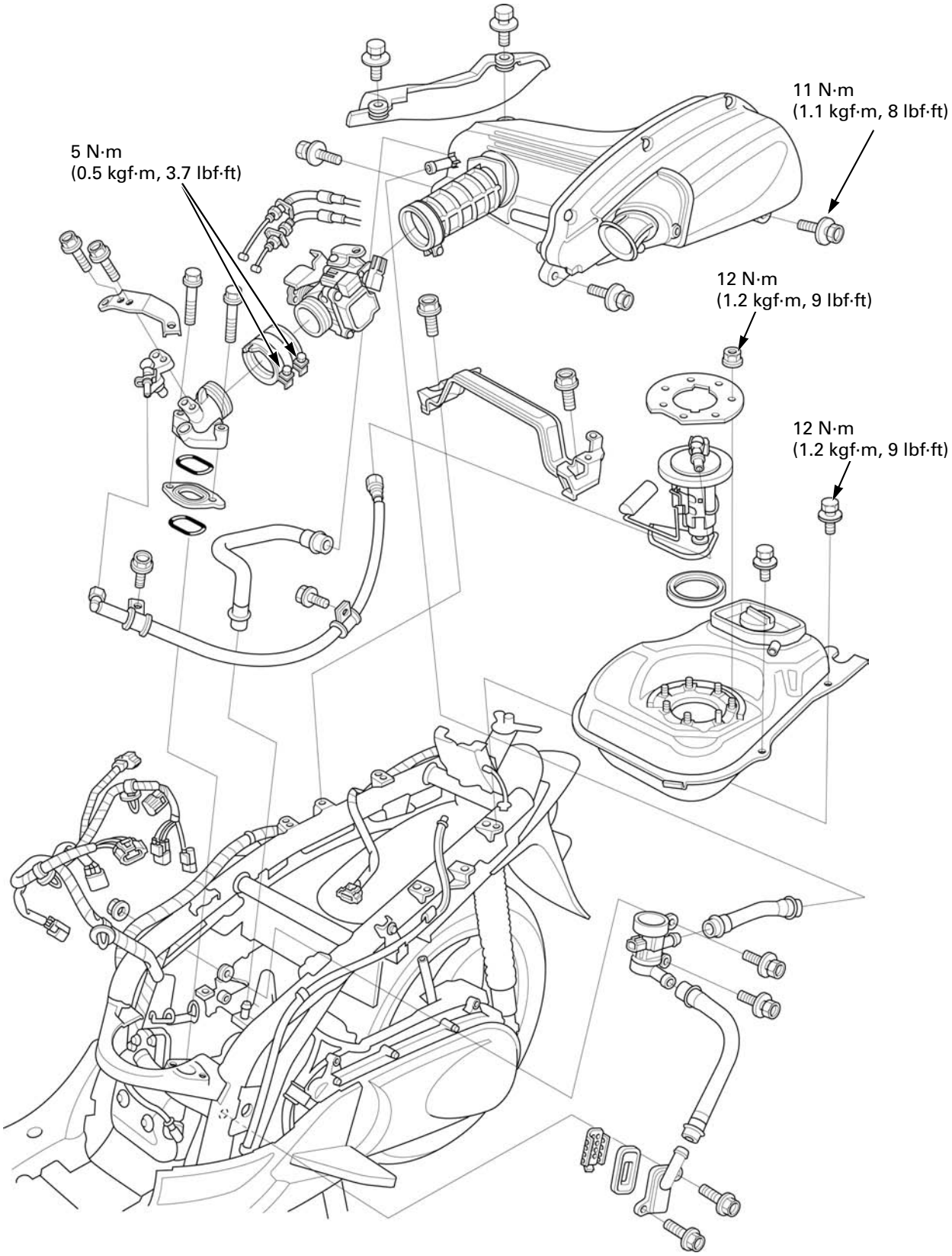

SERVICE INFORMATION

GENERAL

- Work in a well ventilated area. Smoking or allowing flames or sparks in the work area or where gasoline is stored can cause a fire or explosion.
- Before disconnecting the fuel feed hose, relieve fuel pressure from the system by starting the engine with the fuel pump connector disconnected (page 6-44).
- Bending or twisting the control cables will impair smooth operation and could cause the cables to stick or bind, resulting in loss of vehicle control.
- Do not apply commercially available carburetor cleaners to the inside of the throttle bore.
- Do not snap the throttle valve from full open to full close after the throttle cable has been removed. It may cause incorrect idle operation.
- Seal the intake manifold ports with tape or a clean cloth to keep dirt and debris from entering the engine after the throttle body has been removed.
- Do not damage the throttle body. It may cause incorrect throttle valve operation.
- Prevent dirt and debris from entering the throttle bore and air passages after the throttle body has been removed. Clean them using compressed air if necessary.
- The throttle body is factory pre-set. Do not disassemble in a way other than shown in this manual.
- Do not loosen or tighten the white painted nut of the throttle body. Loosening or tightening it can cause incorrect throttle valve operation.
- Always replace the packing when the fuel pump is removed.
- A faulty PGM-FI system is often related to poorly connected or corroded connectors. Check those connections before proceeding.
- When disassembling the fuel system parts, note the location of the O-rings. Replace them with new ones upon reassembly.
- Use a digital tester for PGM-FI system inspection.
- Refer to the fuel level sensor inspection (page 22-13).

SPECIFICATIONS

ITEM	SPECIFICATIONS
Throttle body identification number	GQB4A
Engine idle speed	1,500 ± 100 min^{-1} (rpm)
Throttle grip free play	2 – 6 mm (0.1 – 0.2 in)
Fuel injector resistance (at 20°C /68°F)	11 – 13 Ω
PAIR control solenoid valve resistance (at 20°C/68°F)	20 – 24 Ω
Fuel pressure at idle	294 kPa (3.0 kgf/cm^2, 43 psi)
Fuel pump flow (at 12 V)	33.3 cm^3 (1.1 US oz, 1.2 Imp oz) minimum/10 seconds

TORQUE VALUES

Throttle body insulator band screw	5 N·m (0.5 kgf·m, 3.7 lbf·ft)	
IACV set plate torx screw	2.1 N·m (0.2 kgf·m, 1.5 lbf·ft)	
Sensor unit mounting torx screw	3.4 N·m (0.3 kgf·m, 2.5 lbf·ft)	
Throttle body cable bracket screw	3.4 N·m (0.3 kgf·m, 2.5 lbf·ft)	
Throttle body wire clamp plate screw	3.4 N·m (0.3 kgf·m, 2.5 lbf·ft)	
ECT sensor	25 N·m (2.5 kgf·m, 18 lbf·ft)	
O_2 sensor	25 N·m (2.5 kgf·m, 18 lbf·ft)	
Fuel pump setting plate nut	12 N·m (1.2 kgf·m, 9 lbf·ft)	See page 6-50
Fuel tank mounting washer bolt	12 N·m (1.2 kgf·m, 9 lbf·ft)	
Air cleaner housing mounting washer bolt	11 N·m (1.1 kgf·m, 8 lbf·ft)	
Bank angle sensor mounting screw	1.2 N·m (0.1 kgf·m, 0.9 lbf·ft)	

TOOLS

Fuel pressure gauge 07406-0040004 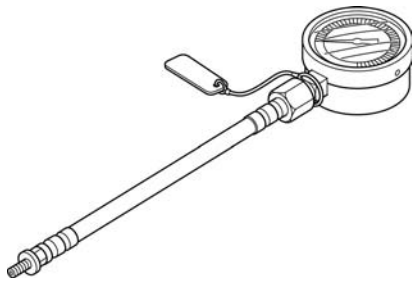	Pressure gauge manifold 07ZAJ-S5A0111 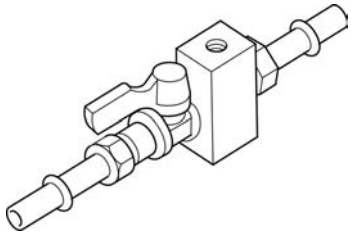	Fuel attachment hose 07ZAJ-S5A0120 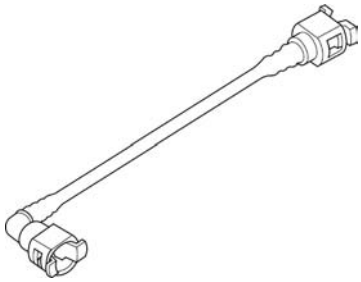
ECM test harness 33P 070MZ-MCA0100 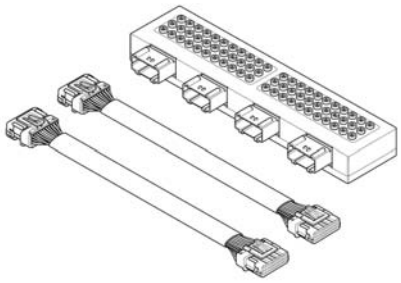	SCS connector 070PZ-ZY30100 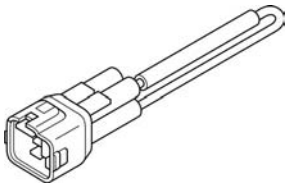	Test probe 07ZAJ-RDJA110 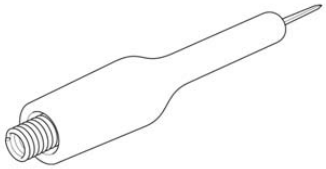

PGM-FI SYMPTOM TROUBLESHOOTING

When the scooter has one of these symptoms, check the DTC or MIL blinking, refer to the DTC index (page 6-15) and begin the appropriate troubleshooting procedure. If there are no DTC/MIL blinking stored in the ECM memory, do the diagnostic procedure for the symptom, in sequence listed below, until you find cause.

Symptom	Diagnosis procedure	Also check for
Engine cranks but won't start (No fuel pump operation sound when the turning the ignition switch "ON")	1. ECM power/ground circuits malfunction (page 6-65) 2. Inspect the fuel pump (page 6-48)	• Faulty bank angle sensor or related circuit • Faulty engine stop relay or related circuit • Faulty sensor unit or related circuit • Faulty ECM
Engine cranks but won't start (No DTC and MIL blinking)	1. Crank the starter for more than ten seconds and check the DTC (page 6-15) and execute the troubleshooting according to the DTC. 2. Inspect the IACV (page 6-77). 3. Inspect the ignition system (page 20-5).	• No fuel to injector – Clogged fuel filter – Pinched or clogged fuel feed hose – Pinched or clogged fuel tank breather hose – Faulty fuel pump • Intake air leak • Contaminated/deteriorated fuel • Faulty fuel injector
Engine stalls, hard to start, rough idling	1. Inspect the idle speed (page 6-77) 2. Inspect the IACV (page 6-77) 3. Inspect the fuel supply system (page 6-44). 4. Inspect the ignition system (page 20-5).	• Restricted fuel feed hose • Contaminated/deteriorated fuel • Intake air leak • Restricted fuel tank breather tube
Afterburn when engine braking is used	1. Inspect the PAIR system (page 6-78). 2. Inspect the ignition system (page 20-5).	
Backfiring or misfiring during acceleration	Inspect the ignition system (page 20-5)	
Poor performance (drive-ability) and poor fuel economy	1. Inspect the fuel supply system (page 6-44) 2. Inspect the ignition system (page 20-5).	• Pinched or clogged fuel feed hose • Faulty pressure regulator in the fuel pump • Faulty injector
Idle speed is below specifications or fast idle too low (No DTC and MIL blinking)	1. Inspect the idle speed (page 6-77) 2. Inspect the IACV (page 6-77) 3. Inspect the fuel supply system (page 6-44) 4. Inspect the ignition system (page 20-5)	
Idle speed is above specifications or fast idle too high (No DTC and MIL blinking)	1. Inspect the idle speed (page 6-77) 2. Inspect the throttle operation and grip free play 3. Inspect the IACV (page 6-77)	• Intake air leak • Engine top end problem • Air cleaner condition
MIL never comes ON at all	Inspect the MIL circuit (page 6-43).	
MIL stays ON at all (No DTC set)	1. Inspect the MIL circuit (page 6-43) 2. Inspect the DLC circuit (page 6-43)	

PGM-FI SYSTEM LOCATION

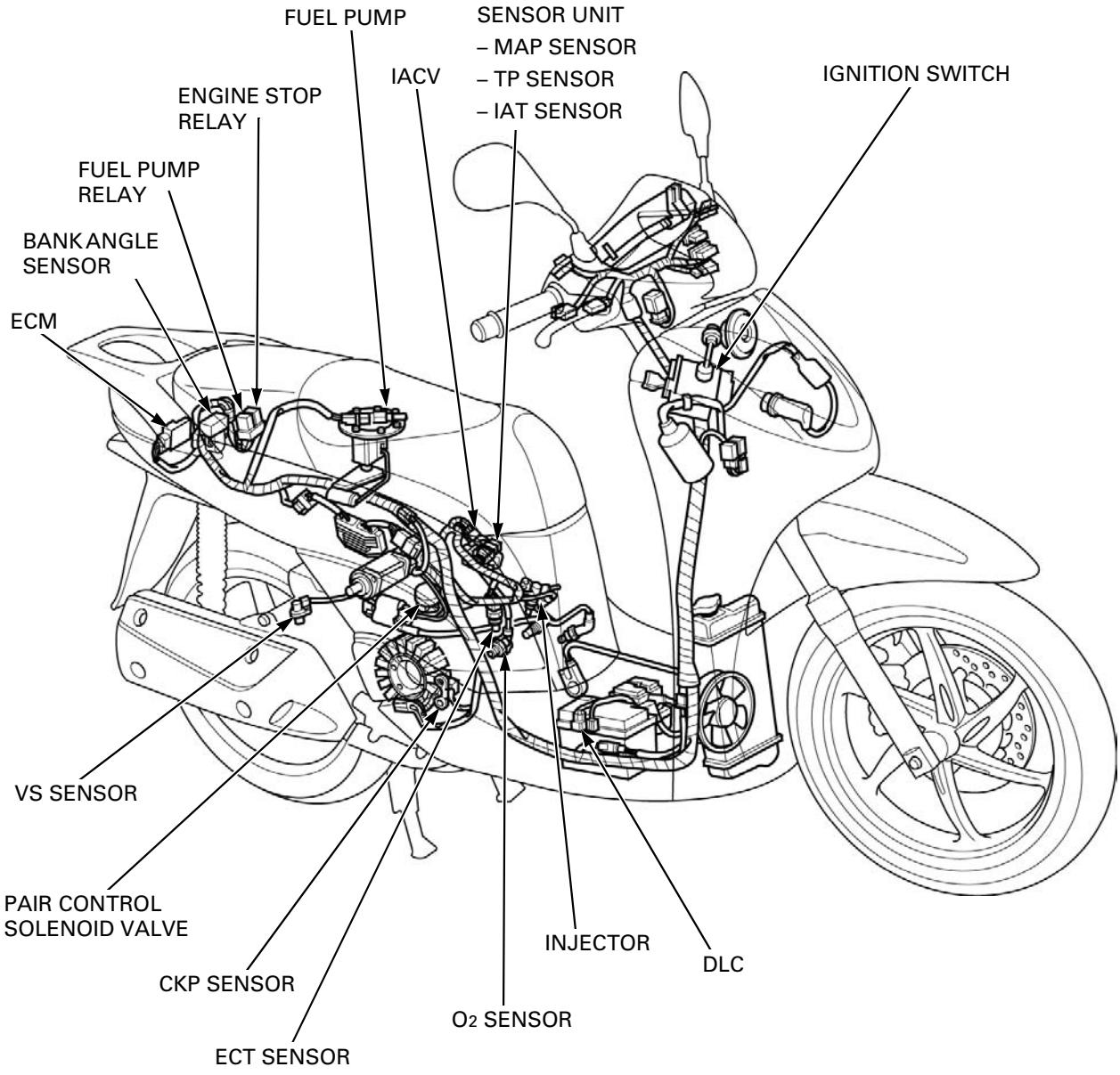

PGM-FI SYSTEM DIAGRAM

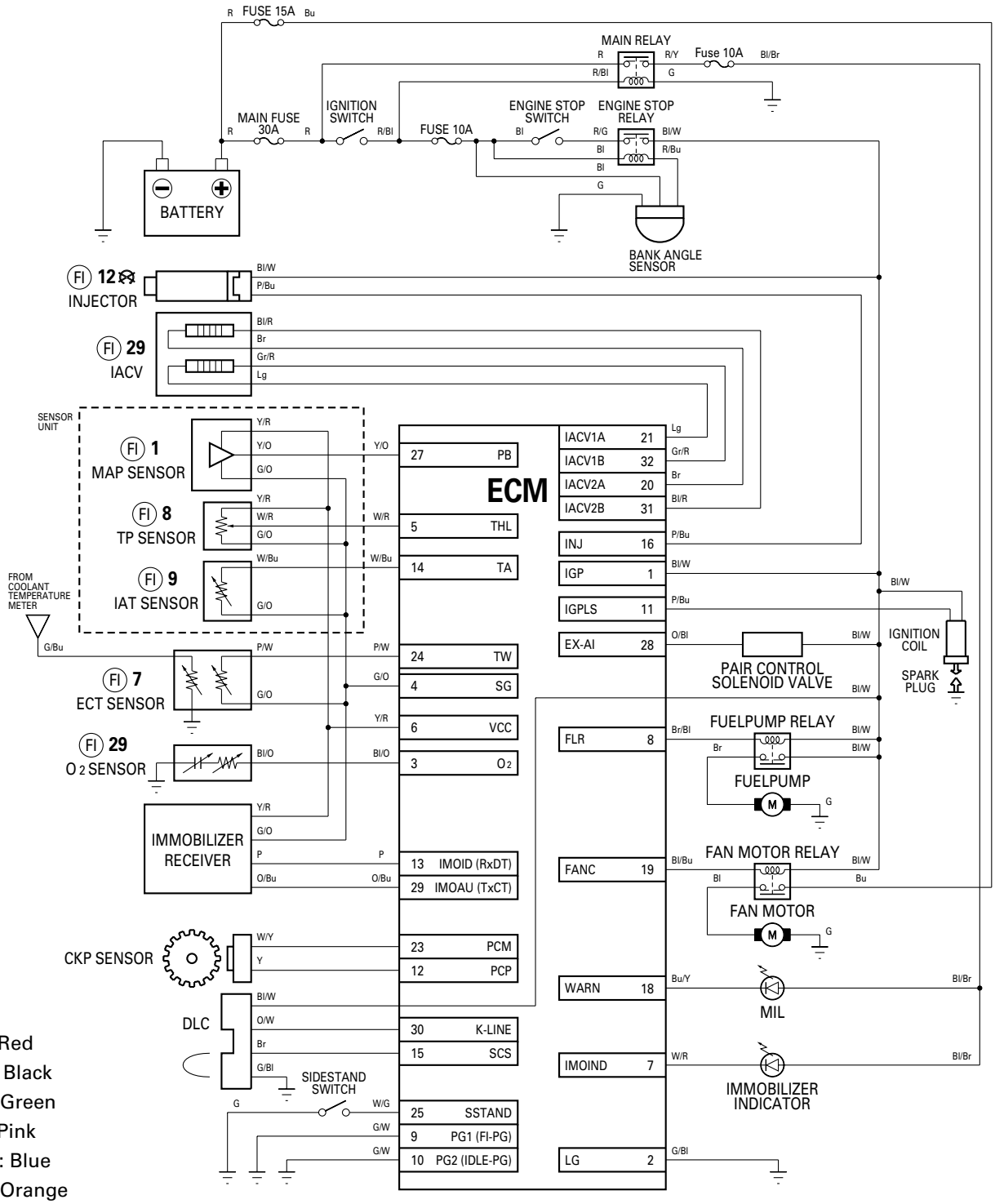

R: Red
Bl: Black
G: Green
P: Pink
Bu: Blue
O: Orange
W: White
Br: Brown
Y: Yellow
Gr: Gray
Lg: Light green

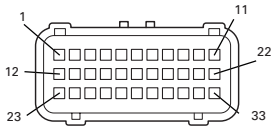

ECM 33P CONNECTOR
ECM side of male terminal

PGM-FI CONNECTOR LOCATIONS

NOTE 1: Remove the luggage box (page 3-5).

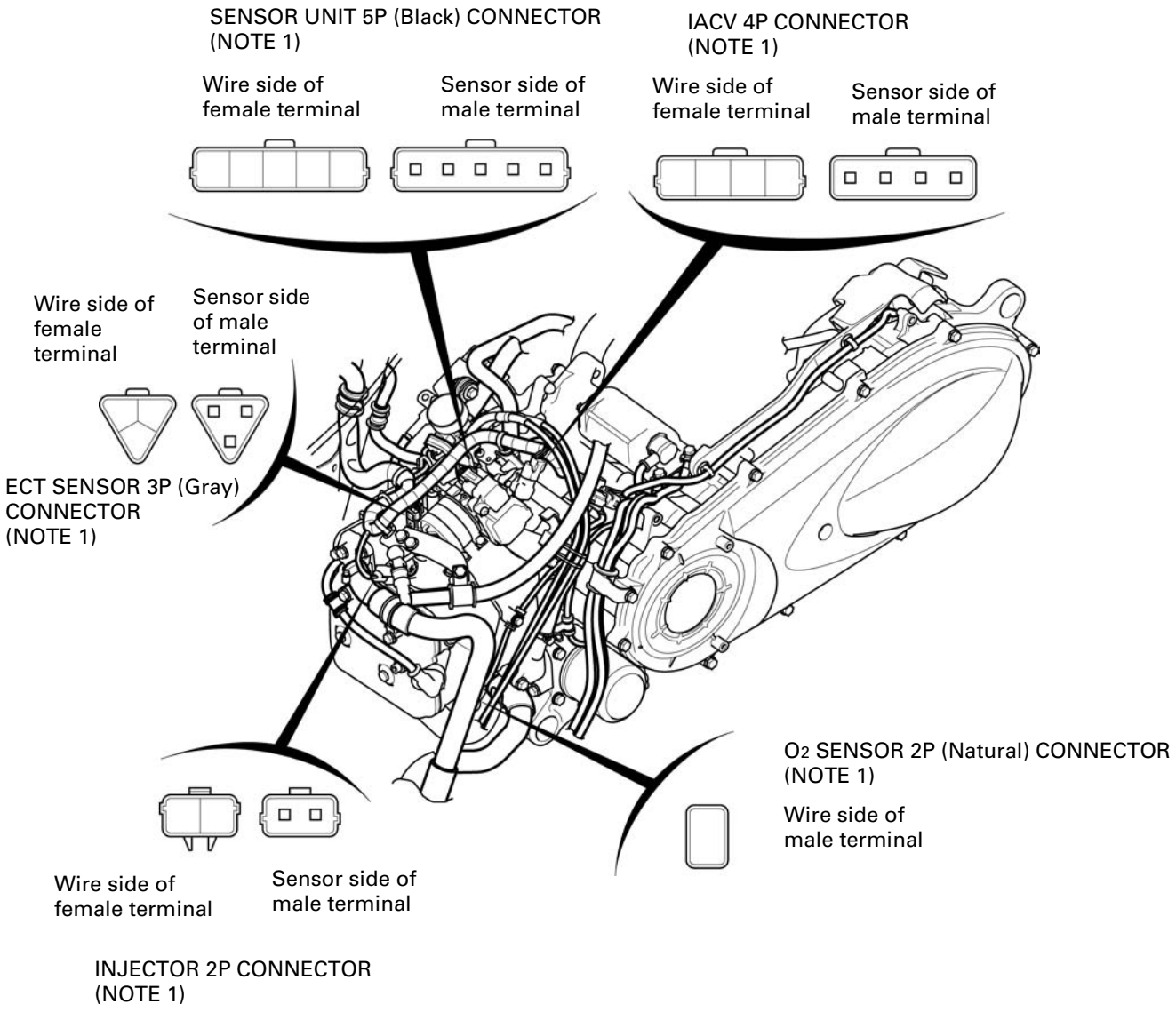

NOTE 2: Remove the maintenance lid (page 3-4).

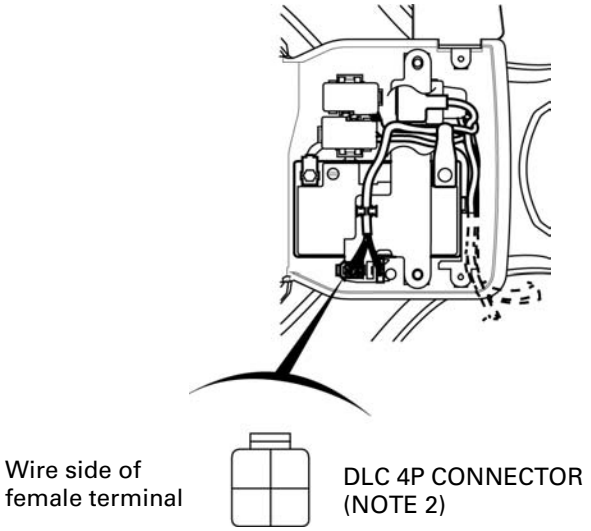

NOTE 3: Remove the rear fender A (page 3-7).

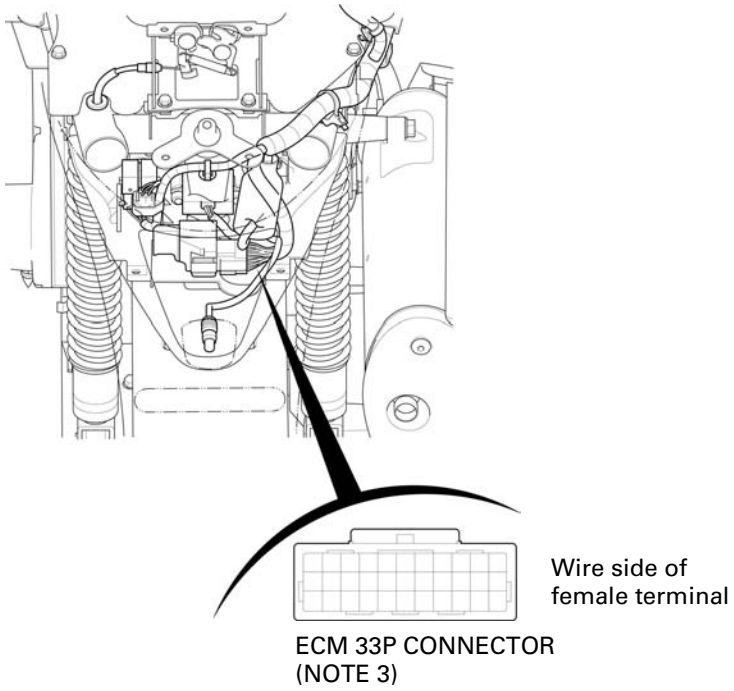

PGM-FI TROUBLESHOOTING INFORMATION

GENERAL TROUBLESHOOTING

Intermittent Failure

The term "intermittent failure" means a system may have had a failure, but it checks OK now. If the MIL does not come on, check for poor contact or loose pins at all connectors related to the circuit that of the troubleshooting. If the MIL was on, but then went out, the original problem may be intermittent.

Opens and Shorts

"Opens" and "Shorts" are common electrical terms. An open is a break in a wire or at a connection. A short is an accidental connection of a wire to ground or to another wire. In simple electronics, this usually means something will not work at all. With ECMs this can sometimes mean something works, but not the way it's supposed to.

If the MIL has come on

Refer to DTC READOUT (page 6-12).

If the MIL did not stay on

If the MIL did not stay on, but there is a driveability problem, do the SYMPTOM TROUBLESHOOTING (page 6-5).

SYSTEM DESCRIPTION

SELF-DIAGNOSIS SYSTEM

The PGM-FI system is equipped with the self-diagnostic system. When any abnormality occurs in the system, the ECM turns on the MIL and stores a DTC in its erasable memory.

FAIL-SAFE FUNCTION

The PGM-FI system is provided with a fail-safe function to secure a minimum running capability even when there is trouble in the system. When any abnormality is detected by the self-diagnosis function, running capability is maintained by pre-programed value in the simulated program map. When any abnormality is detected in the injector and/or crankshaft position (CKP) sensor and/or short of the sensor unit power line, the fail-safe function stops the engine to protect it from damage.

DTC (Diagnostic Trouble Code)

- The DTC is composed of a main code and a sub code and it is displayed as a hyphenated number when retrieved from the ECM with the HDS pocket tester.
  The digits in front of the hyphen are the main code, they indicate the component of function failure.
  The digits behind the hyphen are the sub code, they detail the specific symptom of the component or function failure.
  For example, in the case of the TP sensor:
  – DTC 08 – 1 = (TP sensor voltage) – (lower than the specified value)
  – DTC 08 – 2 = (TP sensor voltage) – (higher than the specified value).
- The MAP, ECT, TP and IAT sensor diagnosis will be made according to the voltage output of the affected sensor.
  If a failure occurs, the ECM determines the Function Failure, compares the sensor voltage output to the standard value, and then outputs the corresponding DTC to the HDS Pocket Tester.
  For example:
  – If the input voltage line (A) on the MAP sensor is opened, the ECM detects the output voltage is about 5 V, then the DTC 1-2 (MAP sensor circuit high voltage) will be displayed.
  – If the input voltage line (B) on the TP sensor is opened, the ECM detects the output voltage is 0 V, then the DTC 8-1 (TP sensor circuit low voltage) will be displayed.

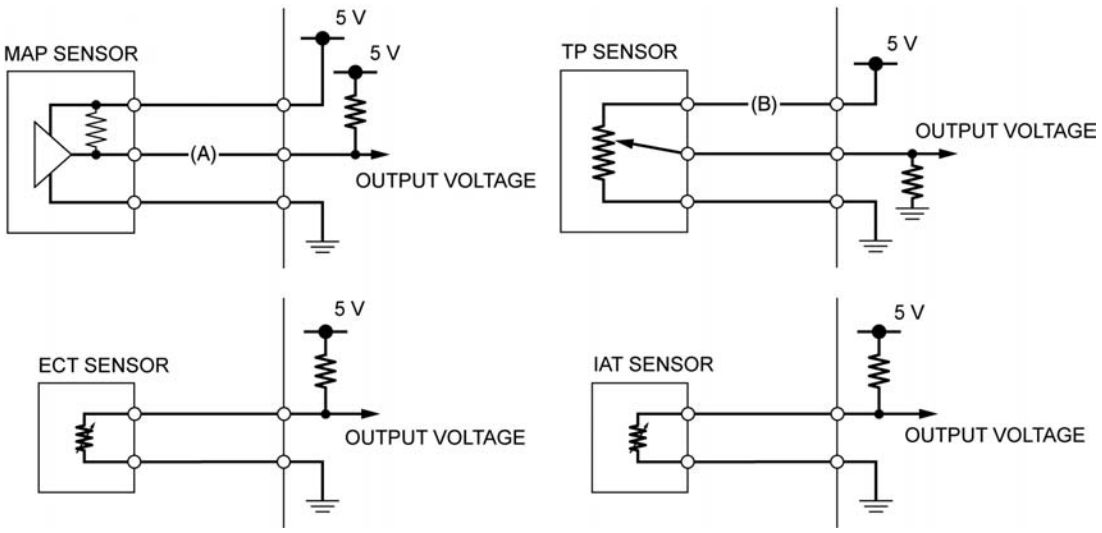

MIL Blink Pattern

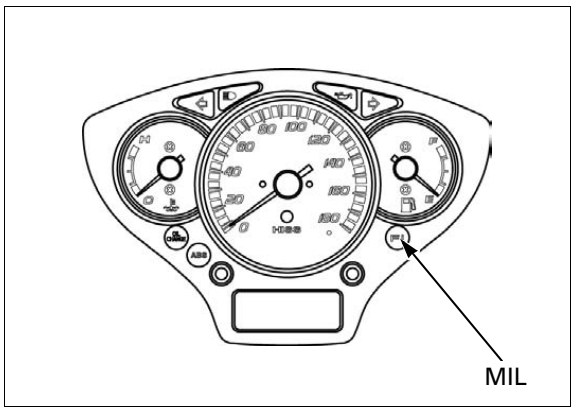

- If the HDS pocket tester is not available, DTC can be read from the ECM memory by the MIL blink pattern.
- The number of MIL blinks is the equivalent the main code of the DTC (the sub code cannot be displayed by the MIL).
- The MIL will blink the current DTC, in case the ECM detects the problem at present, when the ignition switch ON. The MIL will stay ON when the engine speed is over 2,000 min^{-1} (rpm).
- The MIL has two types of blinks, a long blink and short blink. The long blinking lasts for 1.3 seconds, the short blinking lasts for 0.5 seconds. One long blink is the equivalent of ten short blinks. For example, when two long blinks are followed by five short blinks, the MIL is 25 (two long blinks = 20 blinks, plus five short blinks).
- When the ECM stores more than one DTC, the MIL will indicate them by blinking in the order from the lowest number to highest number.

MIL Check

When the ignition switch is turned ON and engine stop switch "", the MIL will stay on for a few seconds, then go off. If the MIL does not come on, inspect the MIL circuit (page 6-43).

CURRENT DTC/FREEZE DTC

The DTC is indicated in two ways according to the failure status.

- In case the ECM detects the problem at present, the MIL will come on and the MIL will start to blink as its DTC. It is possible to readout the MIL blink pattern as the current DTC.
- In case the ECM does not detect any problem at present but has a problem stored in its memory, the MIL will not light and blink. If it is necessary to retrieve the past problem, readout the freeze DTC by following the DTC readout procedure (page 6-12).

HDS POCKET TESTER INFORMATION

- The HDS can readout the DTC, freeze data, current data and other ECM condition.

How to connect the HDS Pocket Tester

Turn the ignition switch to OFF.
Remove the maintenance lid (page 3-4).

Remove the dummy connector from the DLC.
Connect the HDS pocket tester to the DLC.

Turn the ignition switch ON and engine stop switch "", check the DTC and freeze data.

- Freeze data indicates the engine conditions when the first malfunction was detected.

ECM reset

The HDS can reset the ECM data including the DTC, freeze data and some learning memory.

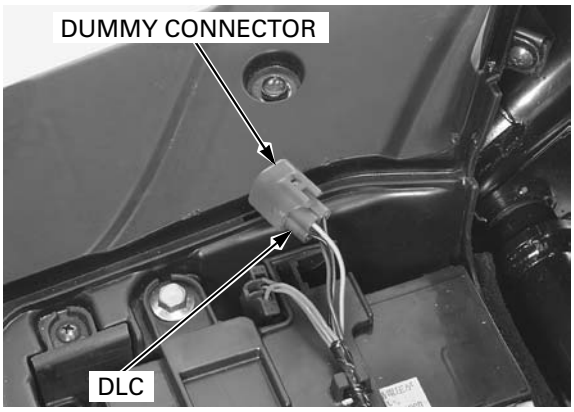

DTC READOUT

Start the engine and check the MIL.

- If the engine will not start, turn the starter motor for more than 10 seconds and check that the MIL blinks.
- When the ignition switch is turned ON, the MIL will stay on for a few seconds, then go off.

If the MIL stays on or blinks, connect the HDS Pocket Tester to the DLC (page 6-12).
Read the DTC, freeze data and follow the trouble-shooting index (page 6-15).

To read the DTC with the MIL blinking, refer to the following procedure.

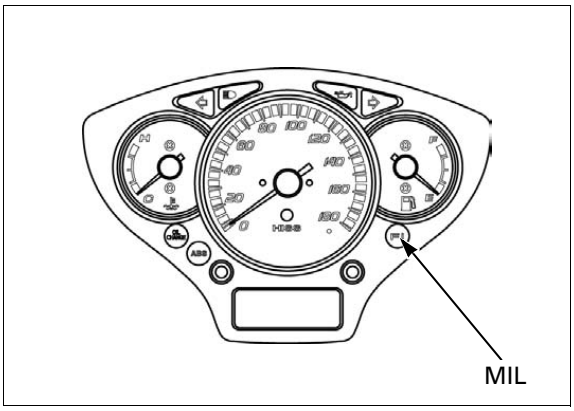

Reading DTC with the MIL

Turn the ignition switch to OFF.
Remove the maintenance lid (page 3-4).

Remove the dummy connector and short DLC terminals using the special tool.

TOOL:
SCS connector 070PZ-ZY30100
CONNECTION: Brown – Green/Black

Turn the ignition switch ON, read, note the MIL blinks and refer to the troubleshooting index (page 6-15).

- If the ECM has any DTC in its memory, the MIL will start blinking.

CLEARING DTC

Connect the HDS Pocket Tester to the DLC (page 6-12).

Clear the DTC with the HDS while the engine is stopped.

To clear the DTC without HDS, refer to the following procedure.

How to clear the DTC with SCS connector

1. Remove the maintenance lid (page 3-4).
2. Turn the ignition switch to OFF.

Make sure the engine stop switch is turned to "".

3. Remove the dummy connector and short the Brown and Green wire terminals of the DLC using the special tool.

   TOOL:
   SCS connector 070PZ-ZY30100
   CONNECTION: Brown – Green/Black

4. Turn the ignition switch to ON.
5. Remove the special tool wire from the DLC.
6. The MIL will light for approximately 5 seconds. While the MIL lights, short the DLC terminals again with the special tool. The self-diagnostic memory is erased if the malfunction indicator goes off and starts blinking.

- The DLC must be jumped while the MIL lights. If not, the MIL will not start blinking.
- Note that the self-diagnostic memory cannot be erased if the ignition switch is turned to "OFF" before the MIL starts blinking.

CIRCUIT INSPECTION

INSPECTION AT ECM CONNECTOR

- Always clean around and keep any foreign material away from the ECM connector before disconnecting it.
- A faulty PGM-FI system is often related to poorly connected or corroded terminals. Check those connections before proceeding.
- In testing at ECM connector (wire harness side) terminal, always use the test probe. Insert the test probe into the connector terminal, then attach the digital multimeter probe to the test probe.

  TOOL:
  Test probe 07ZAJ-RDJA110

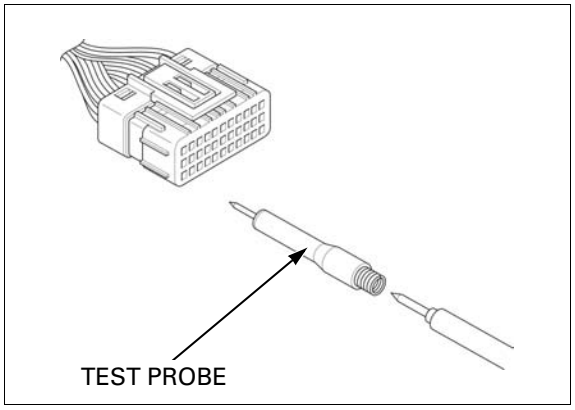

TEST HARNESS CONNECTION

Remove the rear fender A (page 3-7).

Turn the ignition switch to "OFF".

Disconnect the 33P connector from the ECM.

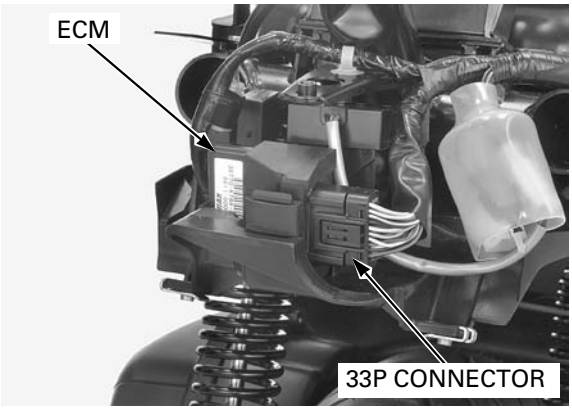

Connect the ECM test harness between the main wire harness and the ECM.

TOOL:
ECM test harness 33P **070MZ-MCA0100**

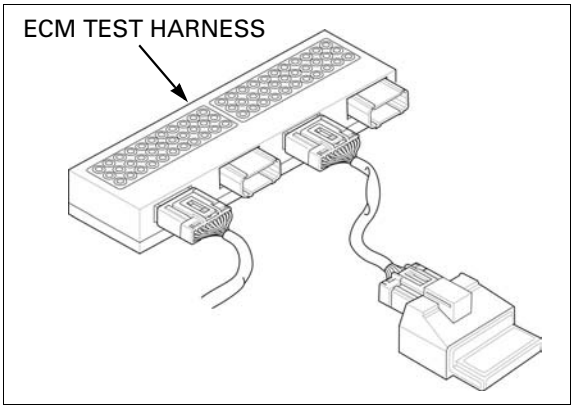

TEST HARNESS TERMINAL LAYOUT

The ECM connector terminals are numbered as shown in this illustration.

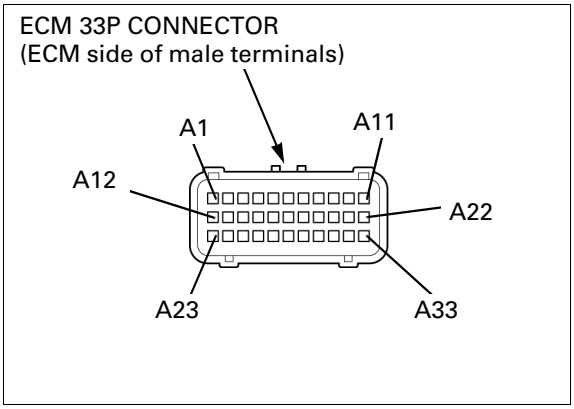

The ECM test harness terminals are same layout as for the ECM connector terminals as shown.

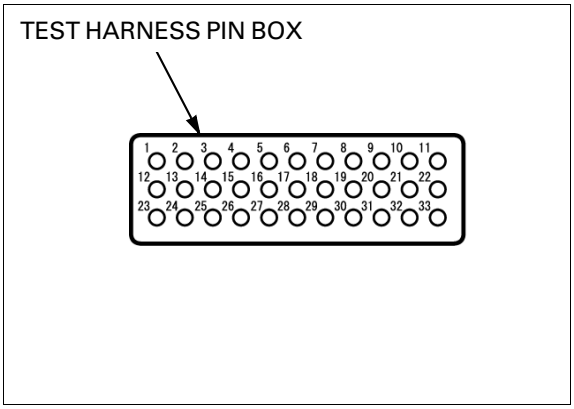

DTC INDEX

DTC (MIL blinks)	Function Failure	Symptom/Fail-safe function	Refer to (DTC)	Refer to (MIL)
1-1 (1)	MAP sensor circuit low voltage (less than 0.195 V) • MAP sensor or its circuit malfunction	• Engine operates normally • Fail-safe value: 760 mmHg/ 1,013 hPa	6-16	6-31
1-2 (1)	MAP sensor circuit high voltage (more than 3.848 V) • Loose or poor contact of the sensor unit connector • MAP sensor or its circuit malfunction	• Engine operates normally • Fail-safe value: 760 mmHg/ 1,013 hPa	6-17	
7-1 (7)	ECT sensor circuit low voltage (less than 0.078 V) • ECT sensor or its circuit malfunction	• Hard start at a low temperature • Fail-safe value: 85°C/185°F • Cooling fan turns on	6-19	6-32
7-2 (7)	ECT sensor circuit high voltage (more than 4.922 V) • Loose or poor contact of the sensor unit connector • ECT sensor or its circuit malfunction	• Hard start at a low temperature • Fail-safe value: 85°C/185°F • Cooling fan turns on	6-20	
8-1 (8)	TP sensor circuit low voltage (less than 0.215 V) • Loose or poor contact of the sensor unit connector • TP sensor or its circuit malfunction	• Poor engine acceleration • Fail-safe value: 0°	6-21	6-34
8-2 (8)	TP sensor circuit high voltage (more than 4.922 V) • TP sensor or its circuit malfunction	• Poor engine acceleration • Fail-safe value: 0°	6-23	
9-1 (9)	IAT sensor circuit low voltage (less than 0.078 V) • IAT sensor or its circuit malfunction	• Engine operates normally • Fail-safe value: 28°C/82°F	6-24	6-36
9-2 (9)	IAT sensor circuit high voltage (more than 4.922 V) • Loose or poor contact of the sensor unit connector • IAT sensor or its circuit malfunction	• Engine operates normally • Fail-safe value: 28°C/82°F	6-25	
12-1 (12)	Injector malfunction • Loose or poor contact of the injector connector • Injector or its circuit malfunction	• Engine does not start • Injector, fuel pump and ignition shut down	6-26	6-38
21-1 (21)	O_2 sensor malfunction • Loose or poor contact of the O_2 sensor connector • O_2 sensor or its circuit malfunction	• Engine operates normally	6-28	6-40
29-1 (29)	IACV malfunction • Loose or poor contact of the IACV connector • IACV or its circuit malfunction	• Engine stalls, hard to start, rough idling	6-29	6-41
33-2 (–)	EEPROM in ECM malfunction • Faulty ECM	• Engine operates normally • Does not hold the self diagnosis data	6-30	–

DTC TROUBLESHOOTING

DTC 1-1 (MAP SENSOR LOW VOLTAGE)

1. MAP Sensor System Inspection

Turn the ignition switch ON and engine stop switch "".
Check the MAP sensor with the HDS pocket tester.

Is about 0 V indicated?

YES – GO TO STEP 2.

NO – Intermittent failure

2. MAP Sensor Input Voltage Inspection

Turn the ignition switch "OFF".
Disconnect the sensor unit 5P (Black) connector.

Turn the ignition switch "ON".

Measure the voltage between the sensor unit 5P (Black) connector of the wire harness side and ground.

CONNECTION: Yellow/Red (+) – Ground (–)
STANDARD: 4.75 – 5.25 V

Is the voltage within 4.75 – 5.25 V?

YES – GO TO STEP 4.

NO – GO TO STEP 3.

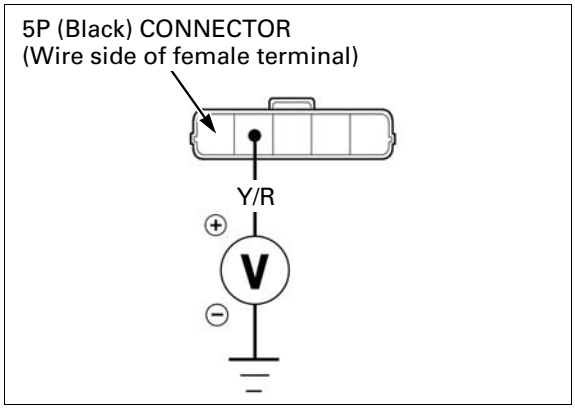

3. MAP sensor Input line Open Circuit Inspection

Turn the ignition switch "OFF".

Disconnect the ECM 33P connector.

Check for continuity between the sensor unit 5P (Black) connector and the ECM 33P connector of the wire harness side.

CONNECTION: Yellow/Red – No. 6 (Yellow/Red)
STANDARD: Continuity

TOOL:
Test probe **07ZAJ-RDJA110**

Is there continuity?

YES – Replace the ECM with a new one, and recheck; refer to Key Registration Procedures (page 23-4)

NO – Open circuit in Yellow/Red wire.

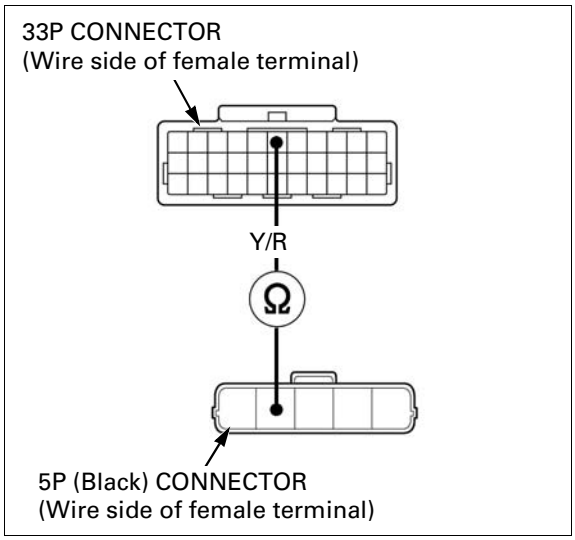

4. **MAP Sensor Output Line Short Circuit Inspection**

   Turn the ignition switch "OFF".

   Disconnect the ECM 33P connector.

   Check for continuity between the 33P connector of the wire harness side and ground with sensor unit connector disconnected.

   CONNECTION: No. 27 (Yellow/Orange) – Ground
   STANDARD: No continuity

   TOOL:
   Test probe 07ZAJ-RDJA110

   Is there continuity?

   YES – Short circuit in the Yellow/Orange wire

   NO – GO TO STEP 5.

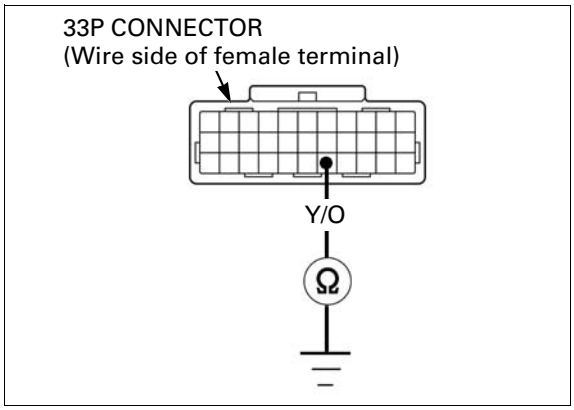

5. **MAP Sensor Inspection**

   Replace the sensor unit with a known good one and clear the DTC.

   Reset the ECM (page 6-12).

   Turn the ignition switch "ON" and engine stop switch "".
   Check the MAP sensor with the HDS pocket tester.

   Is about 0 V indicated?

   YES – Faulty ECM. Replace it with new one and recheck; refer to Key Registration Procedures (page 23-4)

   NO – Faulty original sensor unit (Faulty original MAP sensor)

DTC 1-2 (MAP SENSOR HIGH VOLTAGE)

- Before starting the inspection, check for loose or poor contact on the sensor unit 5P (Black) connector and recheck the DTC.

1. **MAP Sensor System Inspection**

   Turn the ignition switch "ON" and engine stop switch "".

   Check the MAP sensor with the HDS pocket tester.

   Is about 5 V indicated?

   YES – GO TO STEP 2.

   NO –
   - Intermittent failure
   - Loose or poor contact on the sensor unit connector

2. **MAP Sensor Inspection**

Turn the ignition switch "OFF".

Disconnect the sensor unit 5P (Black) connector.

Connect the MAP sensor terminals at the wire harness side with a jumper wire.

CONNECTION: Yellow/Orange – Green/Orange

Turn the ignition switch "ON".
Check the MAP sensor with the HDS pocket tester.

Is about 0 V indicated?

YES – Replace the sensor unit with a new one, and recheck (Faulty MAP sensor)

NO – GO TO STEP 3.

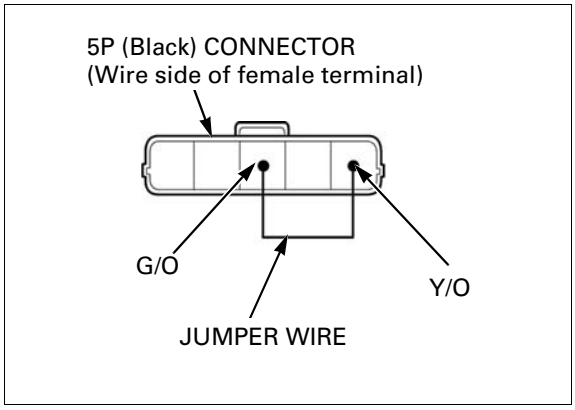

3. **MAP Sensor Output Line Open Circuit Inspection**

Turn the ignition switch "OFF".

Disconnect the ECM 33P connector.

Check for continuity between the sensor unit 5P (Black) connector of the wire harness side and ECM 33P connector of the wire harness side.

CONNECTION: Yellow/Orange – No. 27 (Yellow/Orange)

STANDARD: Continuity

TOOL:
Test probe 07ZAJ-RDJA110

Is there continuity?

YES – GO TO STEP 4.

NO – Open circuit in the Yellow/Orange wire

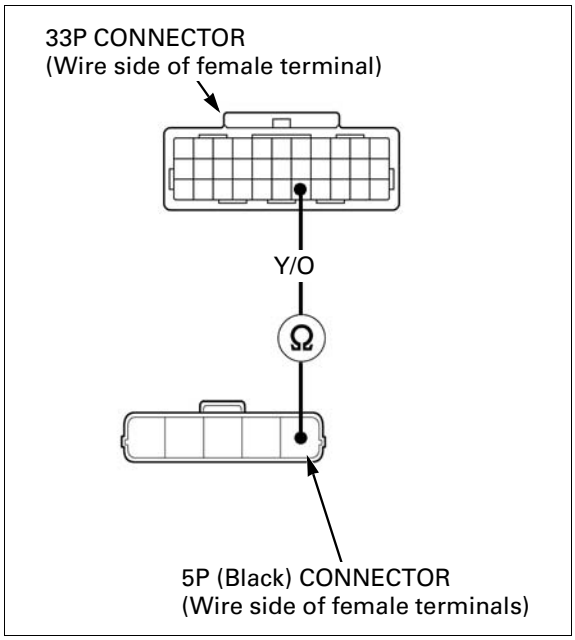

4. **MAP sensor Ground line Open Circuit Inspection**

Turn the ignition switch "OFF".

Check for continuity between the sensor unit 5P (Black) connector of the wire harness side and ECM connector of the wire harness side.

CONNECTION: Green/Orange – No. 4 (Green/Orange)

STANDARD: Continuity

TOOL:
Test probe 07ZAJ-RDJA110

Is there continuity?

YES – Replace the ECM with a new one, and recheck; refer to Key Registration Procedures (page 23-4)

NO – Open circuit in Green/Orange wire

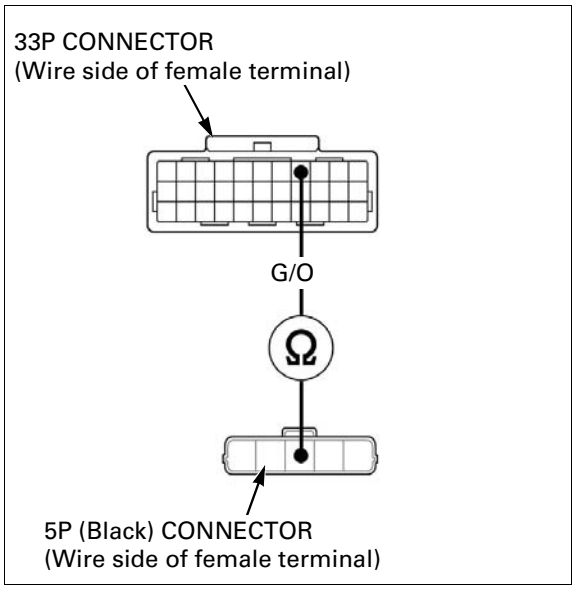

DTC 7-1 (ECT SENSOR LOW VOLTAGE)

1. ECT Sensor System Inspection

Turn the ignition switch "ON" and engine stop switch "".

Check the ECT sensor with the HDS pocket tester.

Is about 0 V indicated?

YES – GO TO STEP 2.

NO – Intermittent failure

2. ECT Sensor Inspection

Turn the ignition switch "OFF".
Disconnect the ECT sensor 3P (Gray) connector.

Turn the ignition switch "ON".
Check the ECT sensor with the HDS pocket tester.

Is about 0 V indicated?

YES – GO TO STEP 4.

NO – GO TO STEP 3.

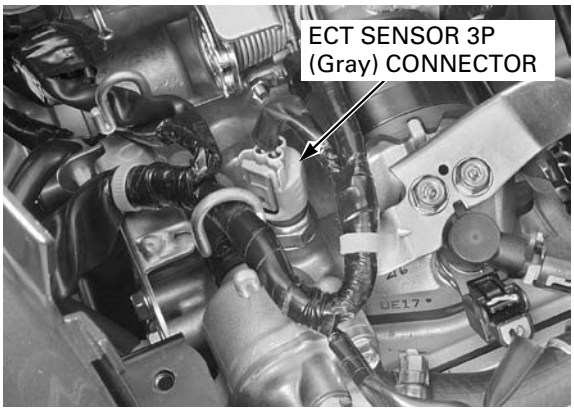

3. ECT Sensor Resistance Inspection

Turn the ignition switch "OFF".

Measure the resistance at the ECT sensor terminals.

CONNECTION: Pink/White – Green/Orange
STANDARD: 2.3 – 2.6 kΩ (20°C/68°F)

Is the resistance within 2.3 – 2.6 kΩ?

YES – Replace the ECM with a new one, and recheck; refer to Key Registration Procedures (page 23-4)

NO – Faulty ECT sensor.

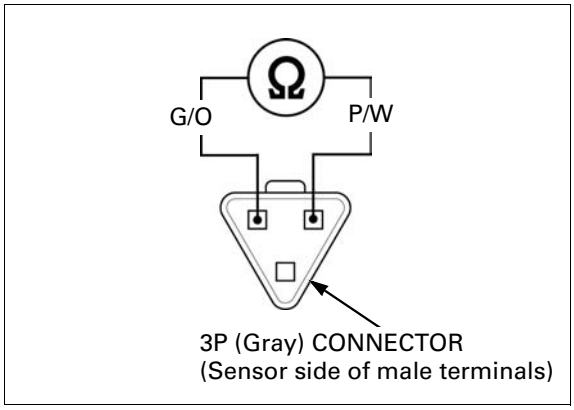

4. ECT Sensor Output Line Short Circuit Inspection

Turn the ignition switch "OFF".
Disconnect the ECM 33P connector from the module.

Check for continuity between the ECT sensor 3P (Gray) connector terminal of the wire harness side and ground with ECM connector disconnected.

Connection: Pink/White – ground

Is there continuity?

YES – Short circuit in Pink/White wire

NO – Replace the ECM with a known good one, and recheck; refer to Key Registration Procedures (page 23-4)

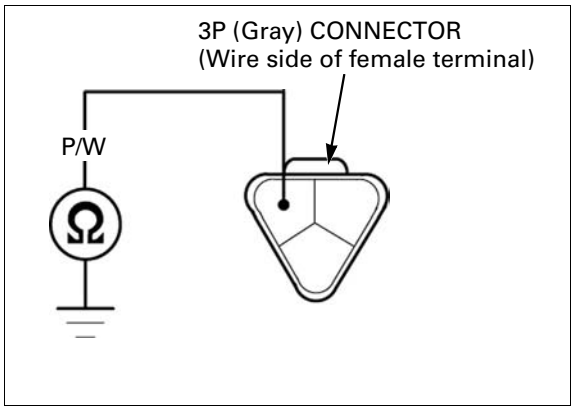

DTC 7-2 (ECT SENSOR HIGH VOLTAGE)

- Before starting the inspection, check for loose or poor contact on the ECT sensor 3P (Gray) connector and recheck the DTC.

1. ECT Sensor System Inspection

Turn the ignition switch "ON" and engine stop switch "".

Check the ECT sensor with the HDS pocket tester.

Is about 5 V indicated?

YES – GO TO STEP 2.

NO – • Intermittent failure
• Loose or poor contact on the ECT sensor 3P (Gray) connector

2. ECT Sensor Inspection

Turn the ignition switch OFF.

Disconnect the ECT sensor 3P (Gray) connector. Connect the ECT sensor terminals with a jumper wire.

Connection: Pink/White – Green/Orange

Turn the ignition switch ON.
Check the ECT sensor with the HDS pocket tester.

Is about 0 V indicated?

YES – Inspect the ECT sensor (page 6-74).

NO – GO TO STEP 3.

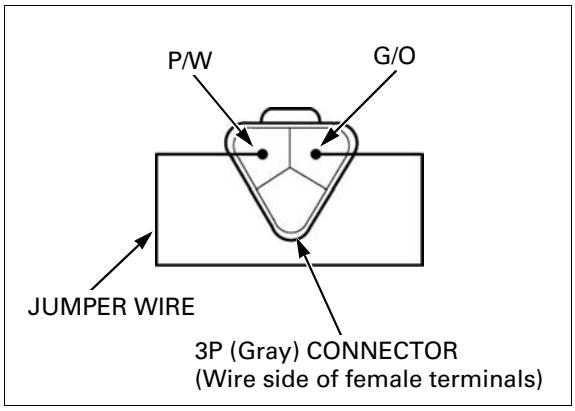

3. ECT Sensor Output/ground Line Inspection

Turn the ignition switch OFF.
Disconnect the jumper wire.

Disconnect the ECM 33P connector.
Check the continuity between the ECT sensor connector of the wire harness side and ECM connector.

Connection: Pink/White – No. 24 (Pink/White)
Green/Orange – No. 4 (Green/Orange)

TOOL:
Test probe 07ZAJ-RDJA110

Are there continuity?

YES – Replace the ECM with new one, and recheck; refer to Key Registration Procedures (page 23-4)

NO – • Open circuit in Pink/White wire
• Open circuit in Green/Orange wire

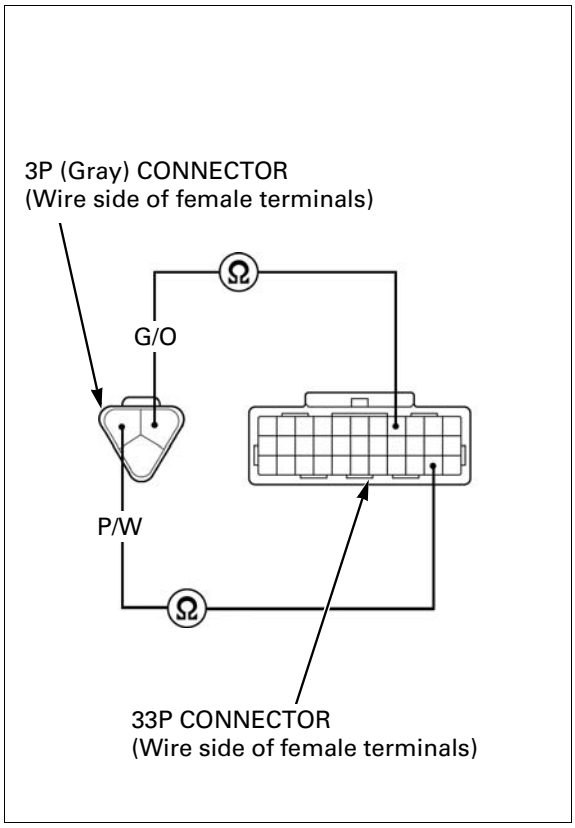

DTC 8-1 (TP SENSOR LOW VOLTAGE)

- Before starting the inspection, check for loose or poor contact on the sensor unit 5P (Black) connector and recheck the DTC.

1. TP Sensor System Inspection

Turn the ignition switch ON and engine stop switch "".

Check the TP sensor with the HDS pocket tester when the throttle fully closed.

Is about 0 V indicated?

YES – GO TO STEP 3.

NO – GO TO STEP 2.

2. TP Sensor Inspection

Check the TP sensor voltage is increasing uninterrupted when moving the throttle from fully closed to fully opened using the data list menu of the HDS pocket tester.

Does the voltage increase continuously?

YES –
- Intermittent failure
- Loose or poor contact on the sensor unit connector

NO – Replace the sensor unit with a new one, and recheck (Faulty TP sensor)

3. TP Sensor Resistance Inspection

Turn the ignition switch "OFF".

Disconnect the sensor unit 5P (Black) connector.

Measure the resistance at the sensor unit side connector.

Connection: White/Red – Green/orange
STANDARD: 0.5 – 0.7 kΩ (20°C/68°F)

Is the resistance within 0.5 – 0.7 kΩ?

YES – GO TO STEP 4.

NO – Replace the sensor unit with a new one, and recheck (Faulty TP sensor)

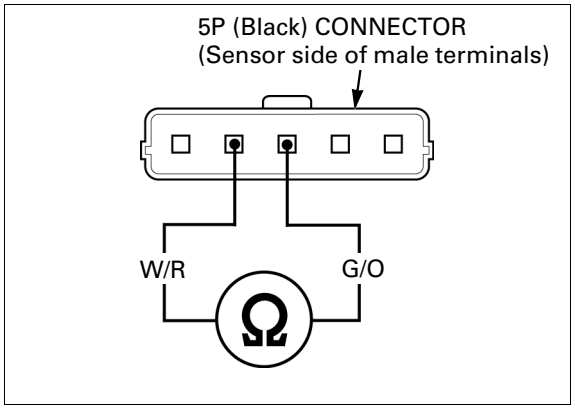

4. TP Sensor Output Line Open Circuit Inspection

Disconnect the ECM 33P connector.

Check for continuity between the ECM 33P connector of the wire harness side and sensor unit 5P connector of the wire harness side.

Connection: White/Red – No. 5 (White/Red)

TOOL:
Test probe **07ZAJ-RDJA110**

Is there continuity?

YES – GO TO STEP 5.

NO – Open circuit in White/Red wire

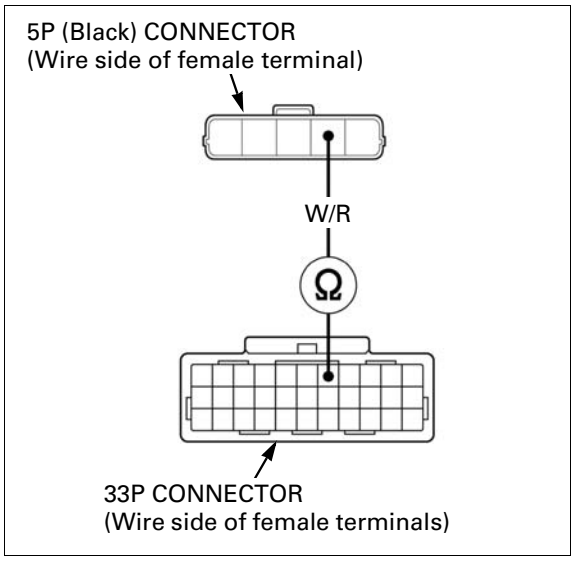

5. TP Sensor Output Line Short Circuit Inspection

Check for continuity between the sensor unit 5P (Black) connector terminal of the wire harness side and ground with ECM connector disconnected.

Connection: White/Red – ground

Is there continuity?

YES – Short circuit in White/Red wire

NO – GO TO STEP 6.

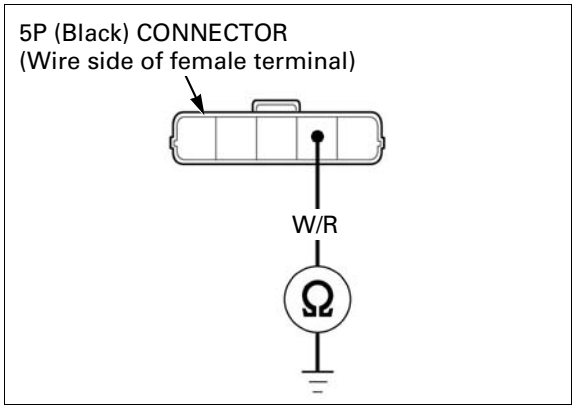

6. TP Sensor Input Voltage Inspection

Connect the ECM 33P connector.
Turn the ignition switch ON.

Measure the voltage between the sensor unit 5P (Black) connector of the wire harness side and ground.

CONNECTION: Yellow/Red (+) – Ground (–)
STANDARD: 4.75 – 5.25 V

Is the voltage within 4.75 – 5.25 V?

YES – Replace the sensor unit with a new one, and recheck

NO – GO TO STEP 7.

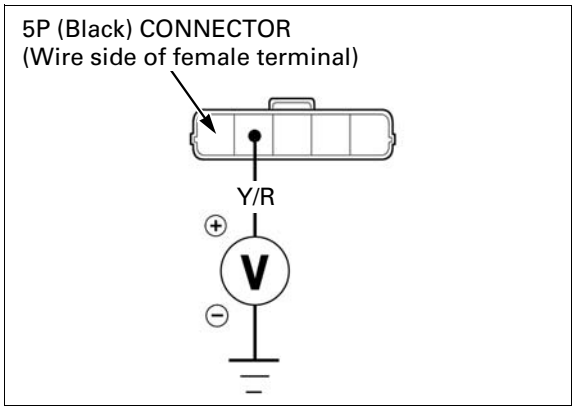

7. TP Sensor Input line Open Circuit Inspection

Turn the ignition switch "OFF".

Disconnect the ECM 33P connector.

Check for continuity between the sensor unit 5P (Black) connector and the ECM 33P connector of the wire harness side.

CONNECTION: Yellow/Red – No. 6 (Yellow/Red)
STANDARD: Continuity

Is there continuity?

YES – Replace the ECM with a new one, and recheck; refer to Key Registration Procedures (page 23-4)

NO – Open circuit in Yellow/Red wire.

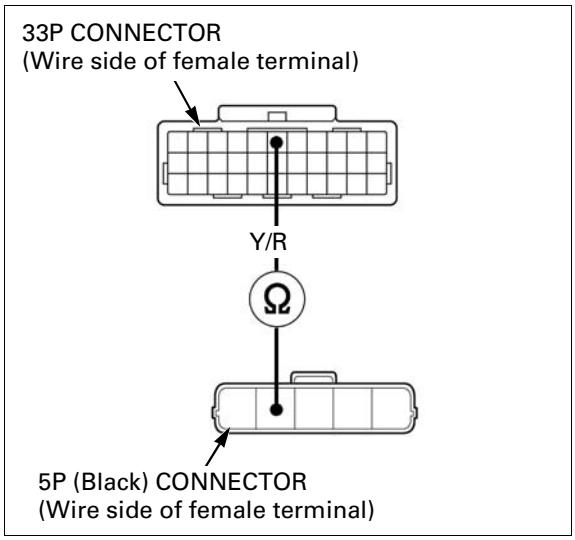

DTC 8-2 (TP SENSOR HIGH VOLTAGE)

1. **TP Sensor System Inspection**

   Turn the ignition switch ON and engine stop switch "".

   Check the TP sensor with the HDS pocket tester with the throttle fully closed.

   Is about 5 V indicated?

   YES – GO TO STEP 3.

   NO – GO TO STEP 2.

2. **TP Sensor Inspection**

   Check the TP sensor voltage is increasing uninterrupted when moving the throttle from fully closed to fully opened using the data list menu of the HDS pocket tester.

   Does the voltage increase continuously?

   YES – Intermittent failure

   NO – Replace the sensor unit with a new one, and recheck (Faulty TP sensor)

3. **TP Sensor Resistance Inspection**

   Turn the ignition switch OFF.

   Disconnect the sensor unit 5P (Black) connector. Measure the resistance at the sensor unit side.

   Connection: White/Red – Green/orange
   STANDARD: 0.5 – 0.7 kΩ (20°C/68°F)

   Is the resistance within 0.5 – 0.7 kΩ?

   YES – GO TO STEP 4.

   NO – Replace the sensor unit with a new one, and recheck (Faulty TP sensor)

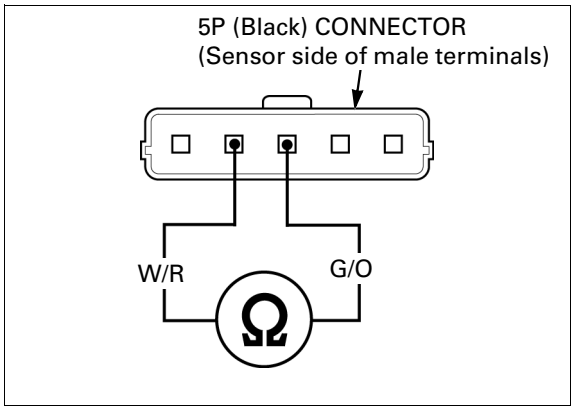

4. **TP Sensor Ground line Inspection**

   Turn the ignition switch ON.

   Measure the voltage between the sensor unit 5P connector of the wire harness side.

   CONNECTION: Yellow/Red (+) – Green/Orange(–)
   STANDARD: 4.75 – 5.25 V

   Is the voltage within 4.75 – 5.25 V?

   YES – Replace the ECM with a new one, and recheck; refer to Key Registration Procedures (page 23-4)

   NO – Open circuit in Green/Orange wire

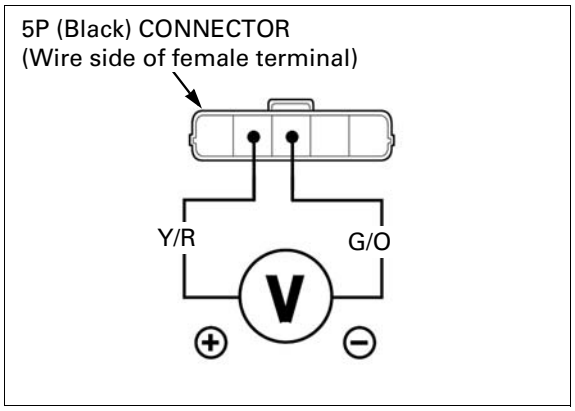

DTC 9-1 (IAT SENSOR LOW VOLTAGE)

1. IAT Sensor System Inspection

Turn the ignition switch ON and engine stop switch "".

Check the IAT sensor with the HDS pocket tester.

Is about 0 V indicated?

YES – GO TO STEP 2.

NO – Intermittent failure

2. IAT Sensor Inspection

Turn the ignition switch "OFF".
Disconnect the sensor unit 5P (Black) connector.

Turn the ignition switch "ON".
Check the ECT sensor with the HDS pocket tester.

Is about 0 V indicated?

YES – GO TO STEP 3.

NO – Faulty IAT sensor

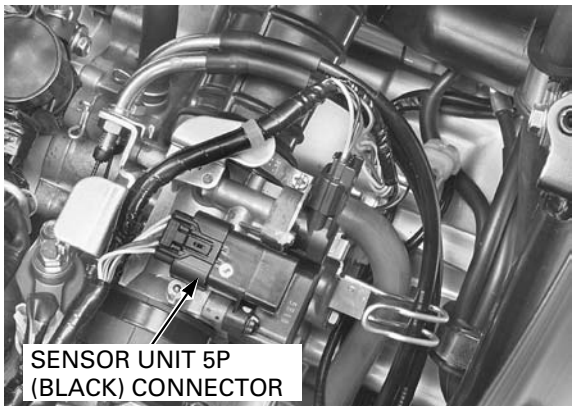

3. IAT Sensor Output Line Short Circuit Inspection

Turn the ignition switch "OFF".

Disconnect the ECM 33P connector.

Check for continuity between the ECM 33P connector of the wire harness side and ground with sensor unit connector disconnected.

CONNECTION: No. 14 (White/Blue) – Ground
STANDARD: No continuity

TOOL:
Test probe 07ZAJ-RDJA110

Is there continuity?

YES – Short circuit in the White/Blue wire

NO – Replace the ECM with a new one, and recheck; refer to Key Registration Procedures (page 23-4)

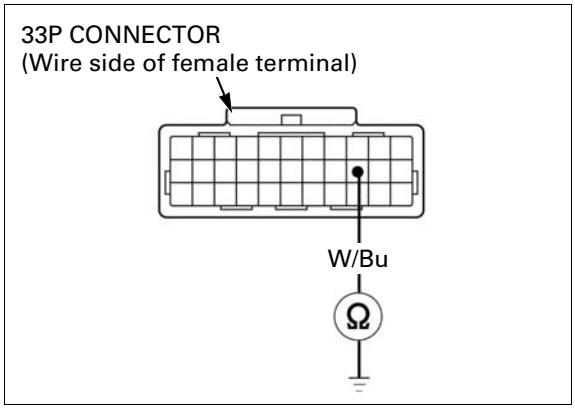

DTC 9-2 (IAT SENSOR HIGH VOLTAGE)

- Before starting the inspection, check for loose or poor contact on the sensor unit 5P (Black) connector and recheck the DTC.

1. IAT Sensor System Inspection

Turn the ignition switch ON and engine stop switch "".

Check the IAT sensor with the HDS pocket tester.

Is about 5 V indicated?

YES – GO TO STEP 2.

NO – • Intermittent failure
• Loose or poor contact on the sensor unit connector

2. IAT Sensor Output Voltage Inspection

Turn the ignition switch "OFF".

Disconnect the sensor unit 5P (Black) connector.

Connect the sensor unit terminals with a jumper wire.

Connection: White/Blue – Green/orange

Turn the ignition switch ON.
Check the IAT sensor with the HDS pocket tester.

Is about 0 V indicated?

YES – Replace the sensor unit with a new one, and recheck. (Faulty IAT sensor)

NO – GO TO STEP 3.

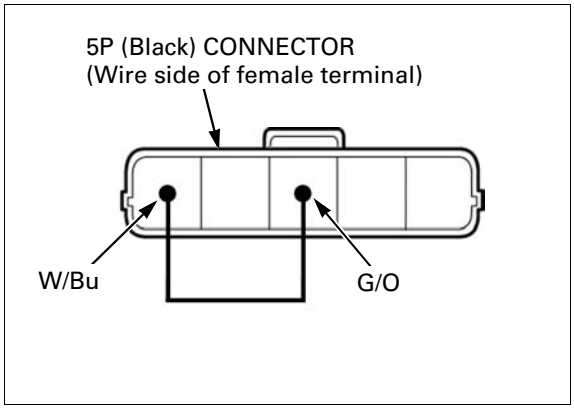

3. IAT Sensor Output Line Open Circuit Inspection

Turn the ignition switch "OFF".
Disconnect the jumper wire.

Disconnect the ECM 33P connector.

Check for continuity between the sensor unit 5P (Black) connector of the wire harness side and ECM 33P connector of the wire harness side.

CONNECTION: White/Blue – No. 14 (White/Blue)
STANDARD: Continuity

TOOL:
Test probe 07ZAJ-RDJA110

Is there continuity?

YES – GO TO STEP 4.

NO – Open circuit in the White/Blue wire

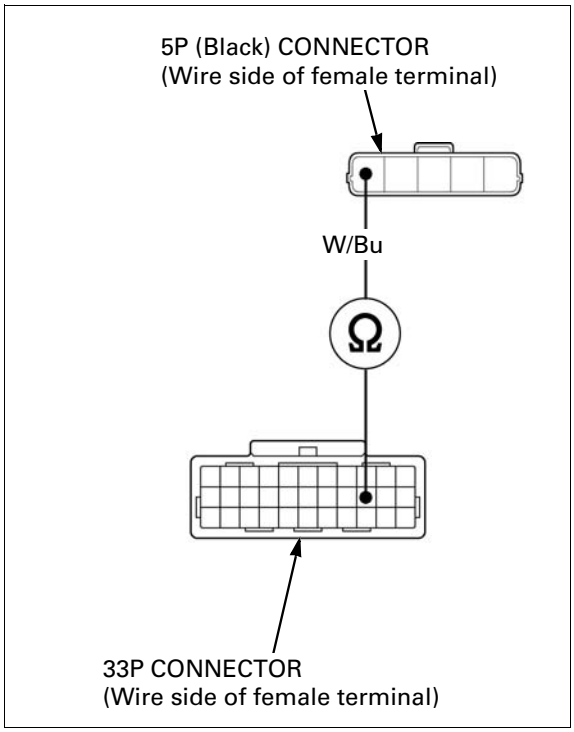

4. IAT sensor Ground line Inspection

Turn the ignition switch "OFF".

Disconnect the ECM 33P connector.

Check for continuity between the sensor unit connector of the wire harness side and ECM connector of the wire harness side.

CONNECTION: Green/Orange – No. 4 (Green/Orange)

STANDARD: Continuity

TOOL:
Test probe 07ZAJ-RDJA110

Is there continuity?

YES – Replace the ECM with a new one, and recheck; refer to Key Registration Procedures (page 23-4)

NO – Open circuit in Green/Orange wire

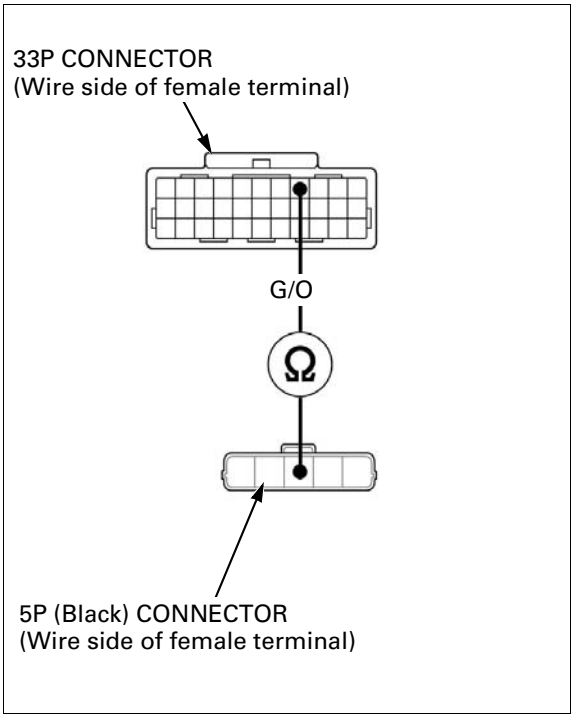

DTC 12-1 (INJECTOR)

- Before starting the inspection, check for loose or poor contact on the injector connector and recheck the DTC.

1. Injector System Inspection

Reset the ECM (page 6-12).
Turn the ignition switch "ON" and engine stop switch "◯", then start the engine and check the injector with the HDS pocket tester.

Is the DTC 12-1 indicated?

YES – GO TO STEP 2.

NO –
- Intermittent failure
- Loose or poor contact on the injector 2P (Gray) connector

2. Injector Input Voltage Inspection

Turn the ignition switch ON.
Disconnect the injector 2P connector.

Turn the ignition switch "ON" and engine stop switch "◯".

Measure the voltage between the injector 2P connector of the wire harness side and ground.

Connection: Black/White (+) – Ground (–)

Does the battery voltage exist?

YES – GO TO STEP 3.

NO – Open circuit in Black/White wire

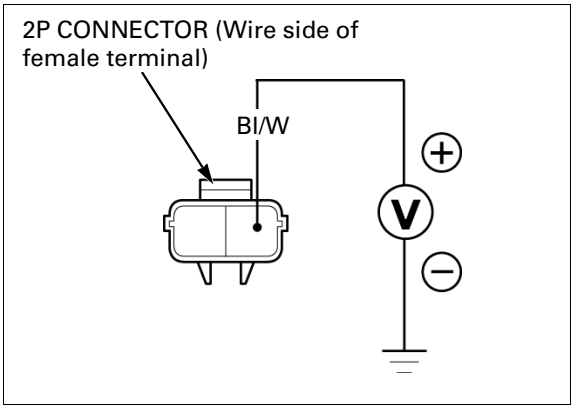

3. Injector Resistance Inspection

Turn the ignition switch OFF.
Measure the resistance of the injector connector terminals.

Is the resistance within 11– 13 Ω (20°C/68°F)?

YES – GO TO STEP 4.

NO – Faulty injector

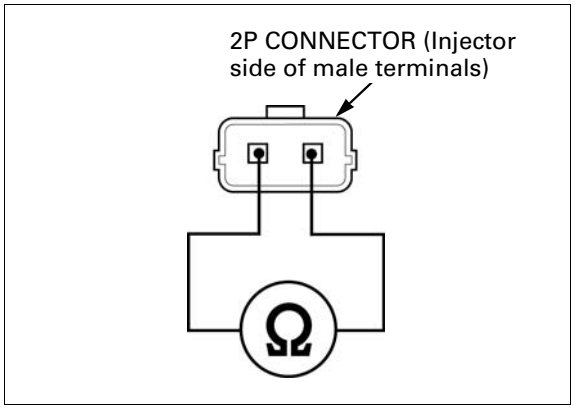

4. Injector Signal Line Open Circuit Inspection

Disconnect the ECM 33P connector.
Check the continuity between the injector 2P connector of the wire harness side and ECM 33P connector of the wire harness side.

Connection: Pink/Blue – No. 16 (Pink/Blue)

TOOL:
Test probe **07ZAJ-RDJA110**

Is there continuity?

YES – GO TO STEP 5.

NO – Open circuit in Pink/Blue wire

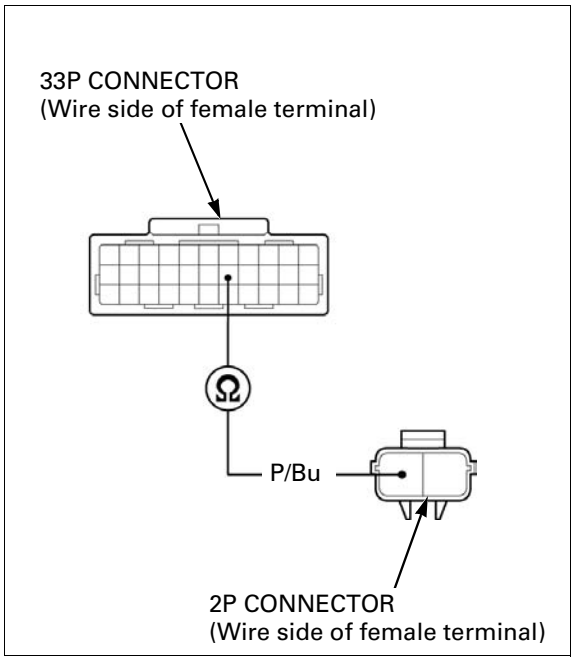

5. Injector Signal Line Short Circuit Inspection

Check for continuity between the injector 2P connector and ground with the ECM connector disconnected.

Connection: Pink/Blue – Ground

Is there continuity?

YES – Short circuit in Pink/Blue wire

NO – Replace the ECM with a known good one, and recheck; refer to Key Registration Procedures (page 23-4)

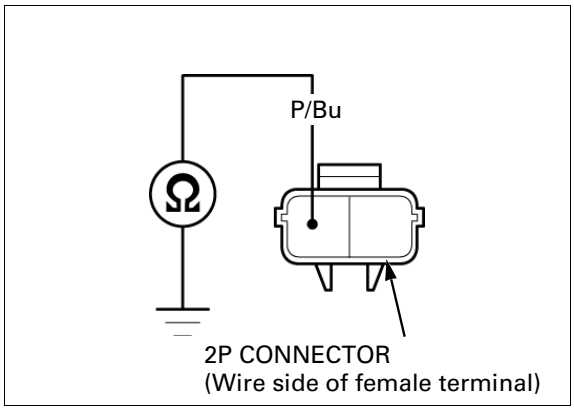

DTC 21-1 (O_2 SENSOR)

- Before starting the inspection, check for loose or poor contact on the O_2 sensor cap connector and recheck the DTC.

1. O_2 Sensor Line Open Circuit Inspection

Turn the ignition switch OFF.

Disconnect the ECM 33P connector and O_2 sensor cap connector.

Check the continuity between the ECM 33P connector of the wire harness side and O_2 sensor cap connector of the wire harness side.

Connection: Black/Orange – No. 3 (Black/Orange)

TOOL:
Test probe **07ZAJ-RDJA110**

Are there continuity?

YES – GO TO STEP 2.

NO – Open circuit in Black/orange wire

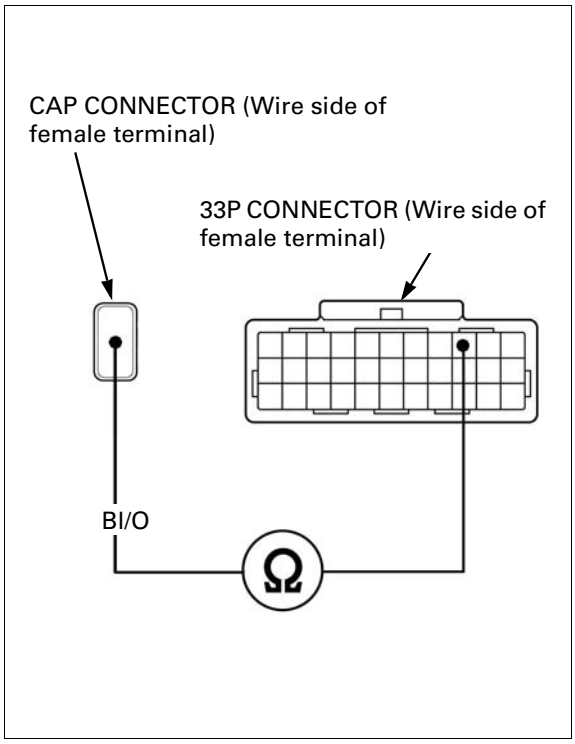

2. O_2 Sensor Line Short Circuit Inspection

Disconnect the ECM 33P connector.

Check for continuity between the ECM 33P connector of the wire harness side and ground.

Connection: No. 3 (Black/orange) – Ground

TOOL:
Test probe **07ZAJ-RDJA110**

Is there continuity?

YES – Short circuit in the Black/Orange wire

NO – GO TO STEP 3.

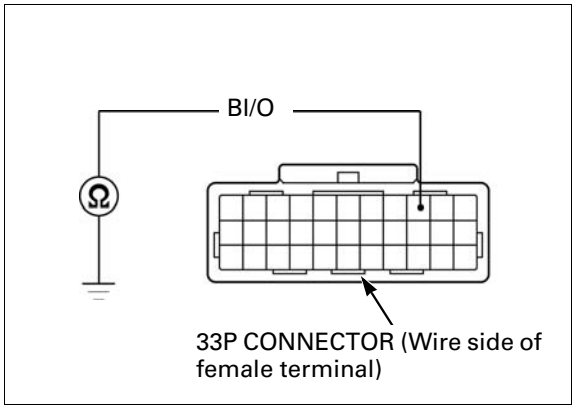

3. O_2 Sensor Inspection

Replace the O_2 sensor with a known good one (page 6-76) and clear the DTC.

Reset the ECM (page 6-12).

Start the engine and warm the engine up to coolant temperature is 80 °C (176 °C).

Test-ride the scooter and check the O_2 sensor with the HDS pocket tester.

Is the DTC 21-1 indicated?

YES – Faulty ECM. Replace it with new one and recheck

NO – Faulty original O_2 sensor

DTC 29-1 (IACV)

- Before starting the inspection, check for loose or poor contact on the IACV 4P connector and recheck the DTC.

1. Recheck DTC

Clear the DTC.
Start the engine and recheck the DTC.

Is the DTC 29-1 indicated?

YES – GO TO STEP 2.

NO – • Intermittent failure
• Loose or poor contact on the IACV 4P connector

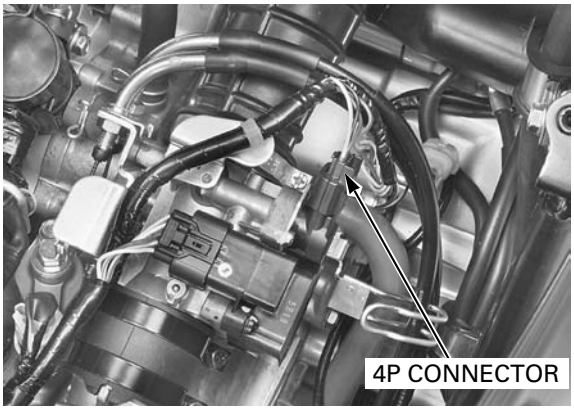

2. IACV Short Circuit Inspection

Turn the ignition switch "OFF".
Disconnect the IACV 4P connector.

Check for continuity between the IACV 4P connector of the wire harness side and ground.

Connection: Light green – Ground
Brown– Ground
Gray/Red – Ground
Black/Red – Ground

Are there continuities?

YES – • Short circuit in Light green or Brown wire
• Short circuit in Gray/red or Black/Red wire

NO – GO TO STEP 3.

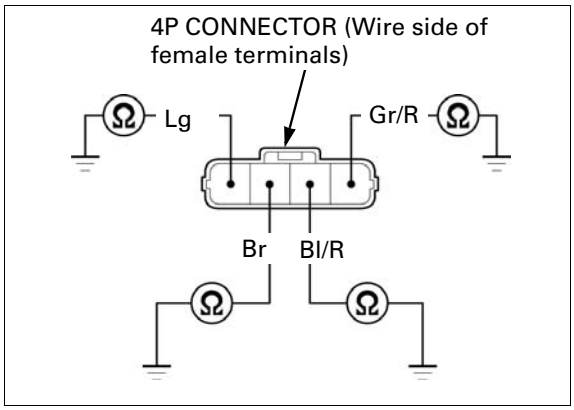

3. IACV Circuit Continuity Inspection

Disconnect the ECM 33P connector.
Check the continuity between the ECM 33P connector terminals and the IACV 4P connector terminals of the wire harness side.

Connection: Light green – No. 21 (Light green)
Brown – No. 20 (Brown)
Gray/Red – No. 32 (Gray/Red)
Black/Red – No. 31 (Black/Red)

TOOL:
Test probe **07ZAJ-RDJA110**

Are there continuity?

YES – GO TO STEP 4.

NO – • Open circuit in Light green or Brown wire
• Open circuit in Gray/red or Black/Red wire

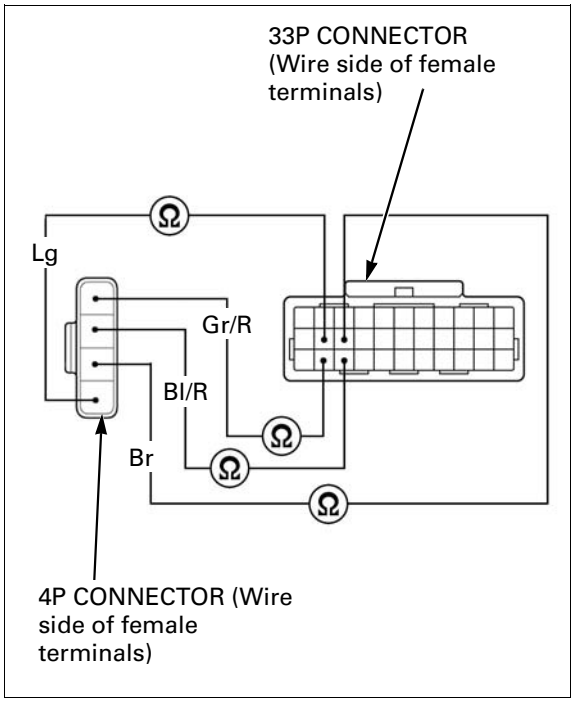

4. IACV Resistance Inspection

Measure the resistance at the IACV 4P connector terminals of the IACV side.

Connection: A – D
B – C

STANDARD: 110 – 150 Ω (20 °C/68 °F)

Is the resistance within 110 – 150 Ω (20°C/68°F)?

YES – GO TO STEP 5.

NO – Faulty IACV. Replace the IACV with a new one, and recheck.

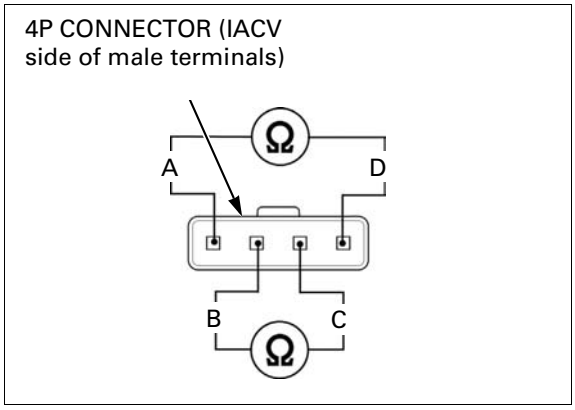

5. IACV Short Circuit Inspection

Check for continuity at the IACV 4P connector terminals of the IACV side.

Connection: A – B
C – D

STANDARD: No continuity

Is there continuity?

YES – Faulty IACV. Replace the IACV with a new one, and recheck.

NO – Replace the ECM with new one, and recheck; refer to Key Registration Procedures (page 23-4)

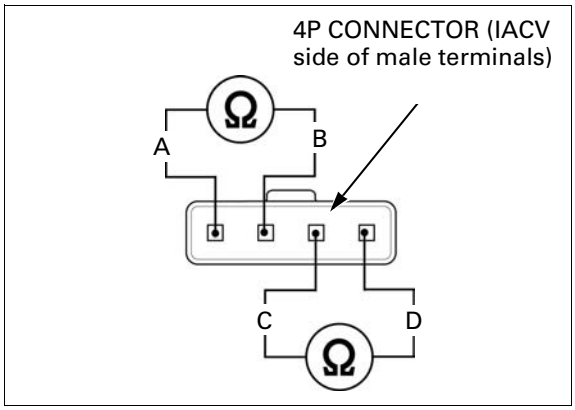

DTC 33-2 (EEPROM)

1. Recheck DTC

Clear the DTC.
Turn the ignition switch "ON" and recheck the DTC.

Is the DTC 33-2 indicated?

YES – Replace the ECM with new one, and recheck; refer to Key Registration Procedures (page 23-4)

NO – Intermittent failure

MIL TROUBLESHOOTING

MIL 1 BLINK (MAP SENSOR)

- Before starting the inspection, check for loose or poor contact on the sensor unit 5P (Black) connector and recheck the MIL blinking.

1. MAP Sensor System Inspection

Turn the ignition switch OFF.

Connect the ECM test harness to ECM connector (page 6-14).
Turn the ignition switch ON and engine stop switch "◯".
Measure the voltage at the test harness terminals.

Connection: A27(+) – A4 (–)

Is the voltage within 2.7 – 3.1 V?

YES – • Intermittent failure
• Loose or poor contact on the ECM connector

NO – • About 5 V
GO TO STEP 2.
• About 0 V
GO TO STEP 3.

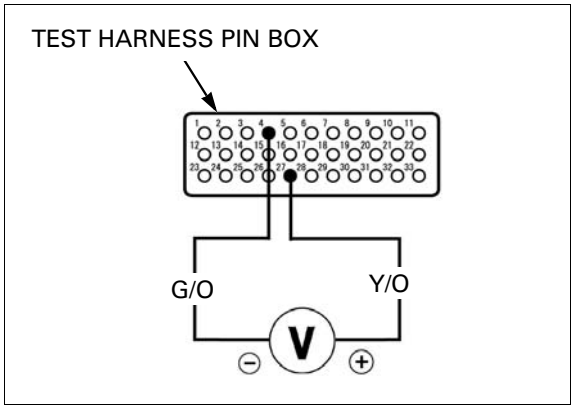

2. MAP Sensor Output Voltage Inspection

Turn the ignition switch OFF.
Disconnect the sensor unit 5P (Black) connector.

Turn the ignition switch ON and engine stop switch "◯".
Measure the voltage at the wire harness side.

Connection: Yellow/Orange (+) – Green/Orange(–)

Is the voltage within 4.75 – 5.25 V?

YES – Replace the sensor unit with a new one, and recheck (Faulty MAP sensor)

NO – • Open circuit in Yellow/Orange wire
• Open circuit in Green/Orange wire

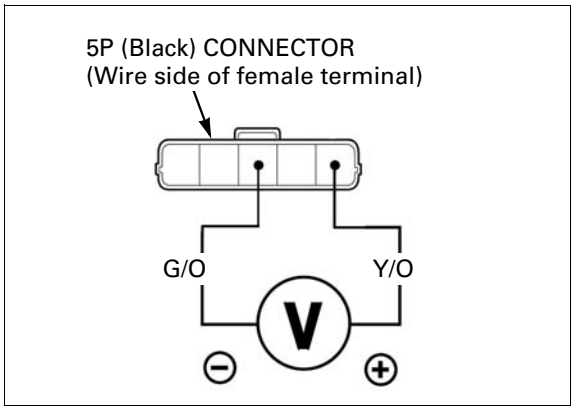

3. MAP Sensor Input Voltage Inspection

Turn the ignition switch "OFF".

Disconnect the sensor unit 5P (Black) connector.

Turn the ignition switch ON.

Measure the voltage between the sensor unit 5P connector of the wire harness side and ground.

CONNECTION: Yellow/Red (+) – Ground (–)
STANDARD: 4.75 – 5.25 V

Is the voltage within 4.75 – 5.25 V?

YES – GO TO STEP 5.

NO – GO TO STEP 4.

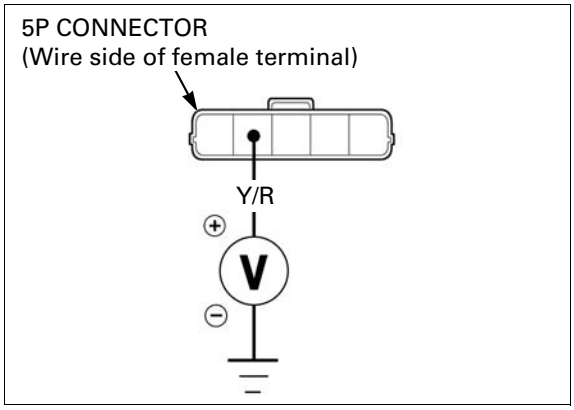

4. MAP Sensor Input Line Inspection

Turn the ignition switch OFF.
Connect the ECM test harness to ECM connector (page 6-14).

Turn the ignition switch ON and engine stop switch "".
Measure the voltage between the test harness terminal and ground.

Connection: A6 (+) – Ground (–)
STANDARD: 4.75 – 5.25 V

Is the voltage within 4.75 – 5.25 V?

YES – Open circuit in Yellow/Red wire.

NO – Replace the ECM with new one, and recheck; refer to Key Registration Procedures (page 23-4)

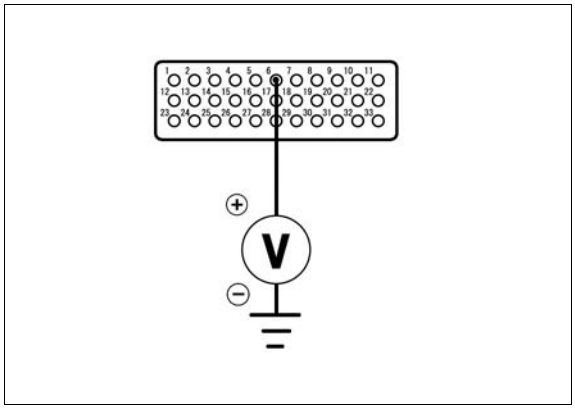

5. MAP Sensor Output Line Short Circuit Inspection

Turn the ignition switch "OFF".

Disconnect the test harness and ECM 33P connector disconnected.

Check for continuity between the sensor unit 5P (Black) connector terminal of the wire harness side and ground.

Connection: Yellow/Orange – Ground

Is there continuity?

YES – Short circuit in Yellow/Orange wire

NO – Replace the sensor unit with a new one, and recheck (Faulty MAP sensor)

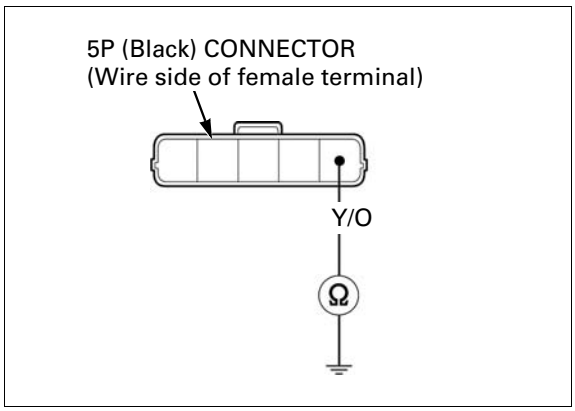

MIL 7 BLINKS (ECT SENSOR)

- Before starting the inspection, check for loose or poor contact on the ECT sensor 3P (Gray) connector and recheck the MIL blinking.

1. ECT Sensor System Inspection

Turn the ignition switch OFF.
Connect the test harness to ECM 33P connector (page 6-14).

Turn the ignition switch ON and engine stop switch "".
Measure the voltage at the test harness terminals.

Connection: A24 (+) – A4 (–)
Standard: 2.7 – 3.1 V (20°C/68°F)

Is the voltage within 2.7 – 3.1 V?

YES –
- Loose or poor contact on the ECM connector
- Intermittent failure

NO – GO TO STEP 2.

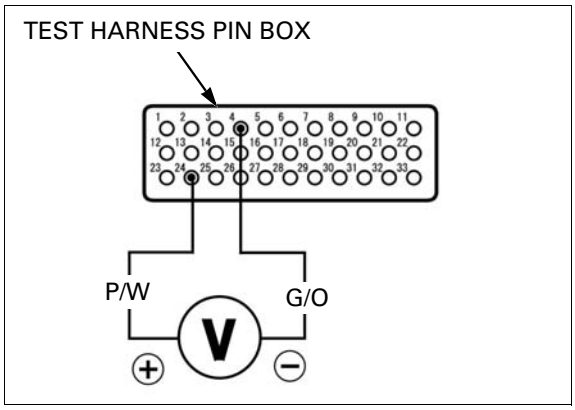

2. ECT sensor Output Voltage Inspection

Turn the ignition switch OFF.
Disconnect the ECT sensor 3P (Gray) connector.

Turn the ignition switch ON and engine stop switch "◯".
Measure the voltage at ECT sensor connector of the wire harness side.

Connection: Pink/White (+) – Green/Orange (–)

Is the voltage within 4.75 – 5.25 V?

YES – GO TO STEP 3.

NO – GO TO STEP 4.

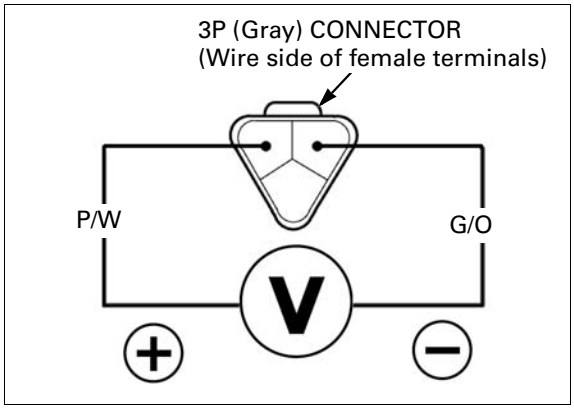

3. ECT Sensor Resistance Inspection

Turn the ignition switch OFF.

Measure the resistance at the ECT sensor terminals.

Connection: Pink/white – Green/orange (Sensor side terminals)
Standard: 2.3 – 2.6 kΩ (20°C/68°F)

Is the resistance within 2.3 – 2.6 kΩ (20°C/68°F)?

YES – Replace the ECM with a known good one, and recheck; refer to Key Registration Procedures (page 23-4)

NO – Faulty ECT sensor.

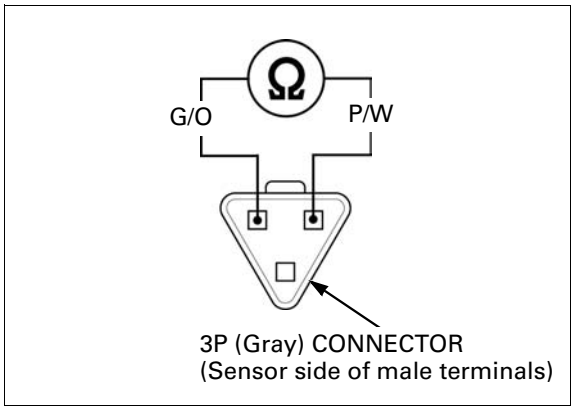

4. ECT Sensor Output/Ground Line Open Circuit Inspection

Turn the ignition switch OFF.

Check the continuity between the test harness terminals and ECT sensor connector of the wire harness side.

Connection: A24 – Pink/white
A4 – Green/orange

Is there continuity?

YES – GO TO STEP 5.

NO – • Open circuit in Pink/white wire
• Open circuit in Green/orange wire

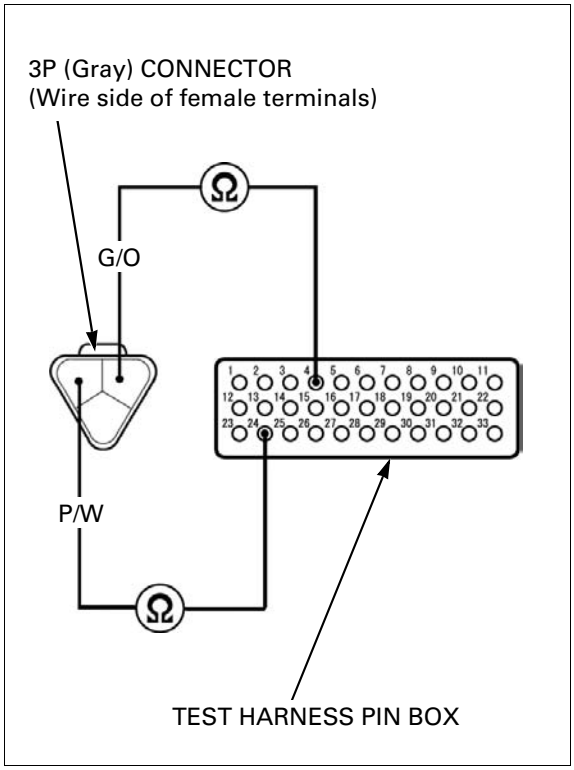

5. ECT Sensor Output Line Short Circuit Inspection

Disconnect the test harness and ECM 33P connector disconnected.

Check for continuity between the ECT sensor connector of the wire harness side and ground.

Connection: Pink/white – Ground

Is there continuity?

YES – Short circuit in Pink/white wire

NO – Replace the ECM with a known good one, and recheck; refer to Key Registration Procedures (page 23-4)

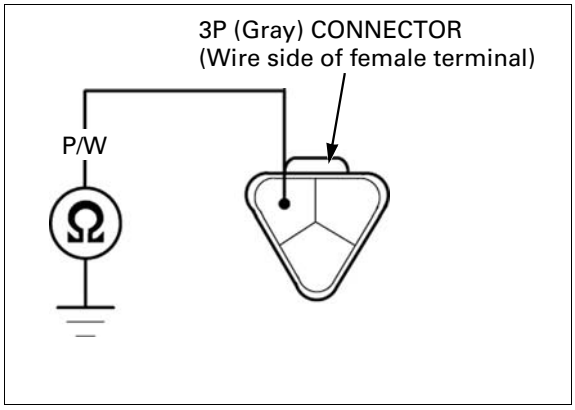

MIL 8 BLINKS (TP SENSOR)

- Before starting the inspection, check for loose or poor contact on the sensor unit 5P (Black) connector and recheck the MIL blinking.

1. TP Sensor System Inspection

Turn the ignition switch OFF.
Connect the ECM test harness to ECM connector (page 6-14).

Turn the ignition switch ON and engine stop switch "".
Measure the TP sensor output voltage at the test harness terminals.

Connection: A5 (+) – A4 (–)
Standard: *0.4 – 0.6 V (throttle fully closed)
***4.2 – 4.8 V (throttle fully opened)**

- A voltage marked * refers to the value of the ECM output voltage (Step 2) when the voltage reading shows 5 V.
  When the ECM output voltage reading shows other than 5 V, derive the TP sensor output voltage at the test harness as follows:
  In the case of the ECM output voltage is 4.75 V:
  0.4 X 4.75/5.0 = 0.38 V
  0.6 X 4.75/5.0 = 0.57 V
  Thus, the solution is “0.38 – 0.57 V” with the throttle fully closed.
  Replace 0.4 and 0.6 with 4.2 and 4.8 respectively, in the above equations to determine the throttle fully opened range.

Is there standard voltage?

YES –
- Intermittent failure
- Loose or poor contact on the ECM connector

NO – GO TO STEP 2.

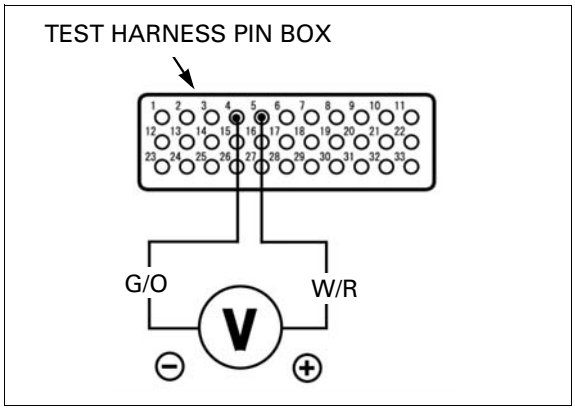

2. TP Sensor Input Voltage Inspection

Turn the ignition switch OFF.
Disconnect the sensor unit 5P (Black) connector.

Turn the ignition switch ON and engine stop switch "".

Measure the voltage between the sensor unit 5P (Black) connector of the wire harness side.

CONNECTION: Yellow/Red (+) – Green/Orange(–)
STANDARD: 4.75 – 5.25 V

Is the voltage within 4.75 – 5.25 V?

YES – GO TO STEP 4.

NO – GO TO STEP 3.

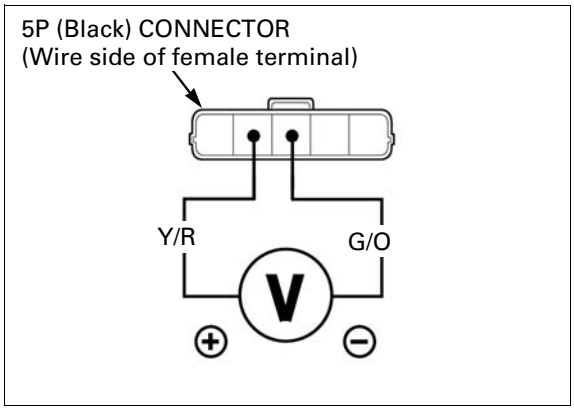

3. TP Sensor Input Line Inspection

Turn the ignition switch OFF.
Connect the ECM test harness to ECM connector (page 6-14).

Turn the ignition switch ON and engine stop switch "".
Measure the voltage at the test harness terminals.

Connection: A6 (+) – A4(–)
STANDARD: 4.75 – 5.25 V

Is the voltage within 4.75 – 5.25 V?

YES – • Open circuit in Yellow/Red wire.
• Open circuit in Green/Orange wire.

NO – Replace the ECM with new one, and recheck; refer to Key Registration Procedures (page 23-4)

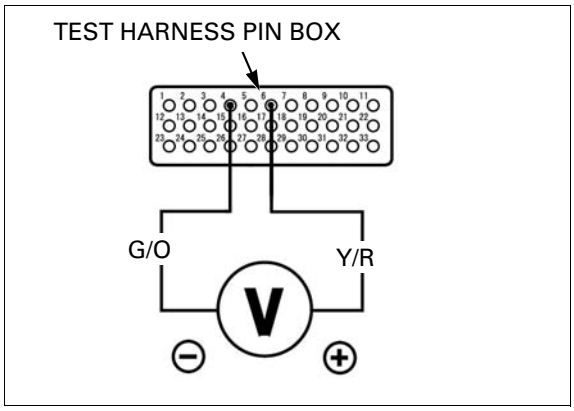

4. TP Sensor Output Line Inspection

Turn the ignition switch OFF.

Check the continuity between the sensor unit 5P (Black) connector terminal of the wire harness side and the test harness terminal.

Connection: A5 – White/Red

Is there continuity?

YES – GO TO STEP 5.

NO – Open circuit in White/Red wire

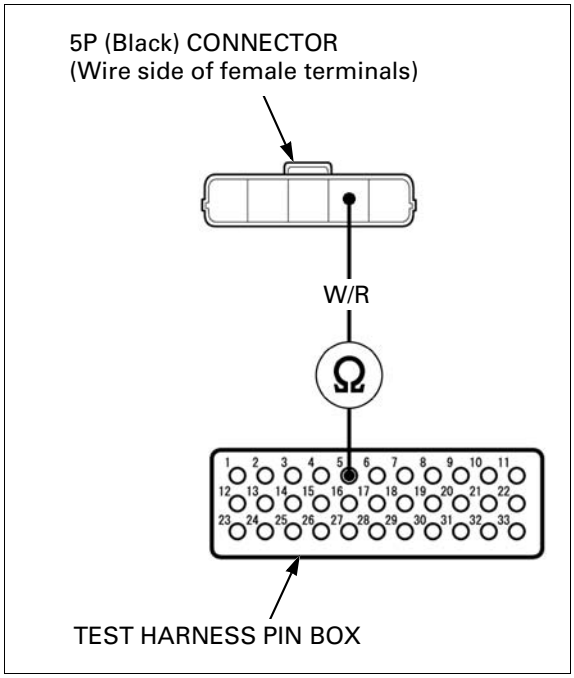

5. TP Sensor Output Line Short Circuit Inspection

Turn the ignition switch OFF.

Disconnect the test harness and ECM 33P connector disconnected.

Check for continuity between the sensor unit 5P (Black) connector terminal of the wire harness side and ground.

Connection: White/Red (+) – Ground (–)

Is there continuity?

YES – Short circuit in White/Red wire

NO – Replace the sensor unit with a new one, and recheck (Faulty TP sensor)

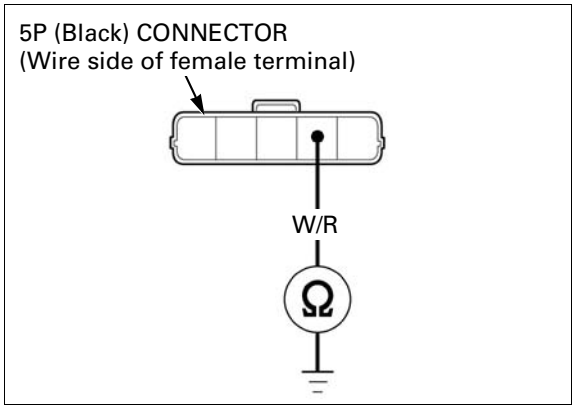

MIL 9 BLINKS (IAT SENSOR)

- Before starting the inspection, check for loose or poor contact on the sensor unit 5P (Black) connector and recheck the MIL blinking.

1. IAT Sensor system Inspection

Turn the ignition switch OFF.
Connect the ECM test harness to ECM connector (page 6-14).

Turn the ignition switch ON and engine stop switch "".
Measure the voltage at the test harness terminals.

Connection: A14 (+) – A4 (–)
Standard: 2.7 – 3.1 V (20°C/68°F)

Is the voltage within 2.7 – 3.1 V?

YES –
- Intermittent failure
- Loose or poor contact on the ECM connector

NO – GO TO STEP 2.

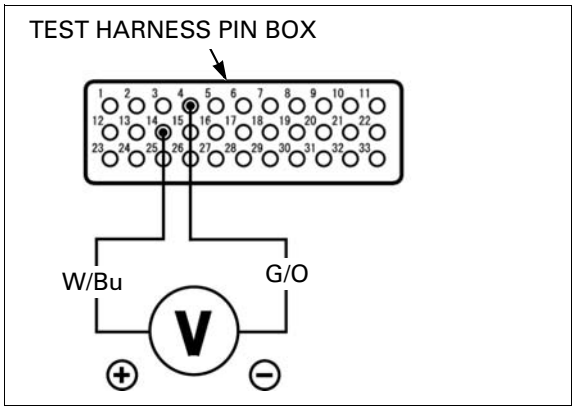

2. IAT Sensor Output Voltage Inspection

Turn the ignition switch "OFF".

Disconnect the sensor unit 5P (Black) connector.

Turn the ignition switch "ON" and engine stop switch "".

Measure the voltage at the sensor unit 5P (Black) connector of the wire harness side.

CONNECTION: White/Blue (+) – Green/Orange (–)
STANDARD: 4.75 – 5.25 V

Is the voltage within 4.75 – 5.25 V?

YES – GO TO STEP 3.

NO – GO TO STEP 4.

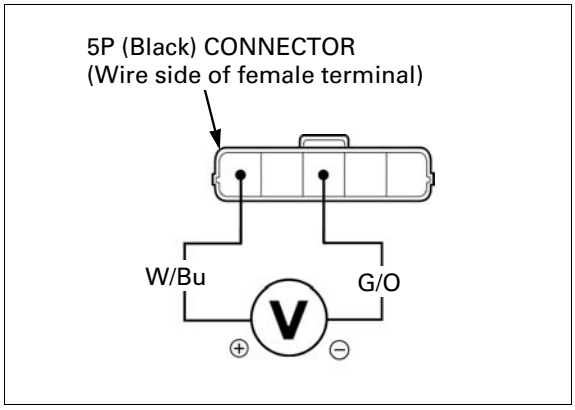

3. IAT Sensor Resistance Inspection

Turn the ignition switch OFF.

Measure the resistance at the IAT sensor terminals.

CONNECTION: White/blue – Green/orange
STANDARD: 1 – 4 kΩ (20°C/68°F)

Is the resistance within 1 – 4 kΩ?

YES – Replace the ECM with new one, and recheck; refer to Key Registration Procedures (page 23-4)

NO – Replace the sensor unit with a new one, and recheck (Faulty IAT sensor).

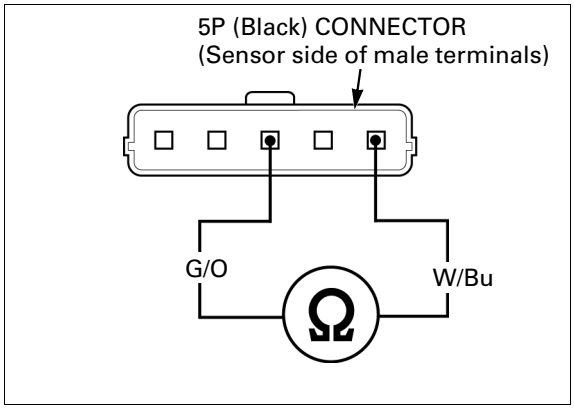

4. IAT Sensor Output/Ground Line Open Circuit Inspection

Turn the ignition switch OFF.

Check the continuity between the sensor unit 5P (Black) connector terminal and test harness terminal.

Connection: A14 – White/Blue
A4 – Green/Orange

Is there continuity?

YES – GO TO STEP 5.

NO – • Open circuit in White/Blue wire
• Open circuit in Green/Orange wire

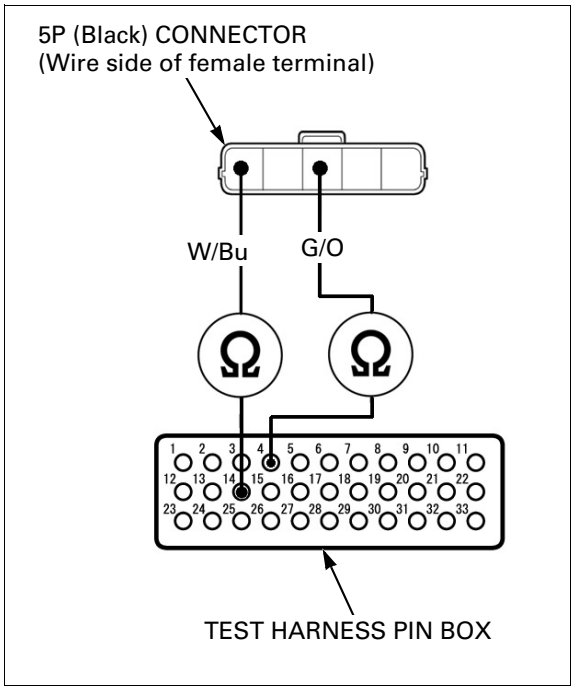

5. IAT Sensor Output Line Short Circuit Inspection

Disconnect the test harness and ECM 33P connector disconnected.

Check for continuity between the sensor unit 5P (Black) connector terminal of the wire harness side and ground.

Connection: White/Blue – Ground

Is there continuity?

YES – Short circuit in White/Blue wire

NO – Replace the ECM with new one, and recheck; refer to Key Registration Procedures (page 23-4)

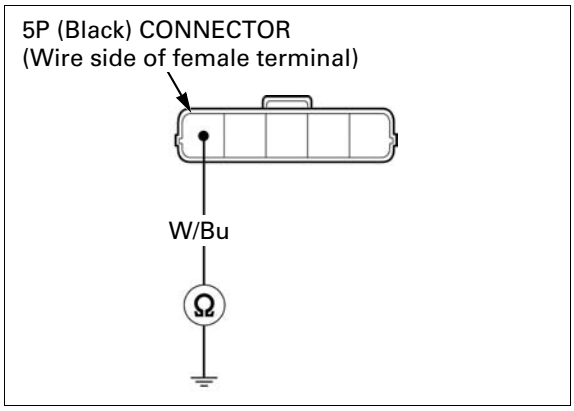

MIL 12 BLINKS (INJECTOR)

- Before starting the inspection, check for loose or poor contact on the injector 2P connector and recheck the MIL blinking.

1. Injector Input Voltage Inspection

Disconnect the injector 2P connector.

Turn the ignition switch ON and engine stop switch to "".
Measure the voltage between the injector 2P connector of the wire harness side and ground.

Connection: Black/white (+) – Ground (–)

Does the battery voltage exist?

YES – GO TO STEP 2.

NO – Open circuit in Black/white wire

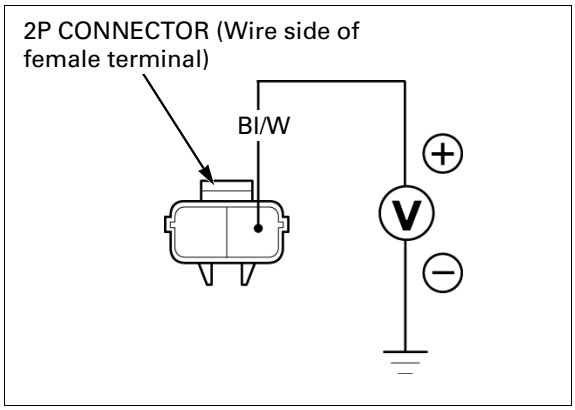

2. Injector Resistance Inspection

Turn the ignition switch OFF.

Measure the resistance of the injector connector terminals.

STANDARD: 11 – 13 Ω (20 °C/68 °F)

Is the resistance within 11 – 13 Ω (20°C/68°F)?

YES – GO TO STEP 3.

NO – Faulty injector

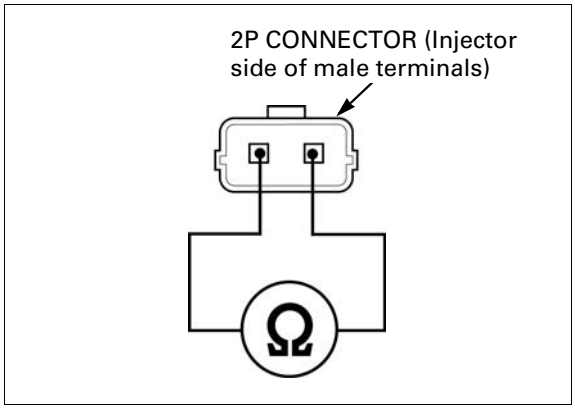

3. Injector Circuit Resistance Inspection

Connect the test harness to the ECM 33P connector (page 6-14).

Check for continuity between the test harness terminal and injector 2P connector of the wire harness side.

Connection: A16 – Pink/Blue

Is there continuity?

YES – GO TO STEP 4.

NO – Open circuit in Pink/Blue wire

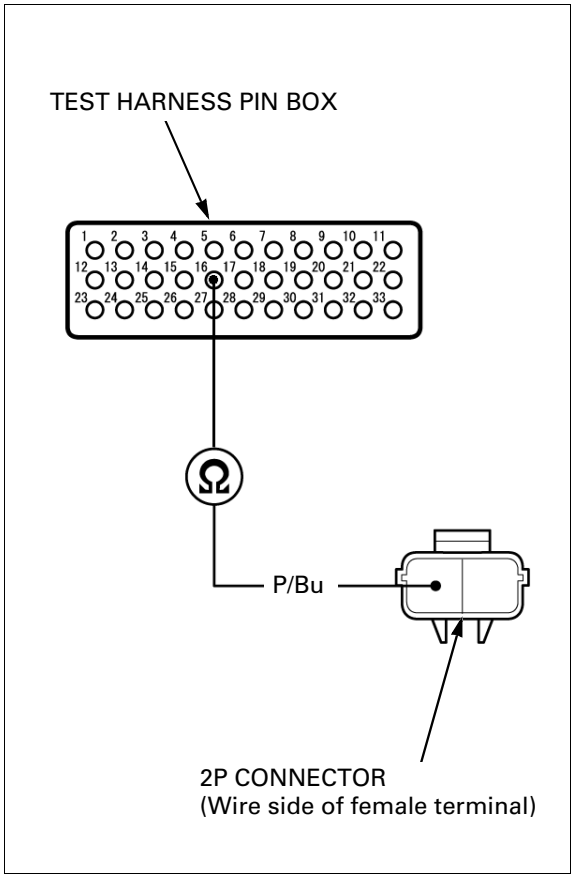

4. Injector Signal Line Short Circuit Inspection

Disconnect the test harness and ECM 33P connector disconnected.

Check for continuity between the injector 2P connector of the wire harness side and ground.

Connection: Pink/Blue – Ground

Is there continuity?

YES – Short circuit in Pink/Blue wire

NO – Replace the ECM with a known good one, and recheck; refer to Key Registration Procedures (page 23-4)

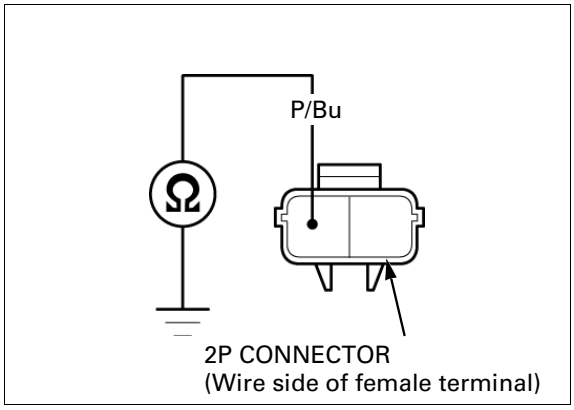

MIL 21 BLINKS (O_2 SENSOR)

- Before starting the inspection, check for loose or poor contact on the O_2 sensor cap connector and recheck the MIL blinking.

1. O_2 Sensor Open Circuit Inspection

Turn the ignition switch OFF.

Connect the test harness to the ECM 33P connector (page 6-14).
Disconnect the O_2 sensor cap connector.

Check the continuity between the test harness terminal and the O_2 sensor connector terminal of the wire harness side.

Connection: A3 – Black/Orange

Is there continuity?

YES – GO TO STEP 2.

NO – Open circuit in Black/Orange wire

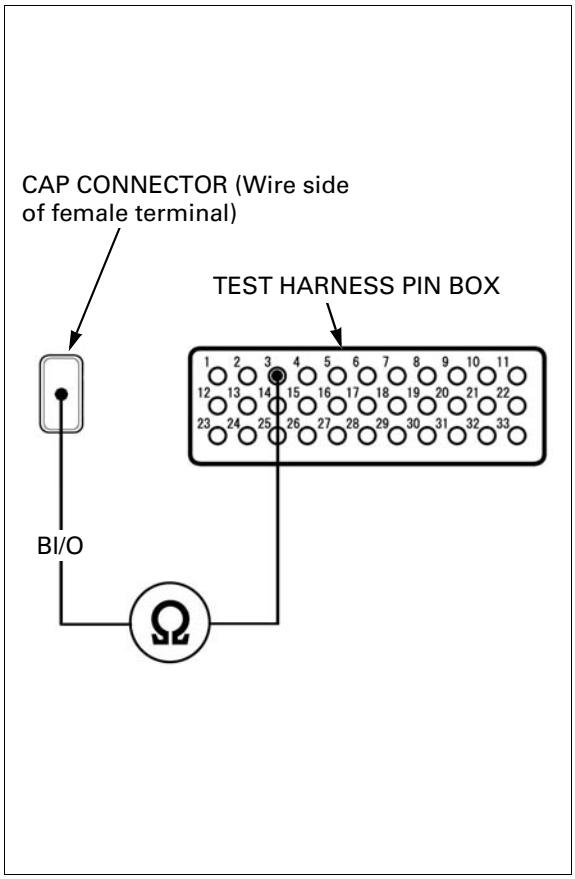

2. O_2 Sensor Short Circuit Inspection

Disconnect the test harness and ECM 33P connector disconnected.

Check for continuity between the O_2 connector terminal and ground.

Connection: Black/Orange – Ground

Is there continuity?

YES – Short circuit in the Black/Orange wire

NO – GO TO STEP 3.

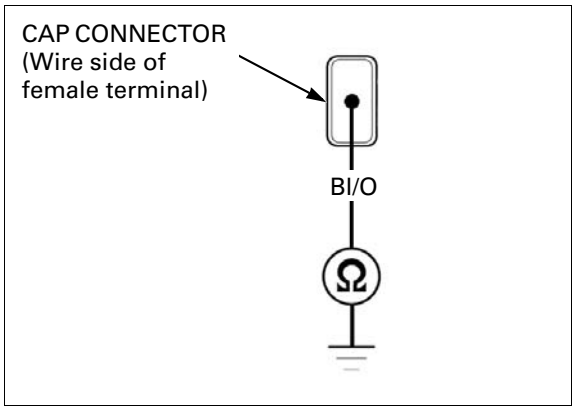

3. O_2 Sensor Inspection

Replace the O_2 sensor with a known good one (page 6-76).

Clear the DTC (page 6-13).

Start the engine and warm it up until the coolant temperature is 80 °C (176 °F).

Test-ride the scooter.
Stop the engine.
Read the DTC (page 6-12) and check that the MIL blinks.

Is the MIL 21 blinks?

YES – Replace the ECM with a new one and recheck

NO – Faulty original O_2 sensor

MIL 29 BLINKS (IACV)

- Before starting the inspection, check for loose or poor contact on the IACV 4P connector and recheck the MIL blinking.

1. IACV Short Circuit Inspection

Turn the ignition switch OFF.

Disconnect the IACV 4P connector.
Check the connector for loose contacts or corroded terminals.

Check for continuities between the IACV 4P connector of the wire harness side and ground.

Connection: Light green – Ground
Brown – Ground
Gray/Red – Ground
Black/Red – Ground

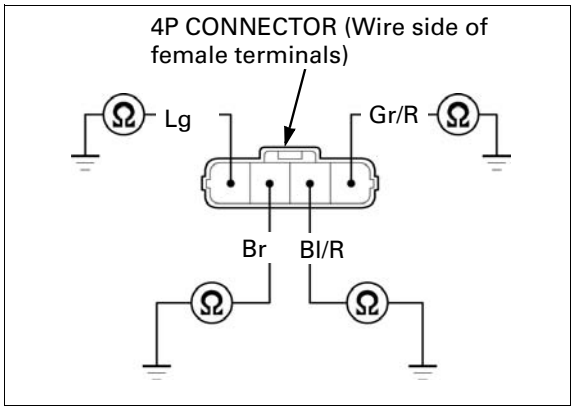

Are there continuities?

YES –
- Short circuit in Light green or Brown wire
- Short circuit in Gray/Red or Black/red wire

NO – GO TO STEP 2.

2. IACV Circuit Continuity Inspection

Connect the ECM test harness to ECM connector. Check the continuities between the test harness and the IACV 4P connector.

Connection: A21 – Light green
A20 – Brown
A32 – Gray/Red
A31 – Black/Red

Are there continuities?

YES – GO TO STEP 3.

NO – • Open circuit in Light green or Brown wire
• Open circuit in Gray/Red or Black/red wire

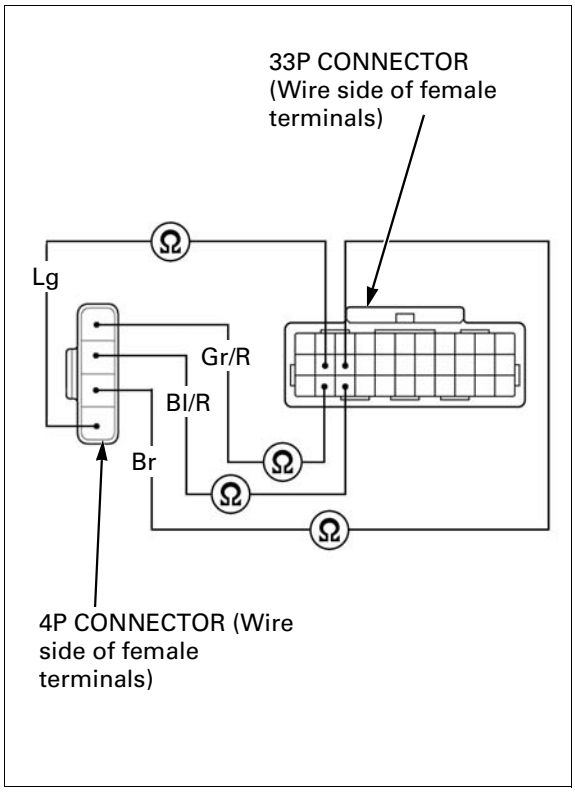

3. IACV Resistance Inspection

Measure the resistance at the IACV 4P connector terminals.

Connection: A – D
B – C

STANDARD: 110 – 150 Ω (20 °C/68 °F)

Is the resistance within 110 – 150 Ω (20°C/68°F)?

YES – GO TO STEP 4.

NO – Faulty IACV. Replace the IACV with a new one, and recheck.

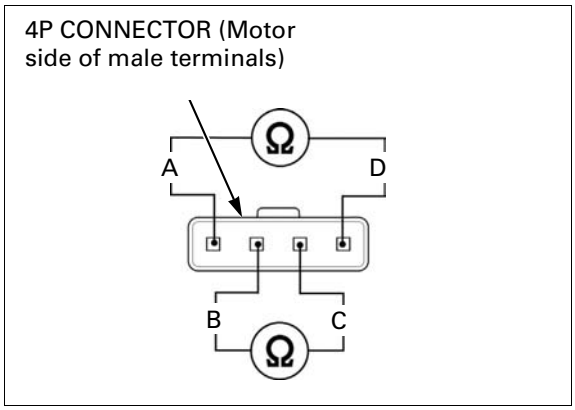

4. IACV Short Circuit Inspection

Check for continuity at the IACV 4P connector terminals of the IACV side.

Connection: A – B
C – D

STANDARD: No continuity

Is there continuity?

YES – Faulty IACV. Replace the IACV with a new one, and recheck.

NO – Replace the ECM with new one, and recheck; refer to Key Registration Procedures (page 23-4)

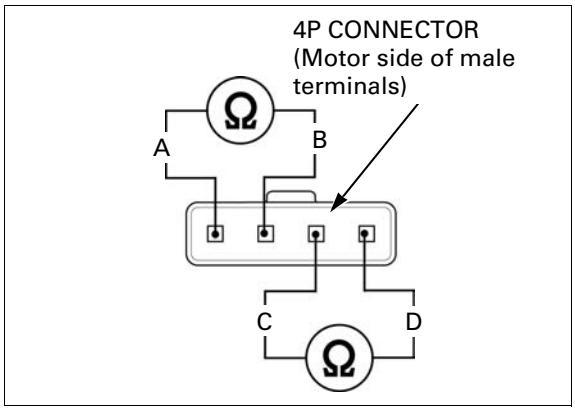

MIL CIRCUIT INSPECTION

When The Ignition Switch "ON", The MIL Does Not Come On

Turn the ignition switch "OFF".

Remove the rear fender A (page 3-7).

Disconnect the ECM 33P connector.

Ground the ECM 33P connector terminal of the wire harness side connector with a jumper wire.

CONNECTION: No.18 (Blue/Yellow) – Ground

TOOL:
Test probe **07ZAJ-RDJA110**

Turn the ignition switch "ON", the MIL should come on.

- If the MIL comes on, replace the ECM with a new one, and recheck.
  Refer to Key Registration Procedures (page 23-4).
- If the MIL does not come on, check for open circuit in the Blue/Yellow wire between the speedometer and ECM.
  If the wire is OK, replace the meter assembly of the speedometer.

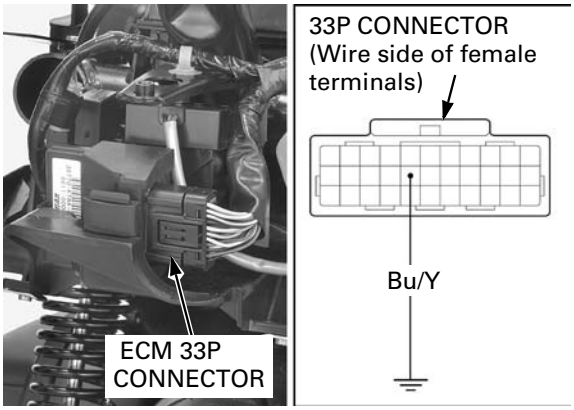

When The Ignition Switch "ON", The MIL Does Not Go Off Within A Few Seconds (Engine starts)

Turn the ignition switch "OFF".

Remove the rear fender A (page 3-7).

Disconnect the ECM 33P connector.

Turn the ignition switch "ON", the MIL should turn off.

- If the MIL comes on, check for short circuit in the Blue/Yellow wire between the speedometer and ECM.
  If the wire is OK, replace the meter assembly of the speedometer.
- If the MIL turns off, check the following.

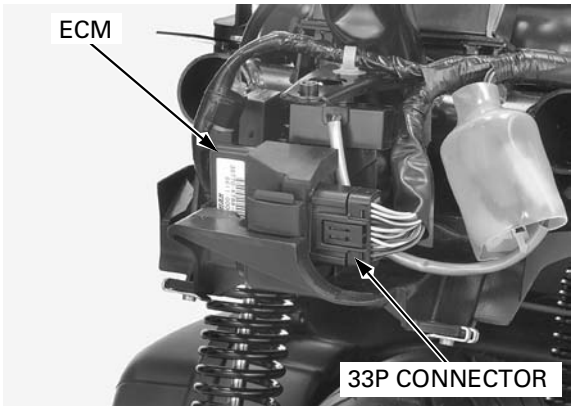

Check for continuity between the ECM connector and ground.

CONNECTION: No.15 (Brown) – Ground
STANDARD: No continuity

TOOL:
Test probe **07ZAJ-RDJA110**

- If there is continuity, check for short circuit in the Brown wire between the DLC and ECM.
- If there is no continuity, replace the ECM with a new one, and recheck.
  Refer to Key Registration Procedures (page 23-4).

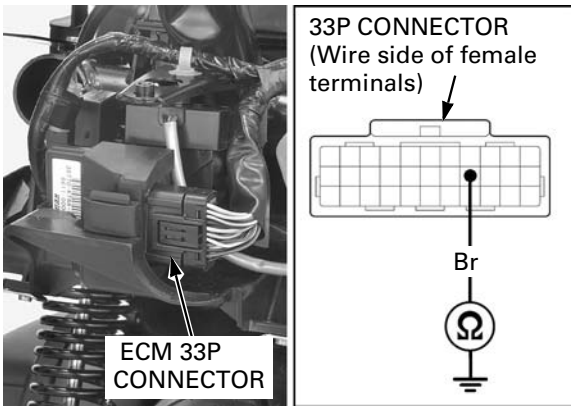

FUEL LINE INSPECTION

FUEL PRESSURE RELIEVING/QUICK CONNECT FITTING REMOVAL

- Before disconnecting fuel hose, relieve pressure from the system as following procedures.

1. Turn the ignition switch "OFF".

   Remove the luggage box (page 3-5).

   Disconnect the fuel pump 5P connector.
2. Turn the ignition switch "ON".
3. Start the engine, and let it idle until the engine stalls.
4. Turn the ignition switch "OFF".

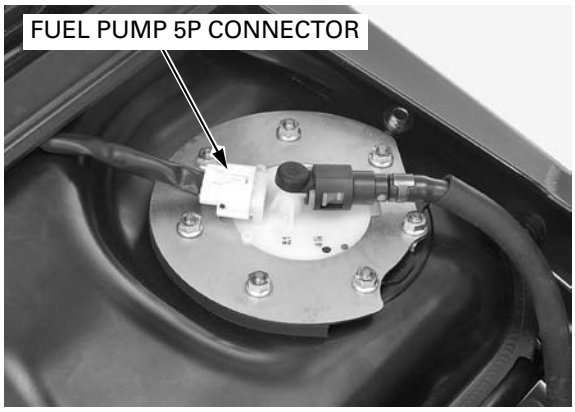

5. Check the fuel quick connect fitting for dirt, and clean if necessary.

   Place a shop towel over the quick connect fitting.

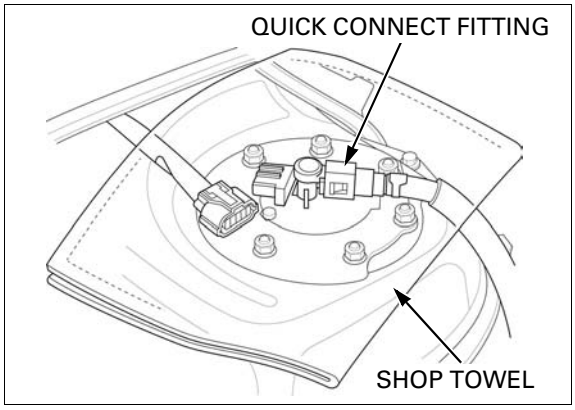

6. Pull the rubber off the fuel feed pipe.

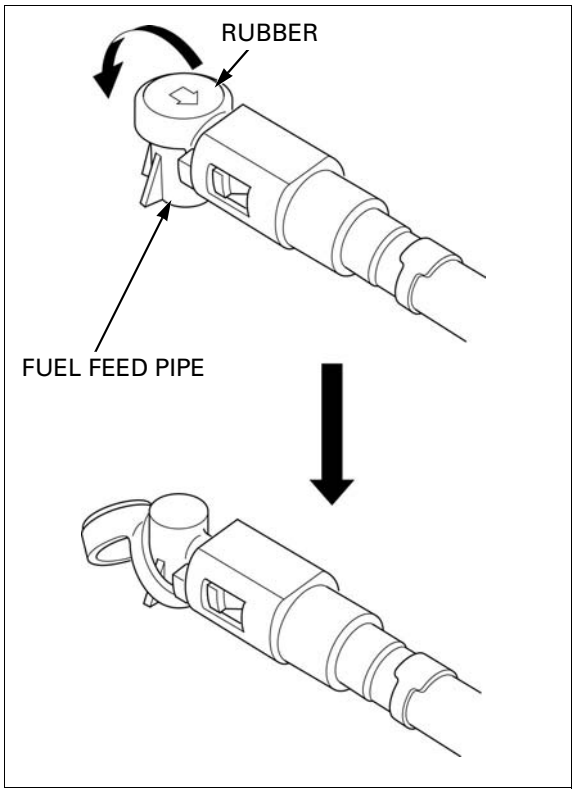

7. Hold the connector with one hand and squeeze the retainer tabs with the other hand and release them from the locking pawls.
   Pull the connector off.

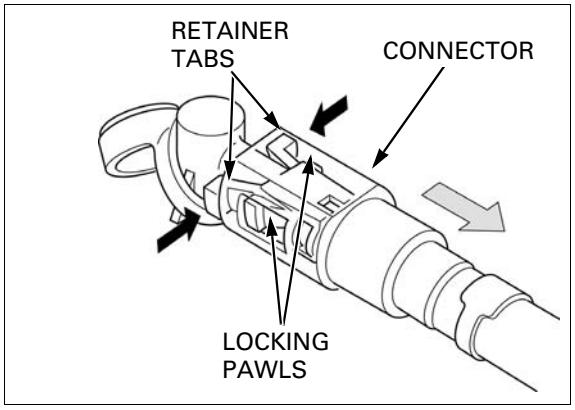

- Prevent the remaining fuel in the fuel hose from flowing out using a shop towel.
- Be careful not to damage the hose or other parts.
- Retainer tabs can be released by hand. Do not use tools such as screwdrivers or pliers as they could damage the tabs and joint.
- If the connector does not move, keep the retainer tabs pressed down, and alternately pull and push the connector until it comes off easily.

8. To prevent damage and keep foreign matter out, cover the disconnected connector and pipe end with the plastic bags.

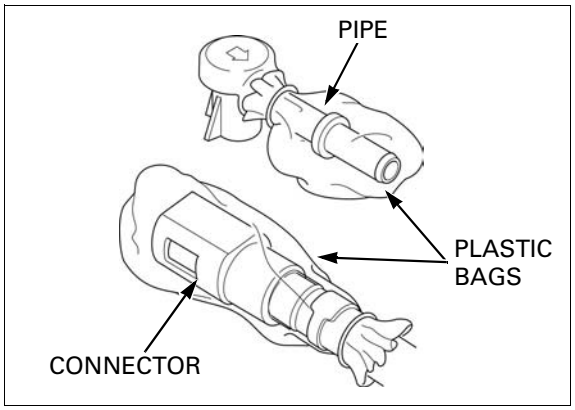

QUICK CONNECT FITTING INSTALLATION

- Always replace the retainer of the quick connect fitting when the fuel hose is disconnected.
- If any retainer needs replacing, use the same manufacturer's retainer as the ones being removed (The several manufacturers feature different retainer specifications).
- If there is cut or any other damage on the rubber, replace it with a new one.
- Do not bend or twist fuel feed hose.

1. Insert a new retainer into the connector.

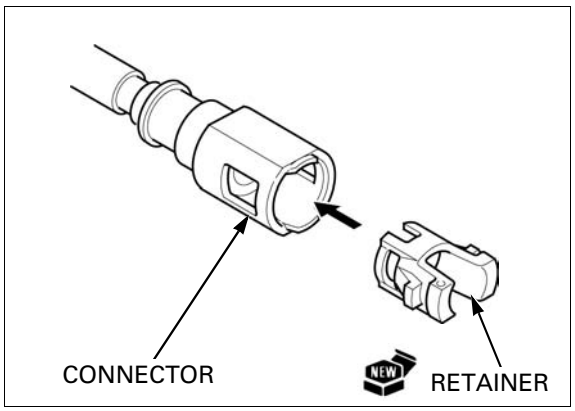

2. Clean around the pipe and set the rubber correctly.

Do not bend or twist fuel hose.

Align the quick connect fitting with the pipe and align the retainer locking pawls with the connector grooves.
Then press the quick connect fitting onto the pipe until both retainer pawls lock with a "CLICK".

If it is hard to connect, put a small amount of engine oil on the pipe end.

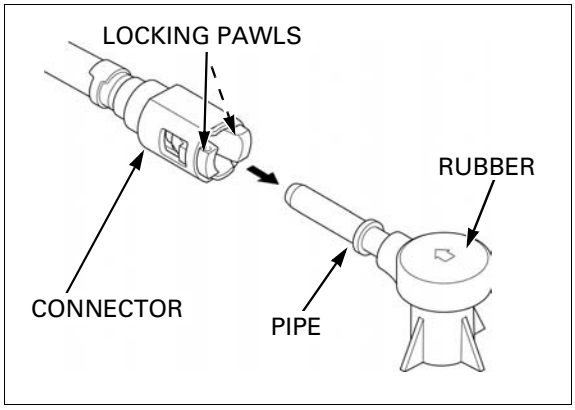

3. Make sure the connection is secure and that the pawls are firmly locked into place; check visually and by pulling the connector.

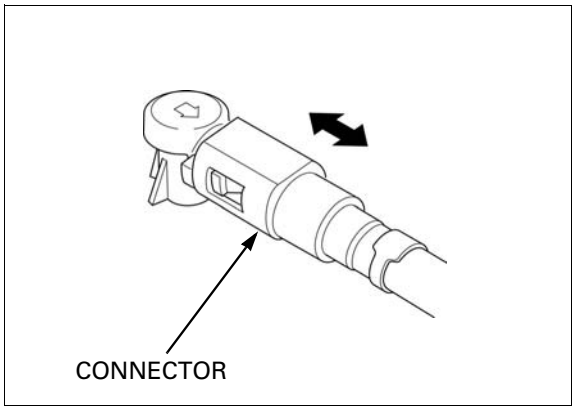

4. Connect the fuel pump 5P connector.

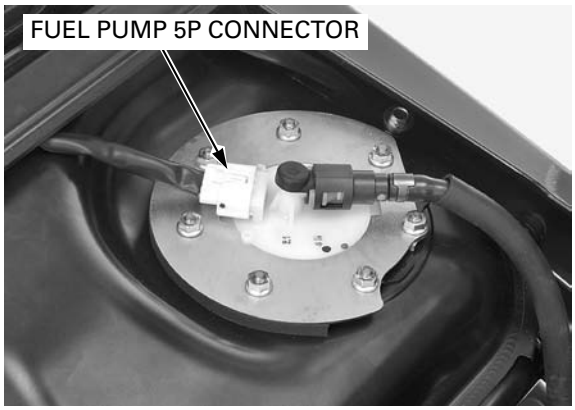

Do not start the engine.

5. Turn the ignition switch "ON".

The fuel pump will run for about 2 seconds, and fuel pressure will rise.
Repeat 2 or 3 times, and check that there is no leakage in the fuel supply system.

Install the luggage box (page 3-5).

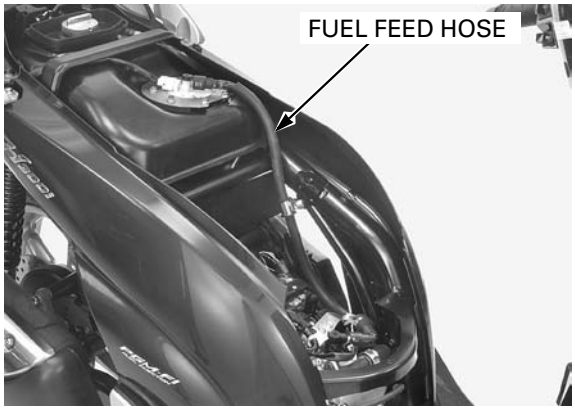

FUEL PRESSURE TEST

Relieve the fuel pressure and disconnect the quick connect fitting (page 6-44).

Remove the bolt from the fuel feed hose clamp.

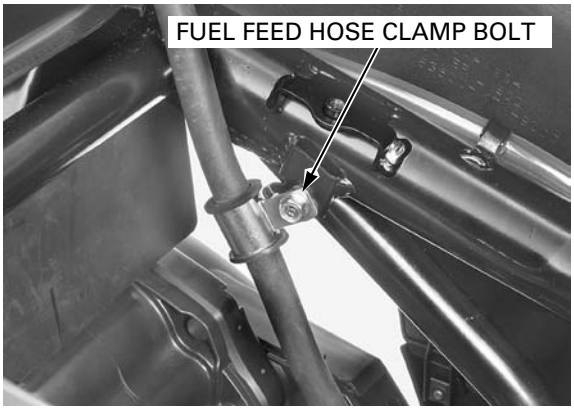

Attach the fuel pressure gauge set and pressure gauge.

TOOLS:

Fuel pressure gauge	**07406-0040004**
Pressure gauge manifold	**07ZAJ-S5A0111**
Fuel attachment hose	**07ZAJ-S5A0120**

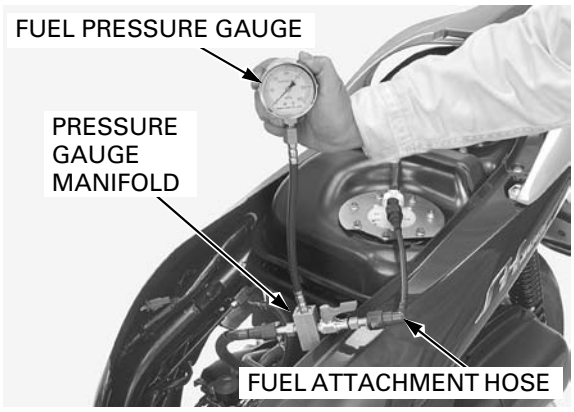

Start the engine and let it idle.

Read the fuel pressure.

STANDARD: 294 kPa (3.0 kgf/cm^2, 43 psi)

If the fuel pressure is higher than specified, replace the fuel pump assembly.

If the fuel pressure is lower than specified, inspect the following:

- Fuel line leaking
- Fuel pump (page 6-48)
- Clogged fuel filter (Assembly of the fuel pump)

After inspection, relieve the fuel pressure by starting the engine and let it idle until it stalls.

Wrap a shop towel around the attachment to soak up any spilled fuel.

Remove the fuel pressure gauge, attachment and manifold from the fuel pump.

Connect the quick connect fitting (page 6-45).

FUEL FLOW INSPECTION

Relieve the fuel pressure and disconnect the quick connect fitting (page 6-44).

Turn the ignition switch "OFF".

Connect the fuel attachment hose to the fuel pump joint.

TOOL:
Fuel attachment hose **07ZAJ-S5A0120**

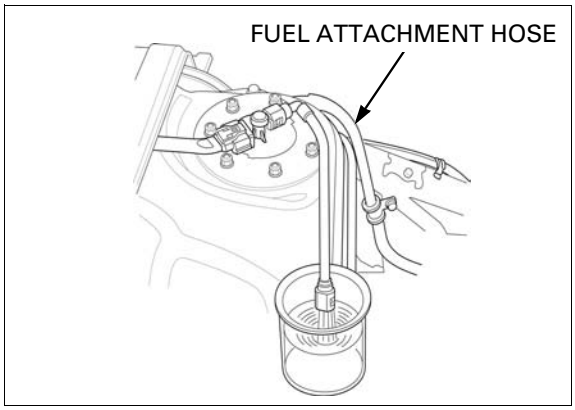

Wipe off spilled out gasoline.

Place the end of the hose into an approved gasoline container.

Turn the ignition switch "ON" and measure the amount of fuel flow.

- The fuel pump operates for 2 seconds. Repeat 5 times to meet the total measuring time.

Amount of fuel pump flow:
33.3 cm³ (1.1 US oz, 1.2 Imp oz) minimum/ 10 seconds

If the fuel flow is less than specified, inspect the following:

– Fuel pump (page 6-48).
– Clogged fuel filter (Assembly of the fuel pump)

Connect the quick connect fitting (page 6-45).

FUEL PUMP

SYSTEM INSPECTION

Turn the ignition switch "ON" and confirm that the fuel pump operates for a few seconds.
If the fuel pump does not operate, inspect as follows:

Turn the ignition switch "OFF".

Remove the luggage box (page 6-45).

Disconnect the fuel pump 5P connector.

Turn the ignition switch "ON" and measure the voltage at the terminals of the wire harness side.

CONNECTION: Brown (+) – Green (–)

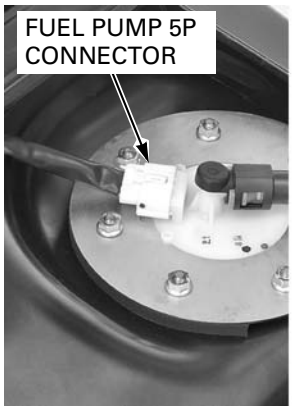

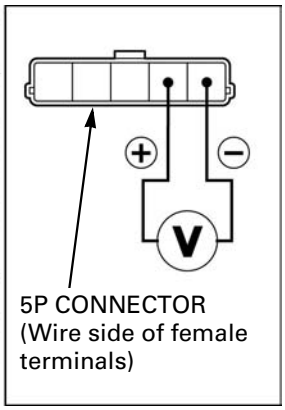

There should be battery voltage for a few seconds.

If there is battery voltage, replace the fuel pump.

If there is no battery voltage, inspect the following:

- Open circuit in Green wire between the fuel pump and ground
- Fuel pump relay (page 6-69)

REMOVAL

- It is impossible to disassemble the fuel pump after removing it.

Relieve the fuel pressure and disconnect the quick connect fitting (page 6-44).

Clean around the fuel pump.

Disconnect the fuel pump 5P connector.

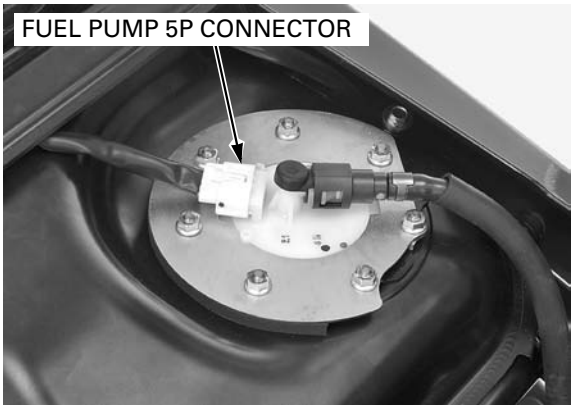

Remove the fuel pump mounting nuts.

Be careful not to damage the fuel level sensor.

Remove the set plate and fuel pump unit from the fuel tank.

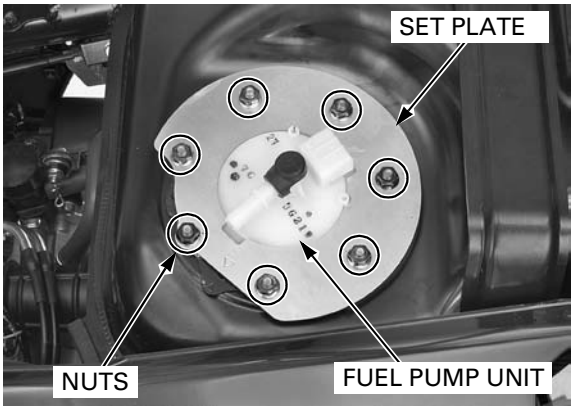

Remove the packing from the fuel pump unit.

INSPECTION

Check for fuel pump unit for wear or damage.

Check for fuel suction filter for wear or damage.

Replace the fuel pump unit if necessary.

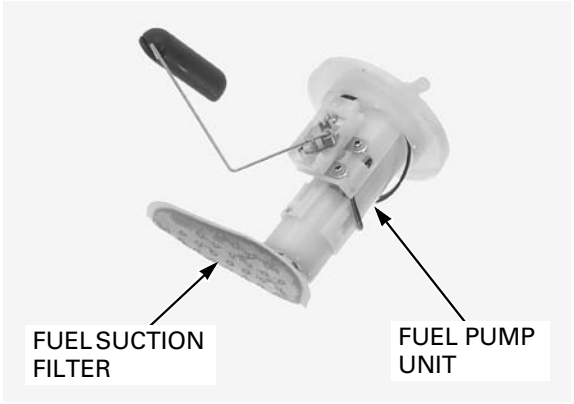

INSTALLATION

Always replace packing with a new one.

Place a new packing onto the fuel tank and apply less than 1.0 g of engine oil to lip surface of the packing.

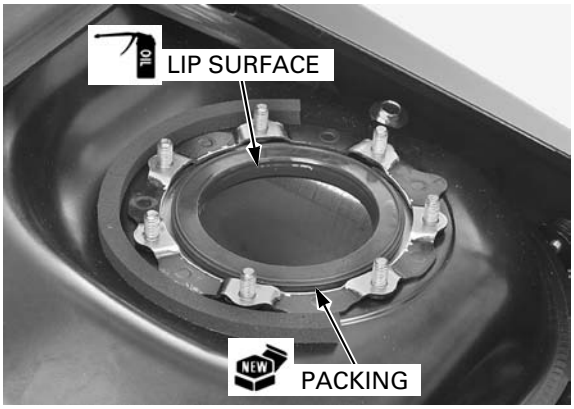

Install the fuel pump unit to the fuel tank.

- Be careful not to damage the fuel level sensor when installing the fuel pump unit.
- Be careful not to allow the dirt and debris between the fuel pump and packing.

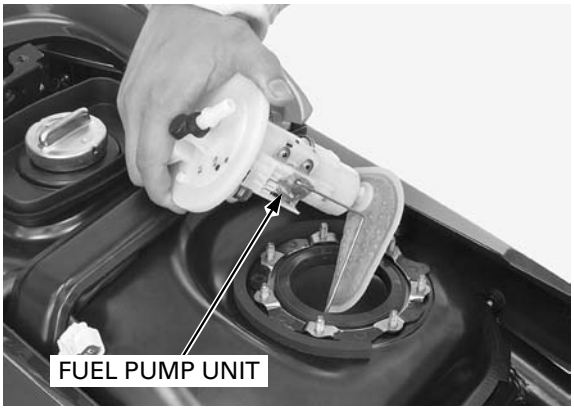

Install the set plate by aligning the allow marks and its holes with the tabs on the fuel pump unit.

- Be careful not to damage the pipe end when installing the set plate.

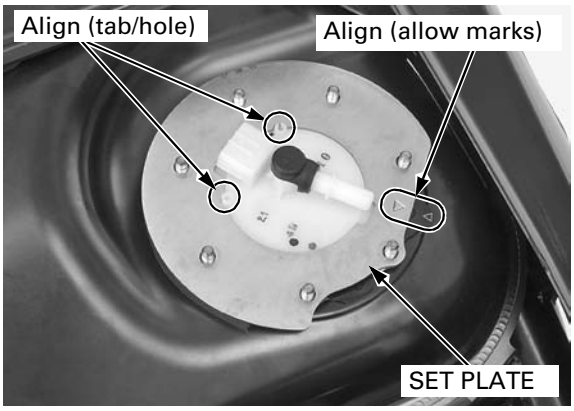

Install and tighten the fuel pump mounting nuts in the sequence shown.

TORQUE: 12 N·m (1.2 kgf·m, 9 lbf·ft)

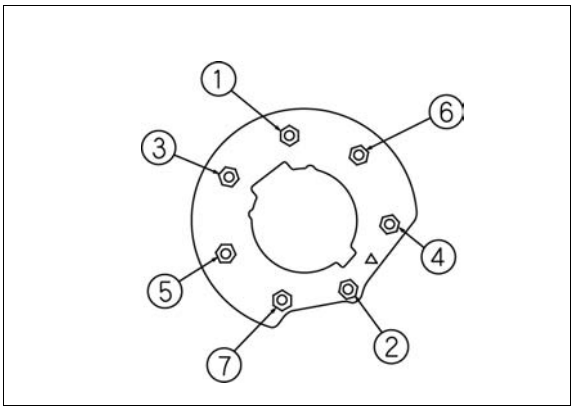

Connect the fuel pump 5P connector.

Connect the quick connect fitting (page 6-45).

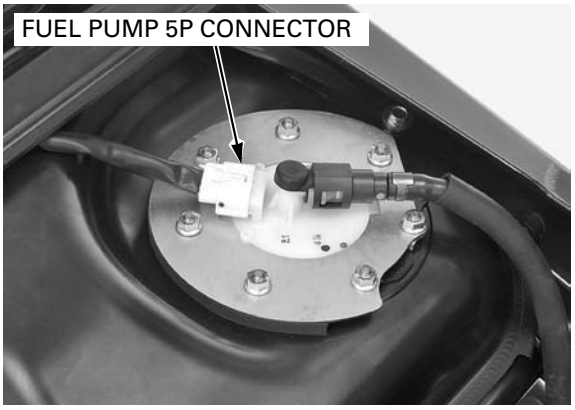

FUEL TANK

REMOVAL/INSTALLATION

Remove the body cover (page 3-6).

Relieve the fuel pressure and disconnect the quick connect fitting (page 6-44).

Disconnect the fuel pump 5P connector.

Disconnect the fuel tray drain hose.
Remove the bolts and frame plate.
Remove the four mounting washer bolts and fuel tank.

Installation is in the reverse order of removal.

TORQUE: Fuel tank mounting washer bolt
12 N·m (1.2 kgf·m, 9 lbf·ft)

- Route the fuel tank tray drain hose properly, not to be kinked or bound.
- Connect the quick connect fitting (page 6-45).

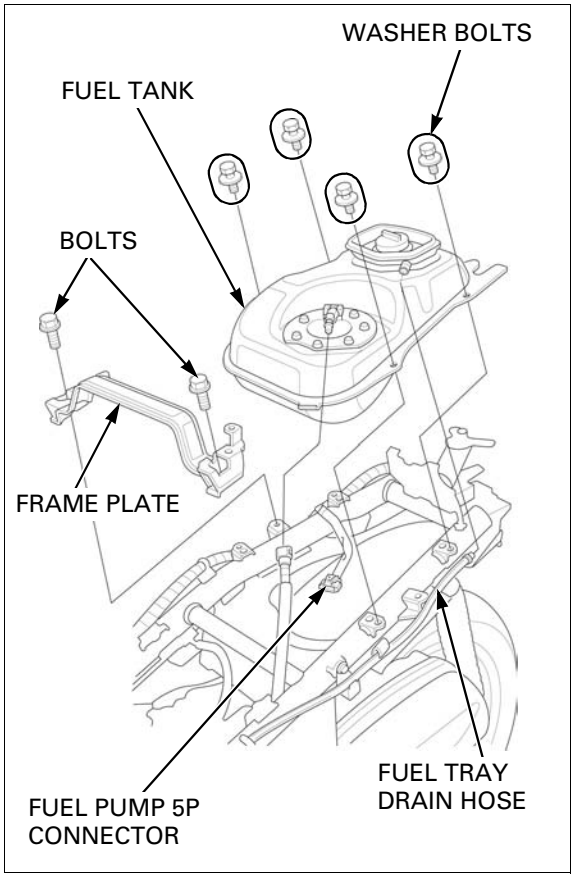

AIR CLEANER HOUSING

REMOVAL/INSTALLATION

Remove the luggage box (page 3-5).

Remove the washer bolts and ignition coil cover.

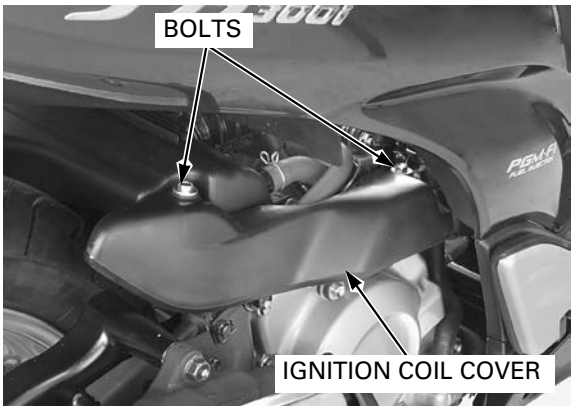

Disconnect the following hoses from the air cleaner housing:

- Crankcase breather hose
- PAIR air suction hose

Remove the mounting washer bolt from the air cleaner housing.

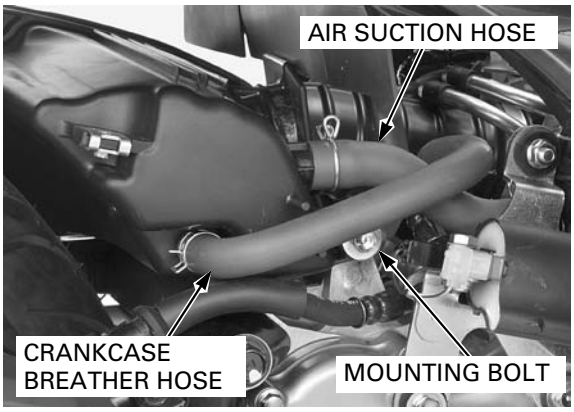

Disconnect the final reduction case breather hose from the air cleaner housing.

Remove the two mounting washer bolts from the air cleaner housing.

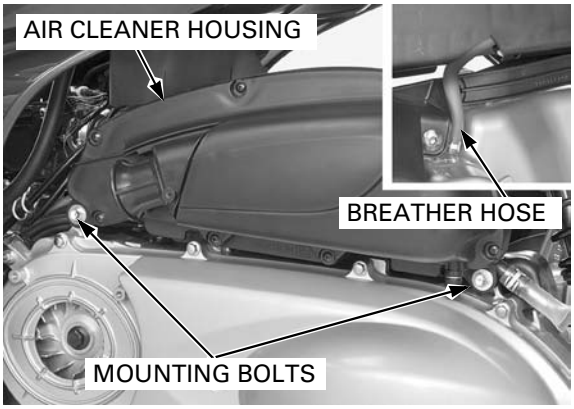

Loosen the connecting hose band screw and disconnect the connecting hose from the throttle body. Remove the air cleaner housing.

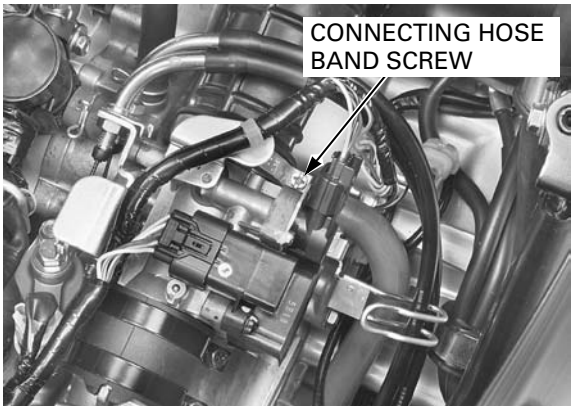

Route the hoses properly (page 1-19).

Installation is in the reverse order of removal.

TORQUE: Air cleaner housing mounting washer bolt 11 N·m (1.1 kgf·m, 8 lbf·ft)

- Tighten the connecting hose band screw until the clearance between the screw and band end is 7.0 ± 1.0 mm (0.28 ± 0.04 in)

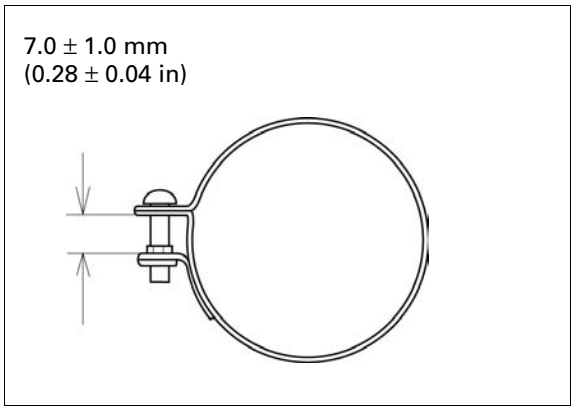

THROTTLE BODY

REMOVAL

- If the sensor unit has been removed, perform the TP sensor reset procedure (page 6-58).

Remove the luggage box (page 3-5).

Disconnect the sensor unit 5P (Black) connector and IACV 4P connector.

Release the wire clamp boss from the throttle body.

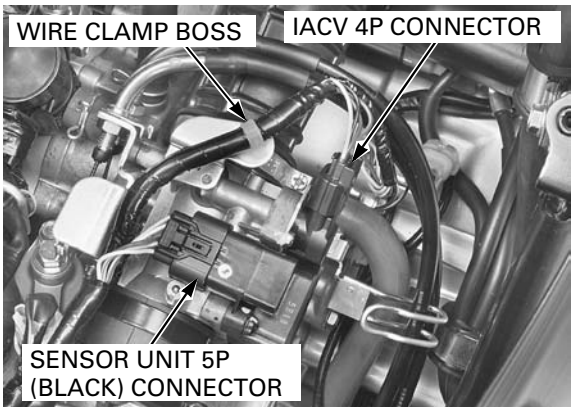

Loosen the throttle cable lock nuts.

Be careful not to damage the threads of throttle cable.

Release the throttle cable from the cable bracket.

Disconnect the throttle cables from the throttle drum.

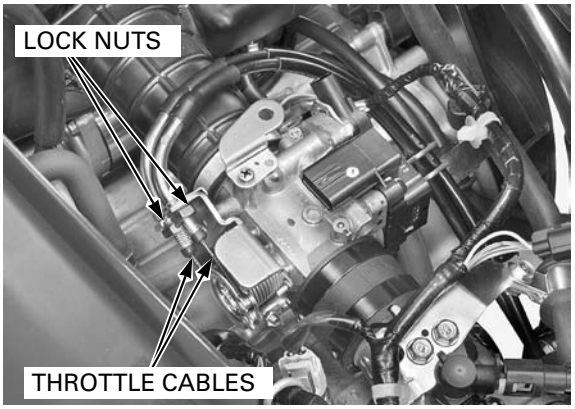

Loosen the connecting hose band screw and insulator band screw.

Remove the throttle body.

- Seal the intake pipe with a shop towel or cover it with a piece of tape to prevent any foreign material from dropping into the engine.

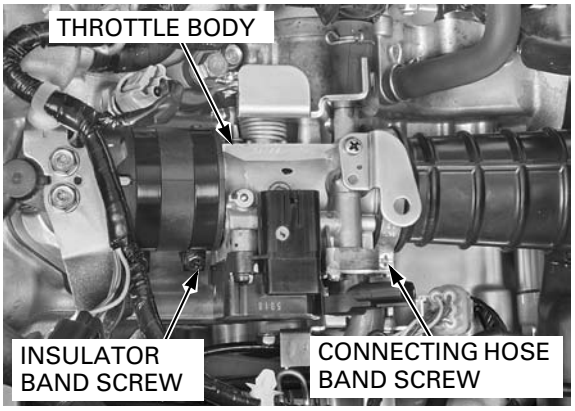

DISASSEMBLY

- The throttle body is factory pre-set. Do not disassemble in a way other than shown in this manual.
- Do not snap the throttle valve from full open to full close after the throttle cable has been removed. It may cause incorrect idle operation.
- Do not damage the throttle body. It may cause incorrect throttle valve operation.
- Do not loosen or tighten the white painted nut of the throttle drum. Loosening or tightening it can cause throttle body malfunction.

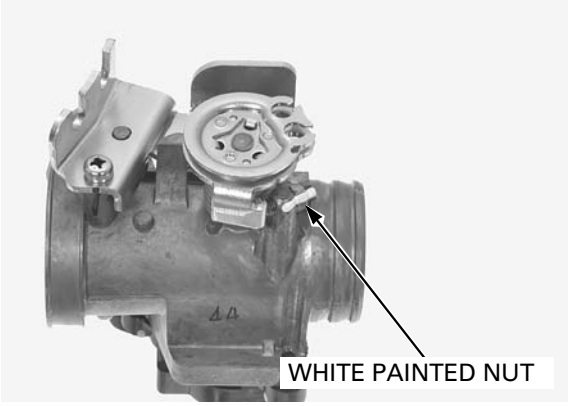

Remove the following:

– Torx screws
– Set plate
– IACV

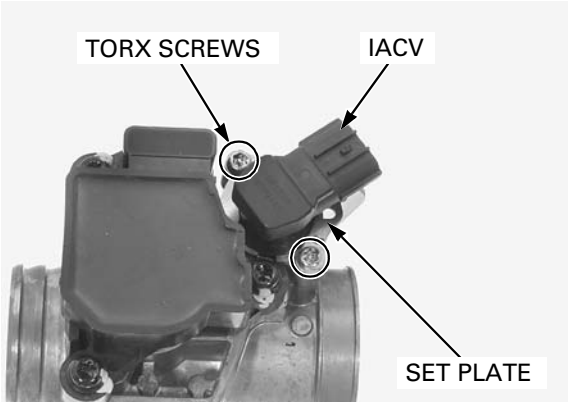

Remove the following:

– Torx screws
– Sensor unit
– O-ring

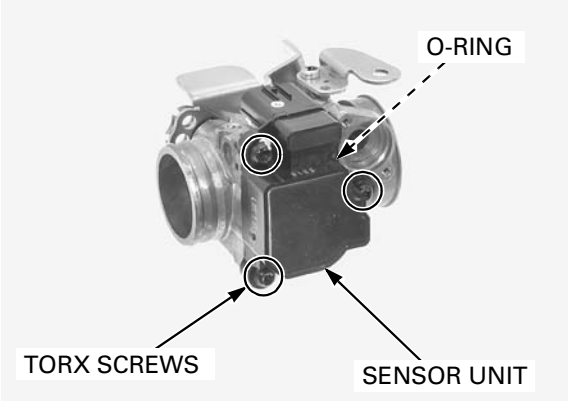

Blow open each air passage in the throttle body with the compressed air.

- Do not use high pressure air or bring the nozzle too close to the throttle body.

ASSEMBLY

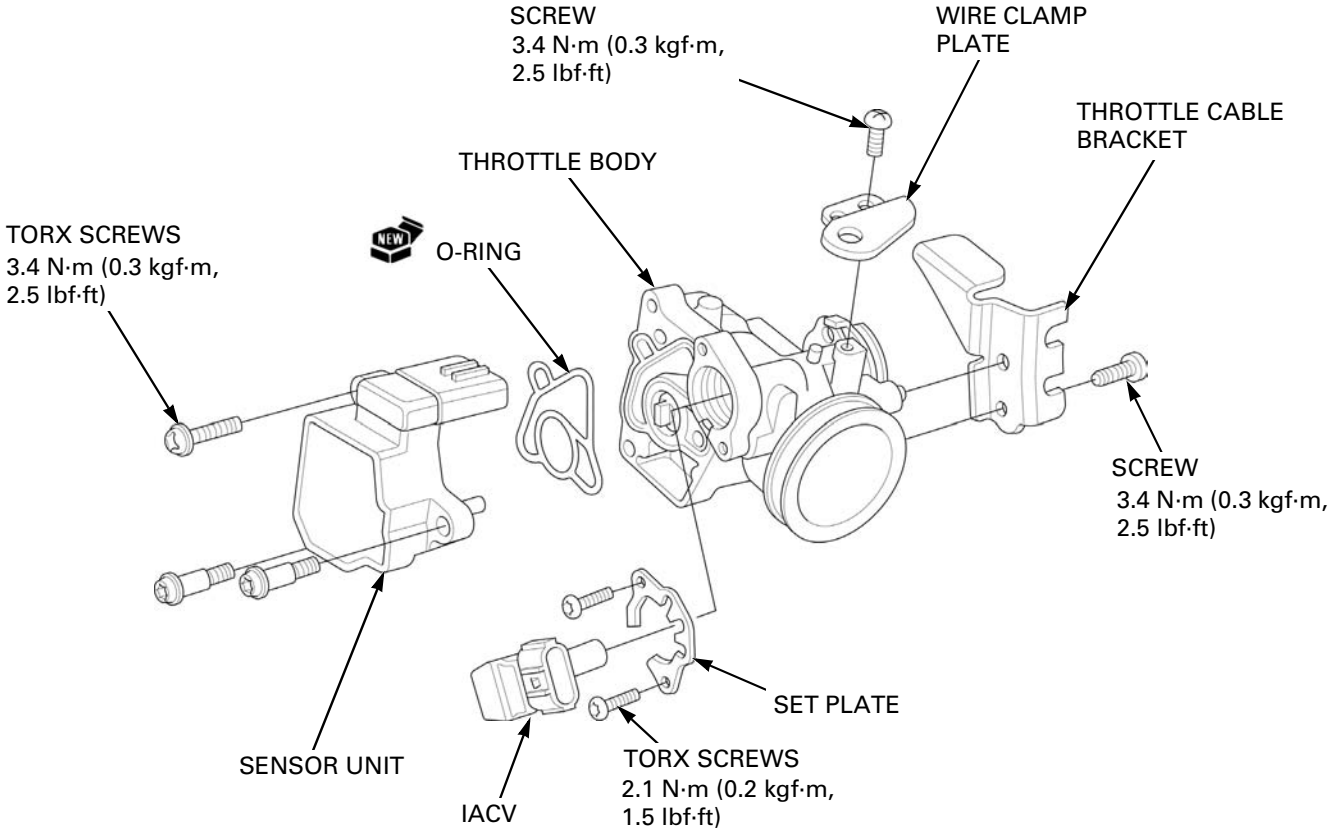

Install the new O-ring to the throttle body.

- Install the O-ring to the throttle body properly. If the O-ring is not installed properly, the idle air will leak and engine idle speed will be unstable.

Install the sensor unit to the throttle body by aligning the clip of the TP sensor and boss of the throttle valve.

- The light pressure is sufficient to assemble the sensor unit and throttle body in their correct position. If you cannot assemble them easily, the clip may be misaligned. Do not attempt to force them together and make sure that the clip is aligned.
- Perform the TP sensor reset procedure (page 6-58) after installing the sensor unit.

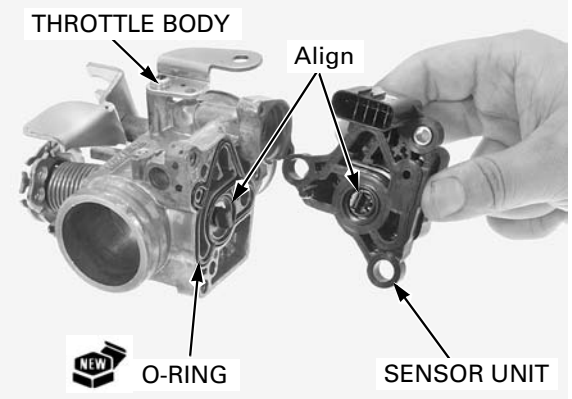

Install and tighten the torx screws to the specified torque.

TORQUE: 3.4 N·m (0.3 kgf·m, 2.5 lbf·ft)

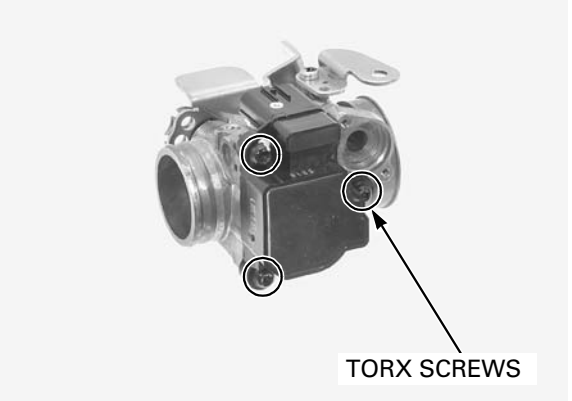

Turn the slide valve clockwise until lightly seated on IACV.

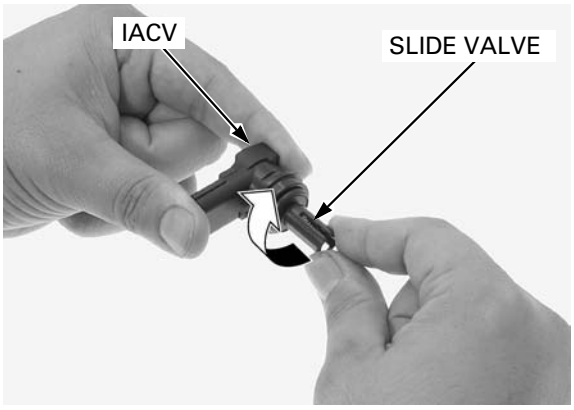

Install the IACV by aligning the pin with the slide valve slot.

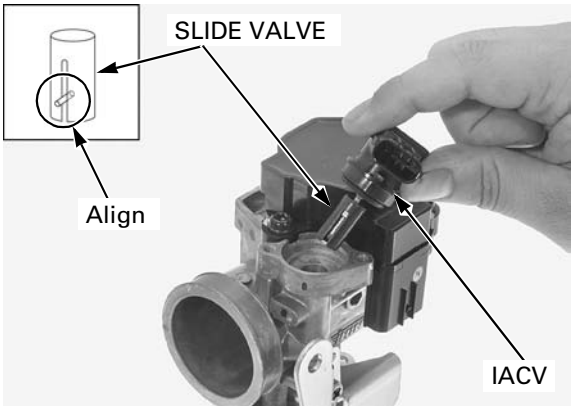

Install the set plate by aligning the tab of the IACV with the slot of set plate as shown.

Install and tighten the torx screws to the specified torque.

TORQUE: 2.1 N·m (0.2 kgf·m, 1.5 lbf·ft)

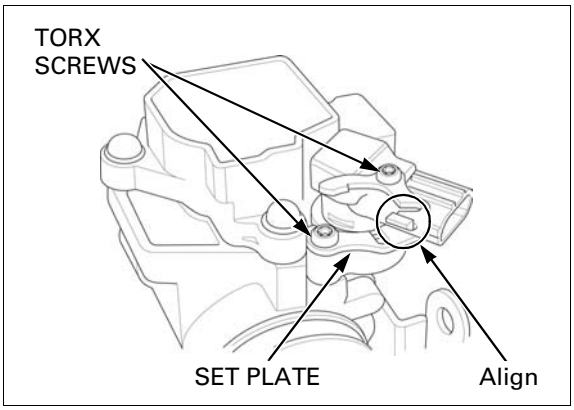

INSTALLATION

Install the throttle body between the connecting hose and insulator band by aligning the throttle body tab with insulator band groove.

Tighten the insulator band screw to the specified torque.

TORQUE: 5 N·m (0.5 kgf·m, 3.7 lbf·ft)

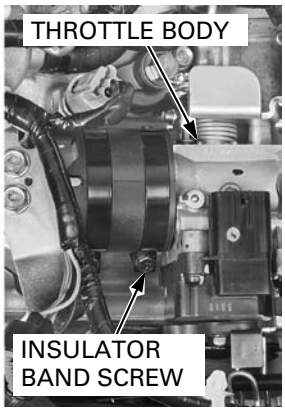

Tighten the connecting hose band screw until the clearance between the screw and band end is 7.0 ± 1.0 mm (0.28 ± 0.04 in).

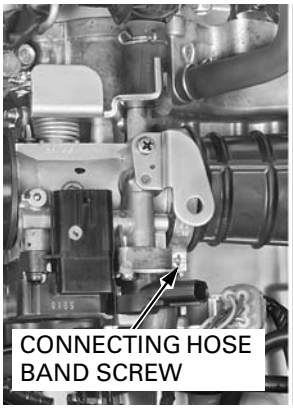

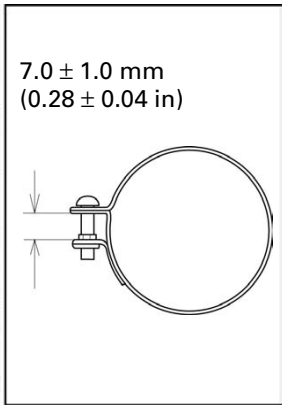

Be careful not to damage the threads of throttle cable.

Connect the throttle cable to the throttle drum and set the throttle cable onto the cable bracket, then adjust the throttle grip free play (page 4-5).

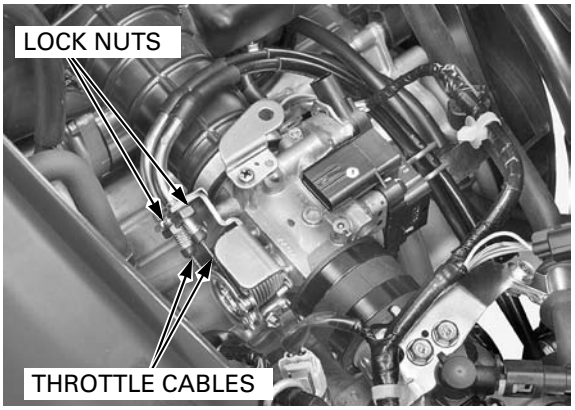

Connect the sensor unit 5P (Black) connector and IACV 4P connector.

Set the wire clamp boss from the throttle body.

Install the luggage box (page 3-5).

If the sensor unit has been removed, perform the TP sensor reset procedure (page 6-58).

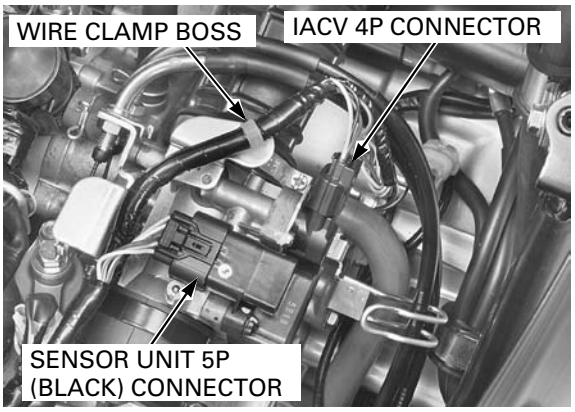

TP SENSOR RESET PROCEDURE

- Make sure that DTC is not stored in ECM. If the DTC is stored in ECM, TP sensor reset mode won't start by following the procedure below.

1. Remove the maintenance lid (page 3-4).
2. Turn the ignition switch "OFF".
3. Remove the dummy connector from the DLC.

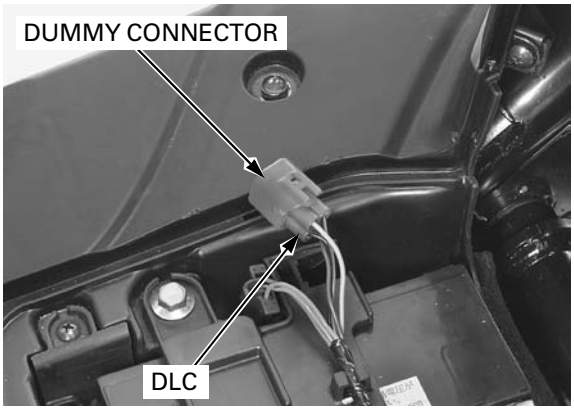

4. Connect the special tool to the DLC and short the DLC terminals.

   TOOL:
   SCS connector **070PZ-ZY30100**

   CONNECTION: Brown – Green/Black

5. Disconnect the ECT sensor 3P (Gray) connector.
   Short the ECT sensor terminals with jumper wire.

   CONNECTION: Pink/White – Green/Orange

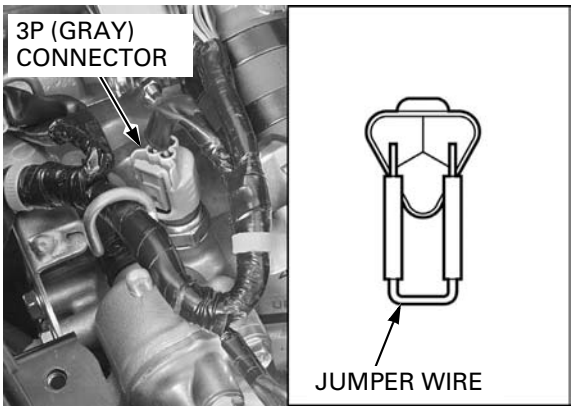

6. Turn the ignition switch "ON" then disconnect the jumper wire from the ECT sensor 3P (Gray) connector while the MIL is blinking (reset receiving pattern) for 10 seconds.

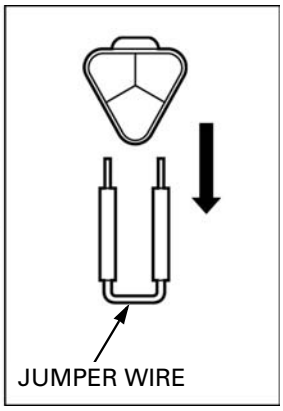

7. Check if the MIL blinks.

After disconnection of the jumper wire, the MIL should start blinking (successful pattern).

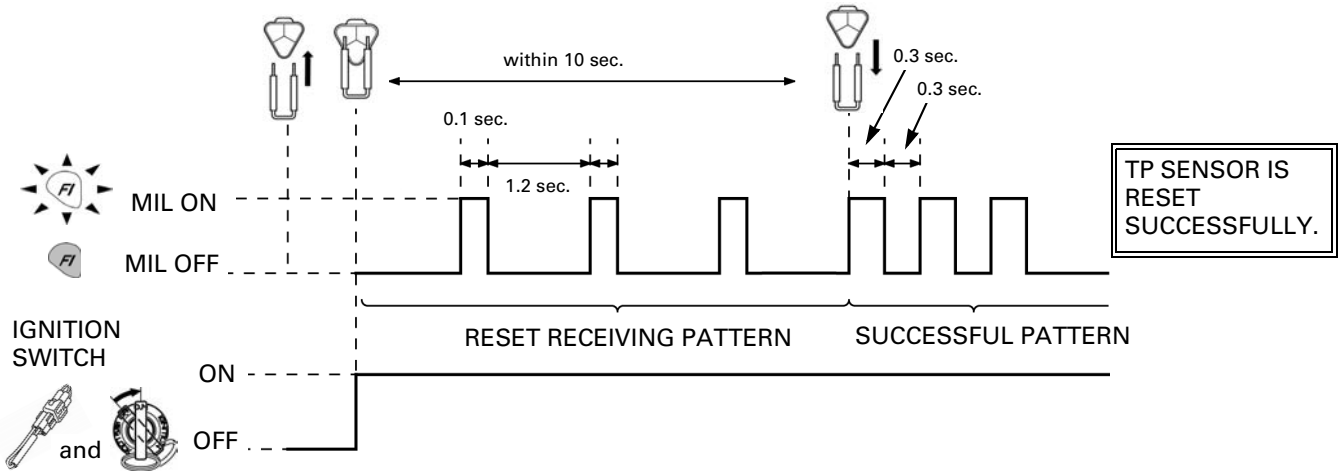

If the jumper wire is connected for more than 10 seconds, the MIL will stay ON (unsuccessful pattern). Try again from the step 4.

8. Turn the ignition switch "OFF".
9. Connect the ECT sensor (Gray) 3P connector.

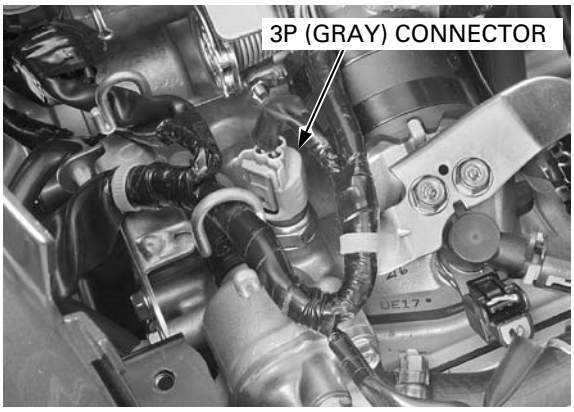

10. Disconnect the SCS connector from the DLC.

11. Install the dummy connector to the DLC.

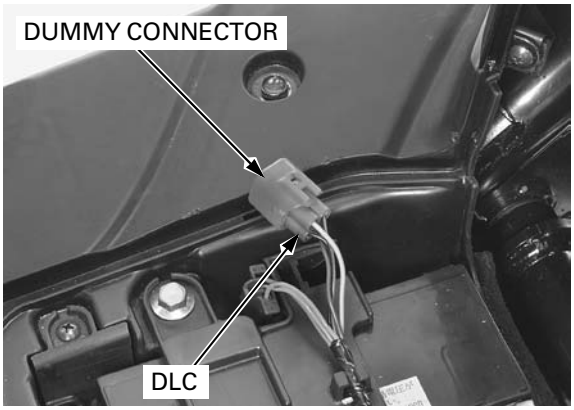

12. Support the scooter with its centerstand.

    Warm up the engine about ten minutes.

    Connect the tachometer and check the idle speed.

    ENGINE IDLE SPEED: 1,500 ± 100 min^{-1} (rpm)

    If the idle speed is out of the specification, check the following:

- Throttle operation and throttle grip free play (page 4-5).
- Intake air leak.
- IACV operation (page 6-77).

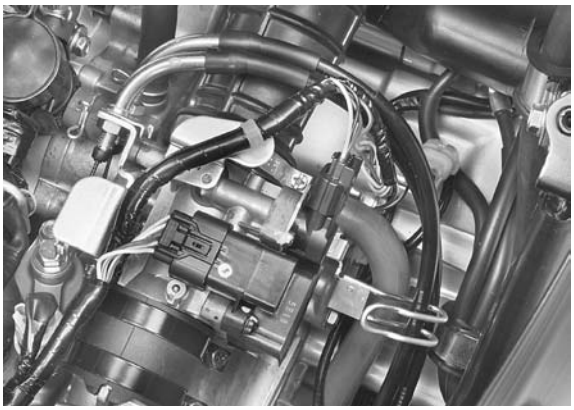

INJECTOR

REMOVAL

Relieve the fuel pressure and disconnect the quick connect fitting (page 6-44).

Disconnect the injector 2P connector.

Remove the fuel hose clamp bolt.

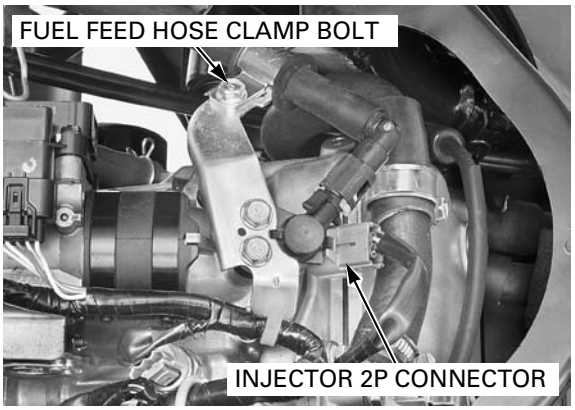

Before removal, clean around the injector.

Pull the rubber off the fuel feed pipe.

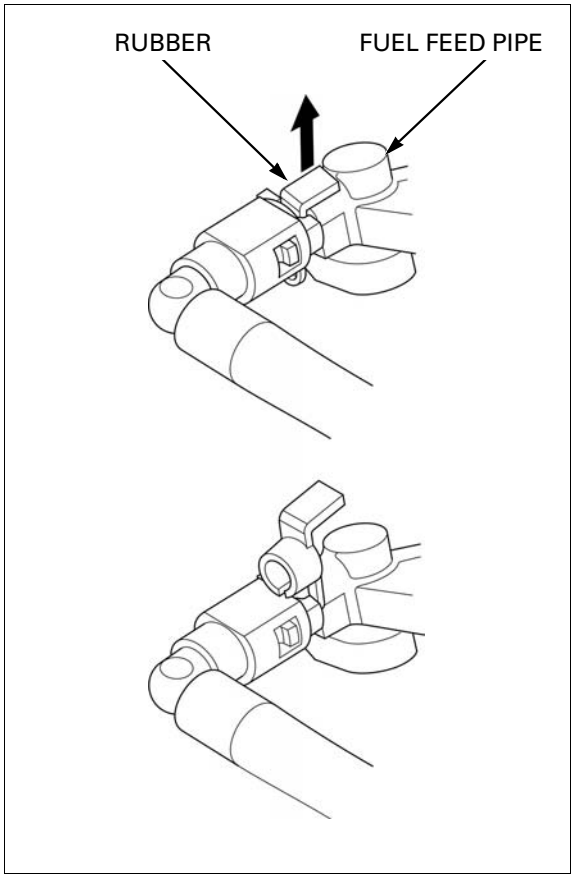

Hold the connector with one hand and squeeze the retainer tabs with the other hand and release them from the locking pawls.
Pull the connector off.

- Prevent the remaining fuel in the fuel hose from flowing out using a shop towel.
- Be careful not to damage the hose or other parts.
- Retainer tabs can be released by hand. Do not use tools such as screwdrivers or pliers as they could damage the tabs and joint.
- If the connector does not move, keep the retainer tabs pressed down, and alternately pull and push the connector until it comes off easily.

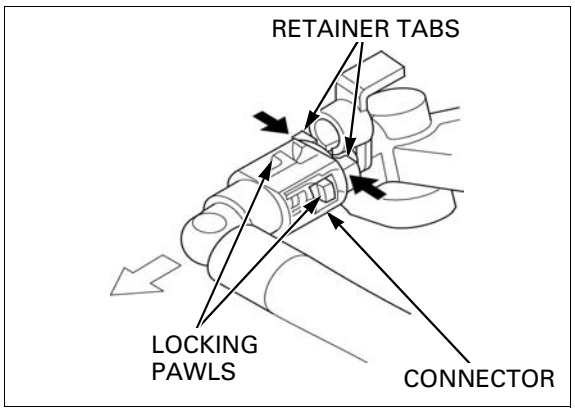

Remove the following:

- Bolts
- Fuel feed hose stay
- Fuel feed pipe/injector

Seal the injector port with a shop towel or cover it with a piece of tape to prevent any foreign material from dropping into the engine.

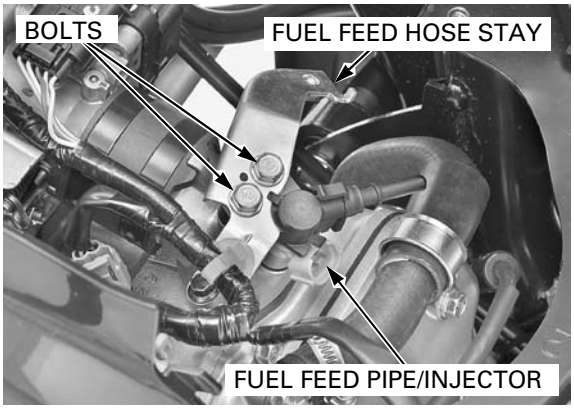

Remove the following:

- Fuel feed pipe
- O-ring
- Seal ring

To prevent damage and keep foreign matter out, cover the disconnected connector and pipe end with the plastic bags.

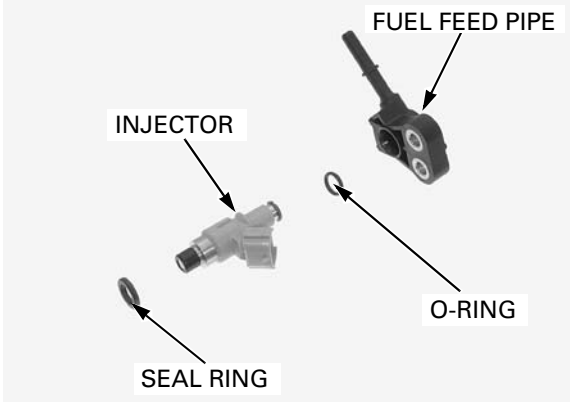

INSTALLATION

Coat the new O-ring and seal ring with engine oil.

Install the O-ring and seal ring to the injector.

- Replace the O-ring and seal ring with new ones as a set.
- Be careful not to damage the O-ring and seal ring.

Install the injector to the fuel feed pipe.

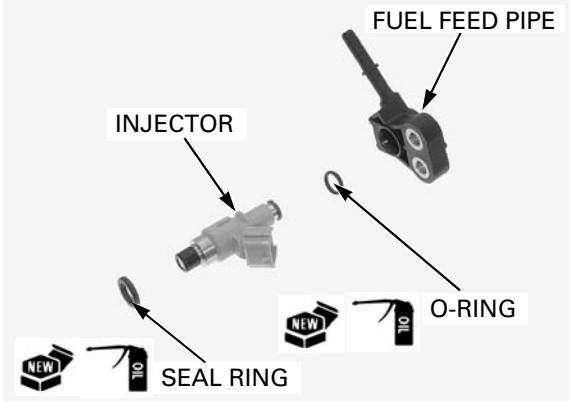

Install the fuel feed pipe/injector to the intake pipe.

NOTICE

Be careful not to allow dirt and debris between the intake pipe and seal ring.

Install the fuel feed hose stay and bolts.
Tighten the bolts.

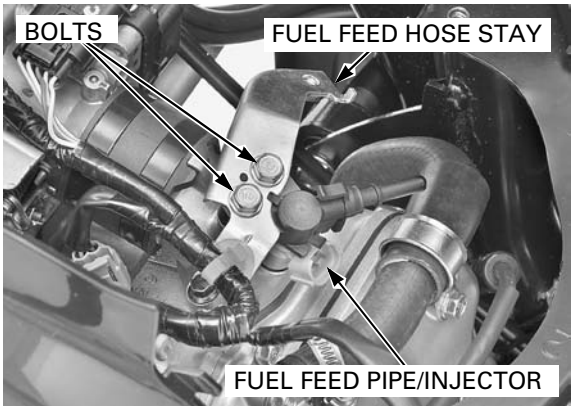

Insert a new retainer into the connector.

- Always replace the retainer of the quick connect fitting when the fuel hose is disconnected.
- If any retainer needs replacing, use the same manufacturer's retainer as the ones being removed (The several manufacturers feature different retainer specifications).

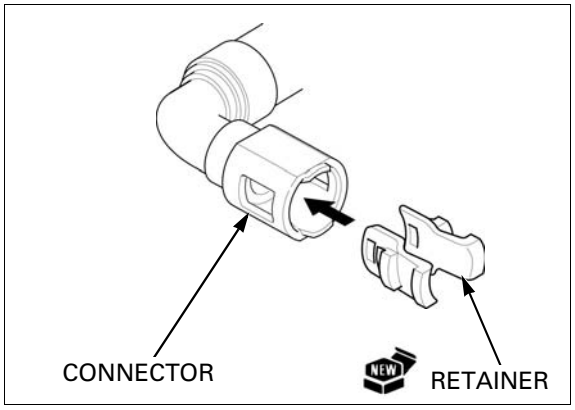

Clean around the pipe and set the rubber correctly.

Do not bend or twist fuel hose.

Align the quick connect fitting with the pipe and align the retainer locking pawls with the connector grooves.
Then press the quick connect fitting onto the pipe until both retainer pawls lock with a "CLICK".

If it is hard to connect, put a small amount of engine oil on the pipe end.

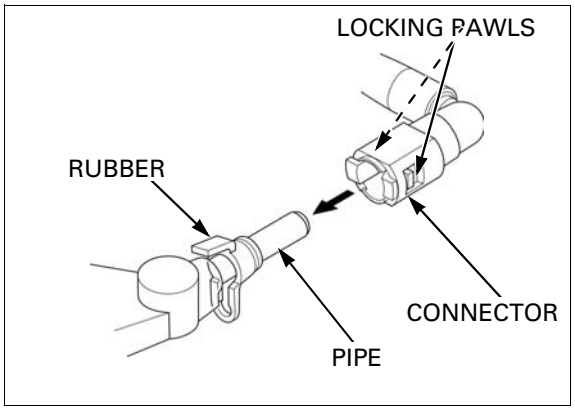

Make sure the connection is secure and that the pawls are firmly locked into place; check visually and by pulling the connector.

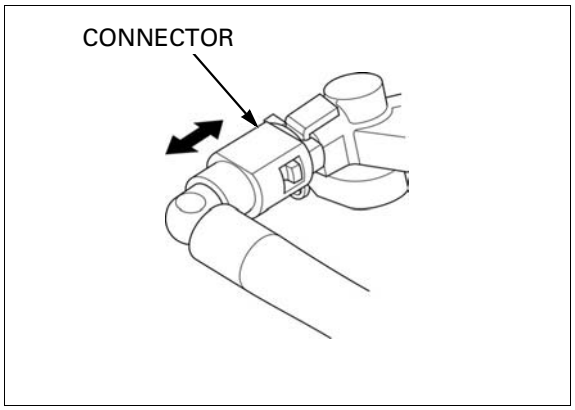

Set the fuel feed hose.
Install and tighten the fuel hose clamp bolt.

Connect the injector 2P connector by aligning the connector stopper with the tab on the fuel feed pipe. Connect the quick connect fitting of the fuel pump side (page 6-45).

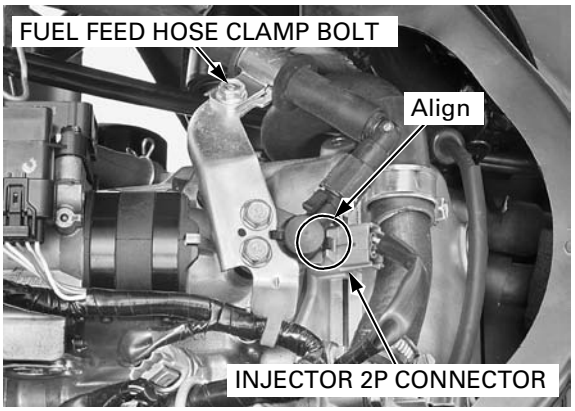

INTAKE PIPE

REMOVAL

Remove the injector (page 6-61).

Loosen the insulator band screw.

Remove the following:

- Intake pipe mounting bolts
- Intake pipe

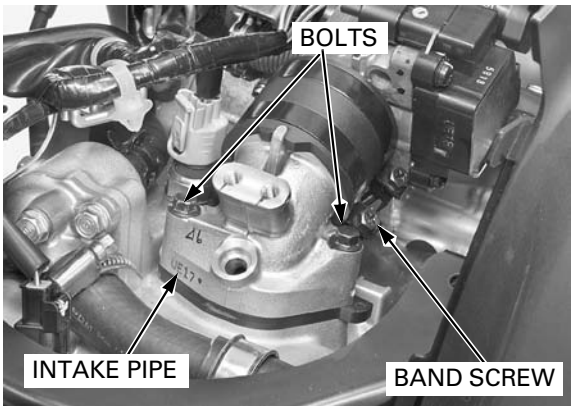

Remove the O-rings from the insulator.

Seal the cylinder head intake port with a shop towel or cover it with a piece of tape to prevent any foreign material from dropping into the engine.

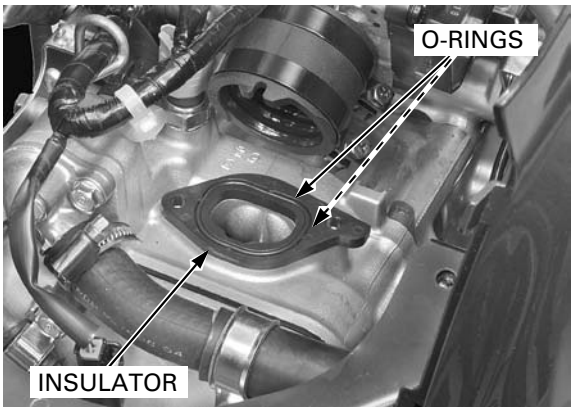

INSTALLATION

Install new O-rings to the groove on the insulator.

Install the insulator as shown.

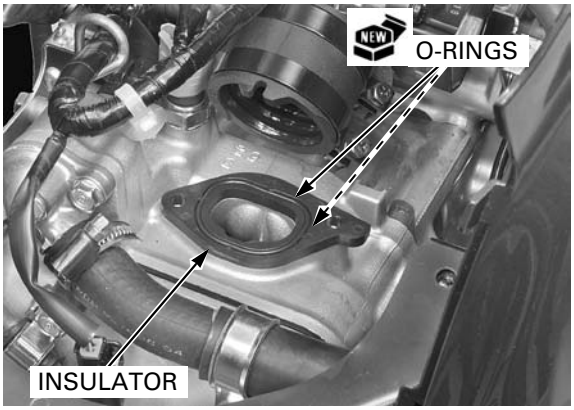

Install the intake pipe by aligning the intake pipe tab and insulator groove.
Tighten the insulator band screw to the specified torque.

TORQUE: 5 N·m (0.5 kgf·m, 3.7 lbf·ft)

Install and tighten the intake pipe mounting bolts.

Install the injector (page 6-62).

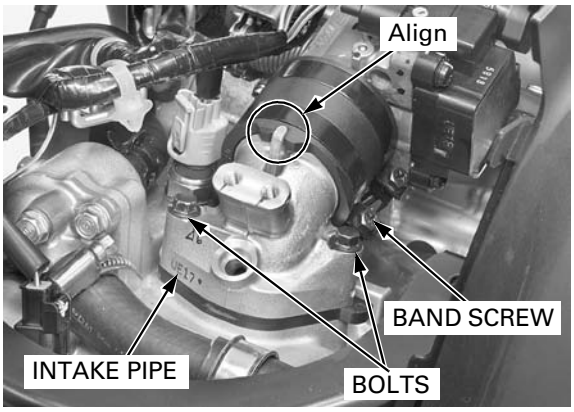

ECM

REMOVAL/INSTALLATION

Remove the rear fender A (page 3-7).

Disconnect the ECM 33P connector.
Remove the ECM from the rubber holder.

Installation is in the reverse order of removal.

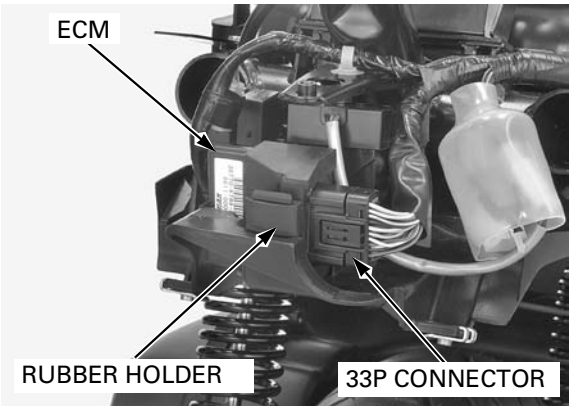

Engine Does Not Start (MIL Does Not Come On)

- Before starting the inspection, check for battery voltage.
- Before starting the inspection, check for loose or poor contact on the ECM 33P connector and recheck.

1. ECM Ground Line Inspection

Turn the ignition switch "OFF".

Disconnect the ECM 33P connector.

Check for continuity between the ECM 33P connector of the wire harness side and ground.

CONNECTION: No.9 (Green/White) – Ground
No.10 (Green/White) – Ground
No.2 (Green/Black) – Ground

TOOL:
Test probe 07ZAJ-RDJA110

Is there continuity?

YES – GO TO STEP 2.

NO – • Open circuit in Green/White wire.
• Open circuit in Green/Black wire.

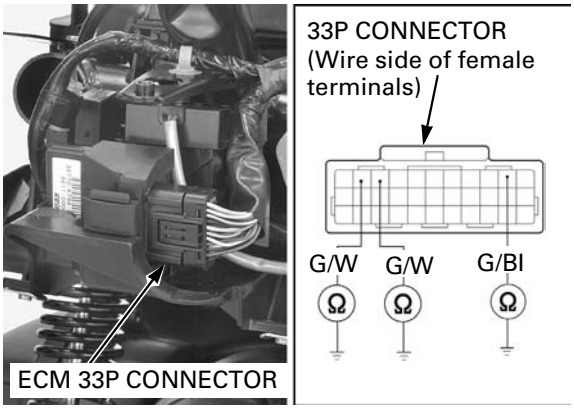

2. ECM Power Line Inspection

Turn the ignition switch "ON".

Measure the voltage between the ECM 33P connector of the wire harness side and ground.

CONNECTION: No.1 (Black/White) (+) – Ground (–)

TOOL:
Test probe 07ZAJ-RDJA110

Does the battery voltage exist?

YES – GO TO STEP 3.

NO – GO TO STEP 4.

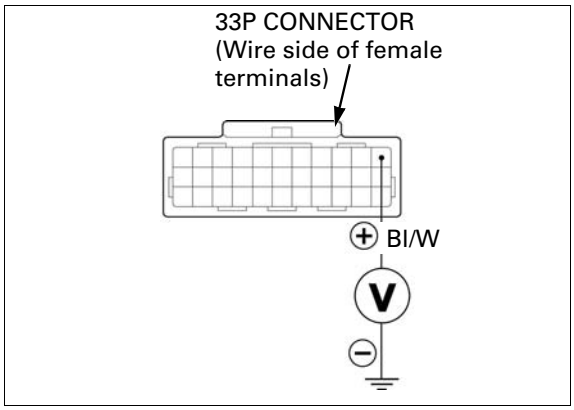

3. Sensor Unit Power Input Line Short Circuit Inspection

Turn the ignition switch "OFF".

Disconnect the ECM 33P connector.

Check for continuity between the sensor unit 5P (Black) connector of the wire harness side and ground.

CONNECTION: Yellow/Red – Ground
STANDARD: No continuity

Is there continuity?

YES – Short circuit in the Yellow/Red wire

NO – Replace the ECM with a new one, and recheck

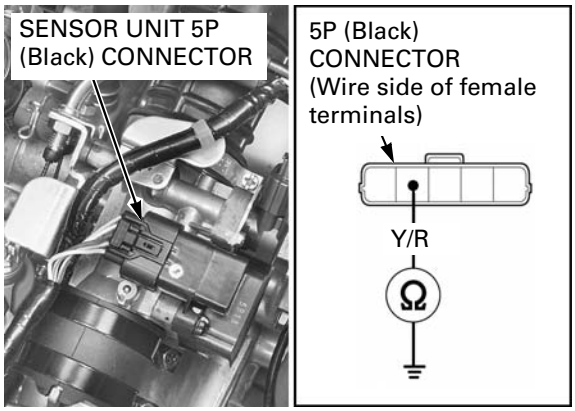

4. Engine Stop Relay Line Inspection

Turn the ignition switch "OFF".

Remove the engine stop relay from the relay connector.
Short the relay connector terminals of the wire harness side with a jumper wire.

CONNECTION: Red/Green – Black/White

Turn the ignition switch "ON".

Measure the voltage between the ECM 33P connector of the wire harness side and ground.

CONNECTION: No.1 (Black/White) (+) – Ground (–)

TOOL:
Test probe 07ZAJ-RDJA110

Does the battery voltage exist?

YES –
- Inspect the engine stop relay coil line (page 6-68)
- Inspect the engine stop relay continuity (page 6-67)
- Inspect the bank angle sensor (page 6-73)

NO –
- Open circuit in Red/Green wire between the engine stop switch and engine stop relay
- Inspect the engine stop switch (page 22-18).
- Open circuit in Black/White wire between the engine stop relay and ECM

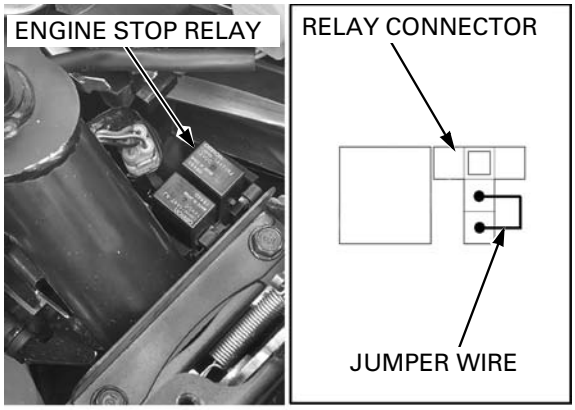

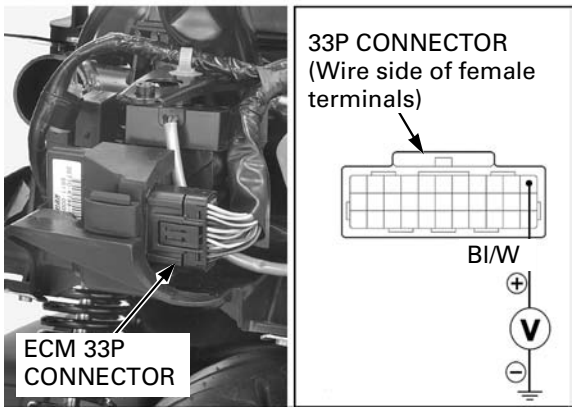

ENGINE STOP RELAY

OPERATION INSPECTION

Remove the rear body cover (page 3-6).

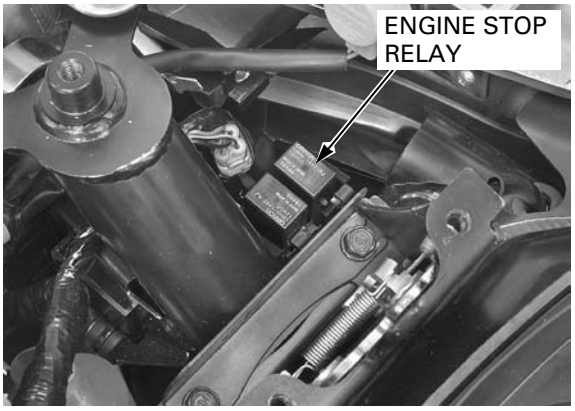

Turn the ignition switch "ON".
The engine stop relay coil is normal if the engine stop relay clicks.

If you hear the engine stop relay "CLICK", but IACV and fuel pump does not operate for a few seconds, inspect the following:

– Engine stop relay continuity inspection (page 6-67)
– Engine stop relay switch line inspection (page 6-68)

- If the above inspections and the ECM power/ground circuit (page 6-65) are normal, replace the ECM with a new one, and recheck.

If you do not hear the relay "CLICK", inspect the following:

– Engine stop relay coil line inspection (page 6-68)
– Engine stop relay continuity inspection (page 6-67)

- If the above inspections are normal, inspect the bank angle sensor (page 6-73).

CONTINUITY INSPECTION

Turn the ignition switch OFF.

Remove the engine stop relay (page 6-69).

Connect the ohmmeter to the switching side relay terminals.

Connection: A – B

Connect the 12 V battery to the coil side relay terminals.

Connection: C (+) – D (–)

There should be continuity between the relay terminals while the battery is connected, and no continuity when the battery is disconnected.

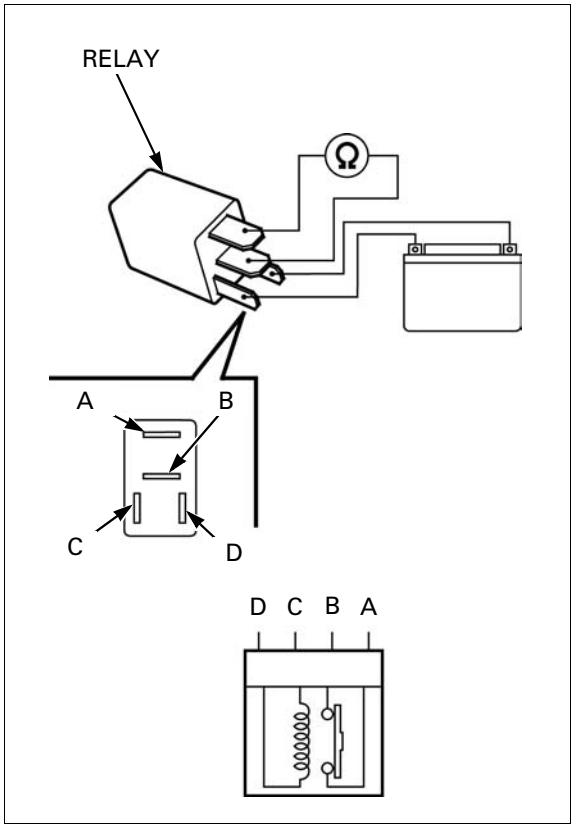

SWITCH LINE INSPECTION

Turn the ignition switch OFF.

Remove the engine stop relay (page 6-69).

Short the relay connector terminals of the wire harness side with a jumper wire.

Connection: Red/Green – Black/White

Disconnect the ECM 33P connector (page 6-65).

Turn the ignition switch "ON".

Measure the voltage between the ECM connector of the wire harness side and ground.

Connection: No.1 (Black/White) (+) – Ground (–)

TOOL:
Test probe **07ZAJ-RDJA110**

If the battery voltage appears, the engine stop relay switch line is normal.

If the battery voltage does not appear, inspect the following:

- Open circuit in Red/Green wire between the engine stop switch and engine stop relay switch line side
- Inspect the engine stop switch (page 22-18).
- Open circuit in Black/White wire between the engine stop relay and ECM

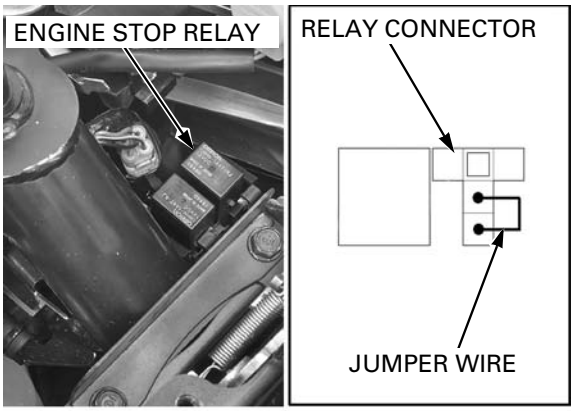

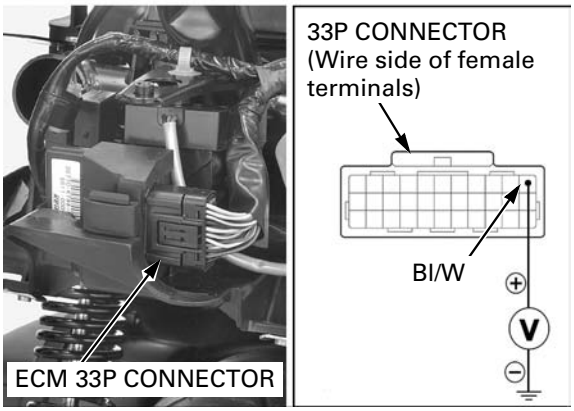

COIL LINE INSPECTION

Turn the ignition switch OFF.

Remove the engine stop relay (page 6-69).

Short the relay connector terminals of the wire harness side with a jumper wire.

Connection: Black – Red/Blue

Disconnect the bank angle sensor 6P connector.

Turn the ignition switch "ON".

Measure the voltage between the bank angle sensor connector of the wire harness side.

Connection: Red/Blue (+) – Green (–)

If the battery voltage appears, the engine stop relay coil line is normal.

If the battery voltage does not appear, inspect the following:

- Open circuit in Black wire between the fuse box and engine stop relay coil line side
- Open circuit in Red/Blue wire between the engine stop relay and bank angle sensor

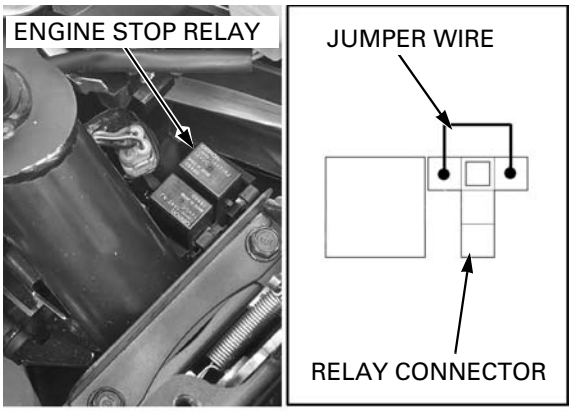

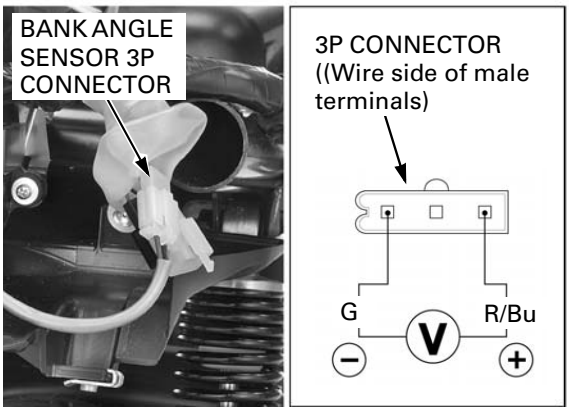

REMOVAL/INSTALLATION

Remove the rear body cover (page 3-6).

Remove the engine stop relay from the relay connector.

Installation is in the reverse order of removal.

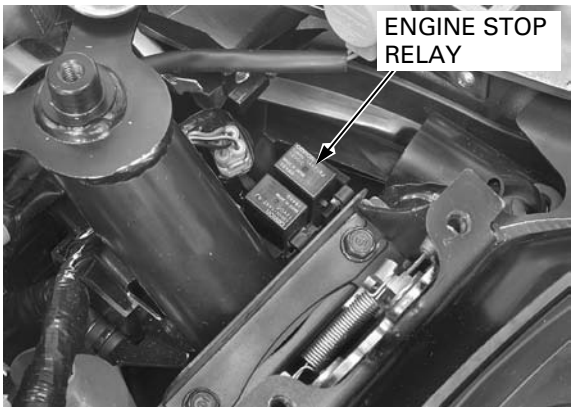

FUEL PUMP RELAY

OPERATION INSPECTION

Remove the rear body cover (page 3-6).

Turn the ignition switch "ON".
The fuel pump relay coil is normal if the fuel pump relay clicks.

If you hear the fuel pump relay "CLICK", but fuel pump does not operate for a few seconds, inspect the following:

– Fuel pump relay continuity inspection (page 6-70)
– Fuel pump relay switch line inspection (page 6-70)

- If the above inspections are normal, replace the fuel pump with a new one, and recheck.

If you do not hear the relay "CLICK", inspect the following:

– Fuel pump relay coil line (page 6-71)
– Fuel pump relay continuity inspection (page 6-70)

- if the above inspections are normal, Inspect the ECM power/ground line (page 6-65).

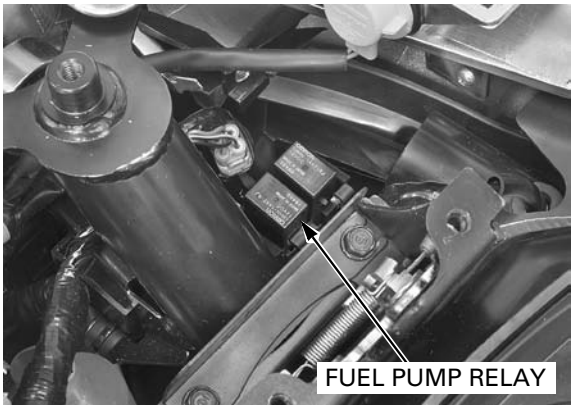

CONTINUITY INSPECTION

Turn the ignition switch OFF.

Remove the fuel pump relay (page 6-71).

Connect the ohmmeter to the switching side relay terminals.

Connection: A – B

Connect the 12 V battery to the coil side relay terminals.

Connection: C (+) – D (–)

There should be continuity between the relay terminals while the battery is connected, and no continuity when the battery is disconnected.

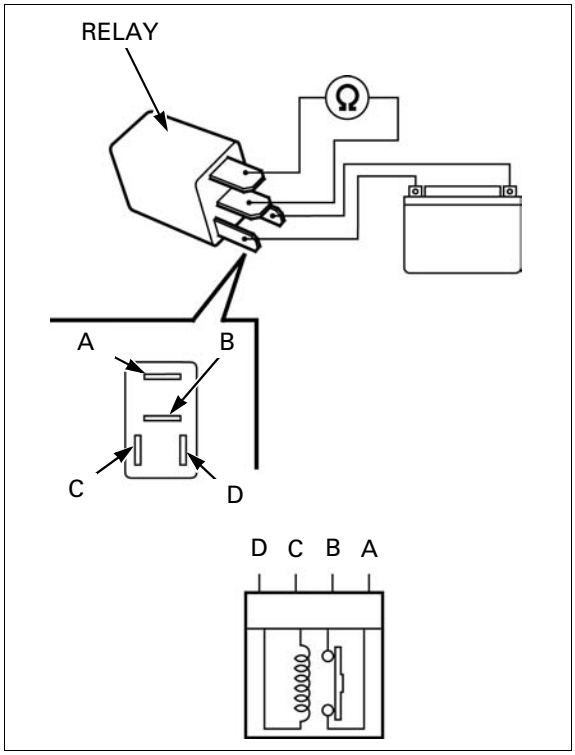

SWITCH LINE INSPECTION

Turn the ignition switch OFF.

Remove the fuel pump relay (page 6-71).

Short the relay connector terminals of the wire harness side with a jumper wire.

Connection: Black/White – Brown

Disconnect the fuel pump 5P connector (page 6-48).

Turn the ignition switch "ON".

Measure the voltage at the fuel pump connector of the wire harness side.

Connection: Brown (+) – Green (–)

If the battery voltage appears, the engine stop relay switch line is normal.

If the battery voltage does not appear, inspect the following:

- Open circuit in Black/White wire between the engine stop relay and fuel pump relay
- Open circuit in Brown wire between the fuel pump relay and fuel pump

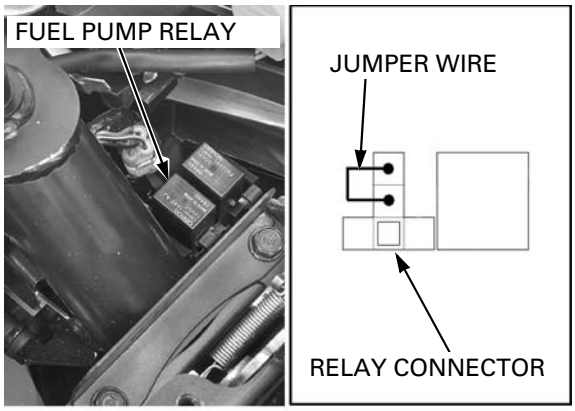

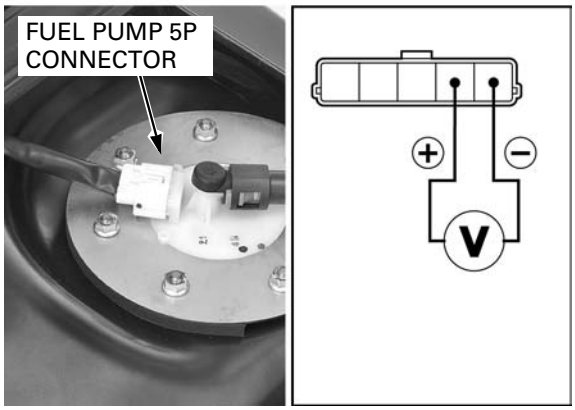

COIL LINE INSPECTION

Turn the ignition switch "OFF".

Remove the fuel pump relay (page 6-71).

Short the relay connector terminals of the wire harness side with a jumper wire.

Connection: Black/White – Brown/Black

Disconnect the ECM 33P connector (page 6-65).

Turn the ignition switch "ON".

Measure the voltage between the ECM connector of the wire harness side and ground.

Connection: No.8 (Brown/Black)(+) – Ground (–)

TOOL:
Test probe **07ZAJ-RDJA110**

If the battery voltage appears, the fuel relay coil line is normal.

If the battery voltage does not appear, inspect the following:

- Open circuit in Black/White wire between the engine stop relay and fuel pump relay
- Open circuit in Brown/Black wire between the fuel pump relay and ECM

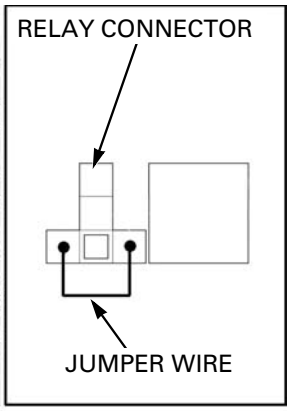

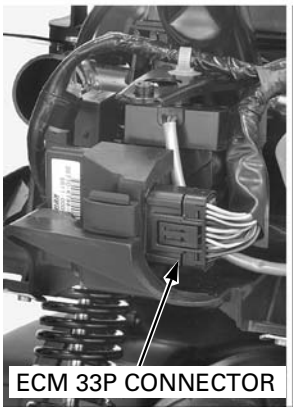

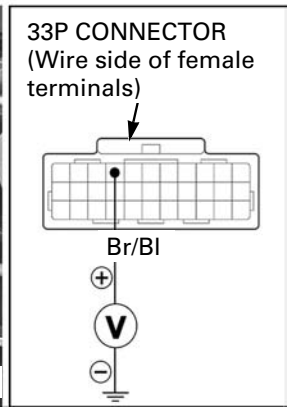

REMOVAL/INSTALLATION

Remove the rear body cover (page 3-6).

Remove the fuel pump relay from the relay connector.

Installation is in the reverse order of removal.

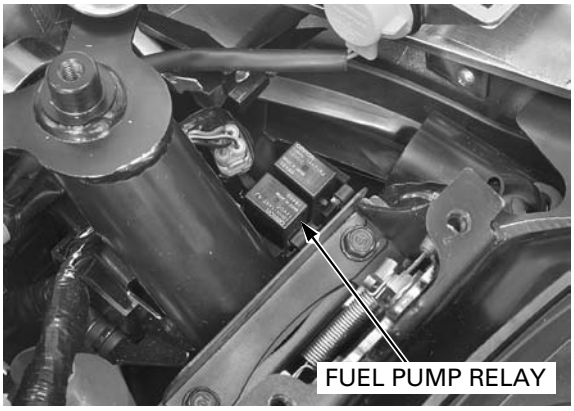

BANK ANGLE SENSOR

REMOVAL

Turn the ignition switch "OFF".

Remove the rear fender A (page 3-7).

Disconnect the bank angle sensor 3P connector.

Remove the two screws and bank angle sensor.

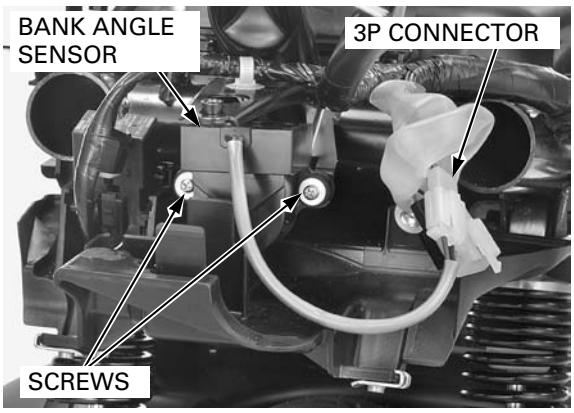

INSTALLATION

Install the bank angle sensor with its “UP” mark facing up.

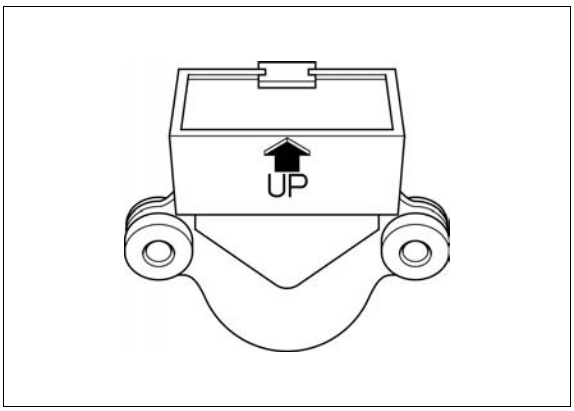

Install and tighten the two screws to the specified torque.

TORQUE: 1.2 N·m (0.1 kgf·m, 0.9 lbf·ft)

Connect the bank angle sensor 3P connector.

Install the following:

- Rear fender A (page 3-7)
- Body cover (page 3-6)
- Grub rail (page 3-5)
- Luggage box (page 3-5)

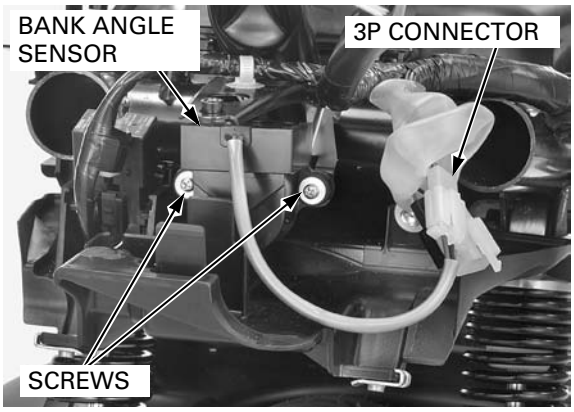

SYSTEM INSPECTION

Turn the ignition switch "OFF".

Remove the rear fender A (page 3-7).

Do not disconnect the bank angle sensor connector during inspection.

Remove the two screws and bank angle sensor.

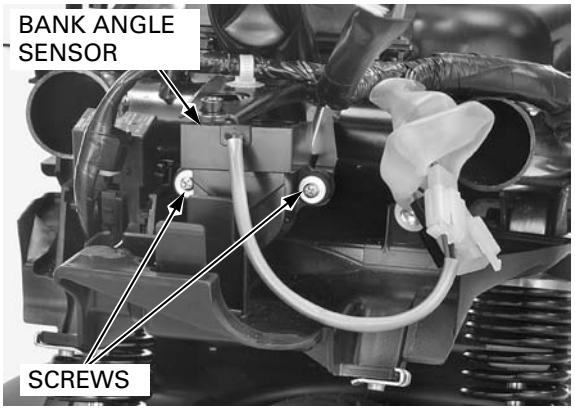

If you perform this test, turn the ignition switch "OFF", then turn the ignition switch "ON".

Place the bank angle sensor in normal position as shown, and turn the ignition switch "ON". The bank angle sensor is normal if the engine stop relay clicks, which indicates that circuit is closed.

Incline the bank angle sensor approximately 49 ± 4° to the left or right while the ignition switch is "ON". The bank angle sensor is normal if the engine stop relay clicks, which indicates that circuit is opened.

If the bank angle sensor does not operate, refer to the circuit inspection (page 6-74), if the circuit inspection is normal, replace the bank angle sensor with a new one and recheck.

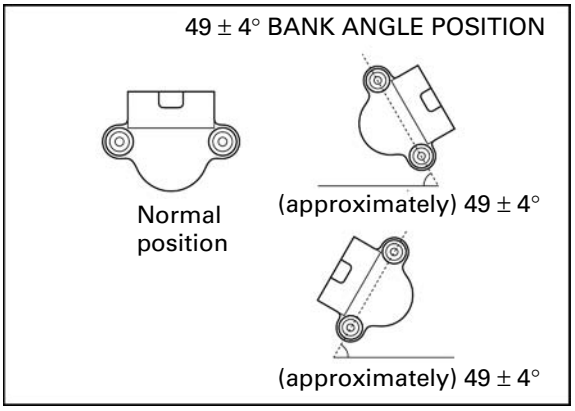

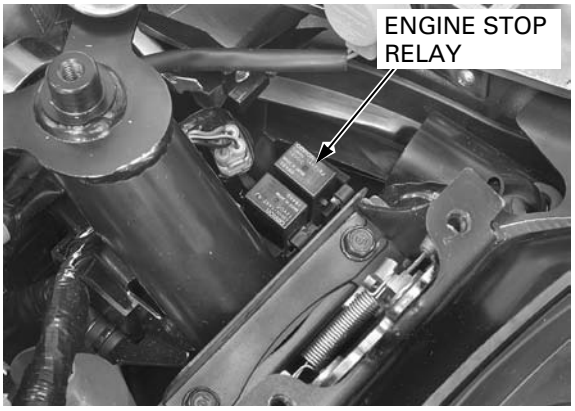

CIRCUIT INSPECTION

Support the scooter with its centerstand on a level surface.

Remove the rear fender A (page 3-7).

Disconnect the bank angle sensor 3P connector.

Turn the ignition switch "ON".

Measure the voltage at the bank angle sensor 3P connector terminals of the wire harness side.

CONNECTION: Black (+) – Green (–)

STANDARD: Battery voltage

If there is no voltage, check the following:

– Open circuit in Black wire.
– Open circuit in Green wire.

If there is battery voltage, check the following:

Measure the voltage at the bank angle sensor 3P connector terminals of the wire harness side.

CONNECTION: Red/Blue (+) – Green (–)

STANDARD: Battery voltage

If there is no voltage, check the open circuit in Red/Blue wire.

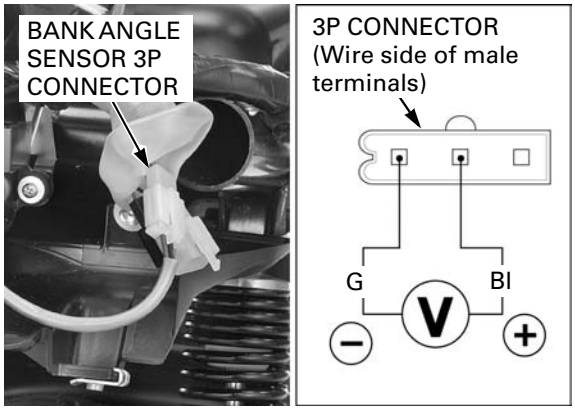

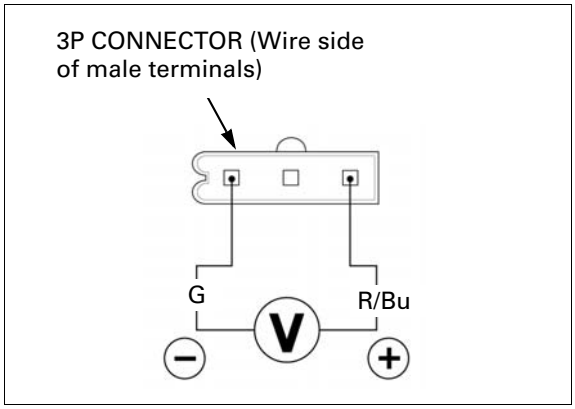

ECT SENSOR

REMOVAL

Drain the coolant (page 7-6).

Remove the luggage box (page 3-5).

Remove the ECT sensor while the engine is cold.

Disconnect the ECT sensor 3P (Gray) connector from the sensor.

Remove the ECT sensor and sealing washer.

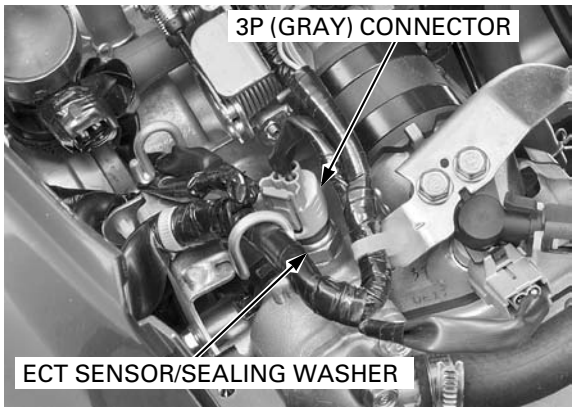

INSPECTION

Remove the ECT sensor (page 6-74).

Wear insulated gloves and adequate eye protection.
Keep flammable materials away from the burner.

Heat the coolant (1:1 mixture) with an electric heating element.
Suspend the ECT sensor in heated coolant and check the continuity through the sensor as the coolant heats up.

- Soak the ECT sensor in coolant up to its threads with at least 40 mm (1.57 in) from the bottom of the pan to the bottom of the switch.
- Keep temperature constant for 3 minutes before testing. A sudden change of temperature will result in incorrect readings. Do not let the thermometer or ECT sensor touch the pan.

CONNECTION: A – B

Temperature °C (°F)	20 (68)	80 (176)	110 (230)
Resistance (kΩ)	2.3 - 2.6	0.3 - 0.4	0.1 - 0.2

Replace the ECT sensor if it is out of specifications.

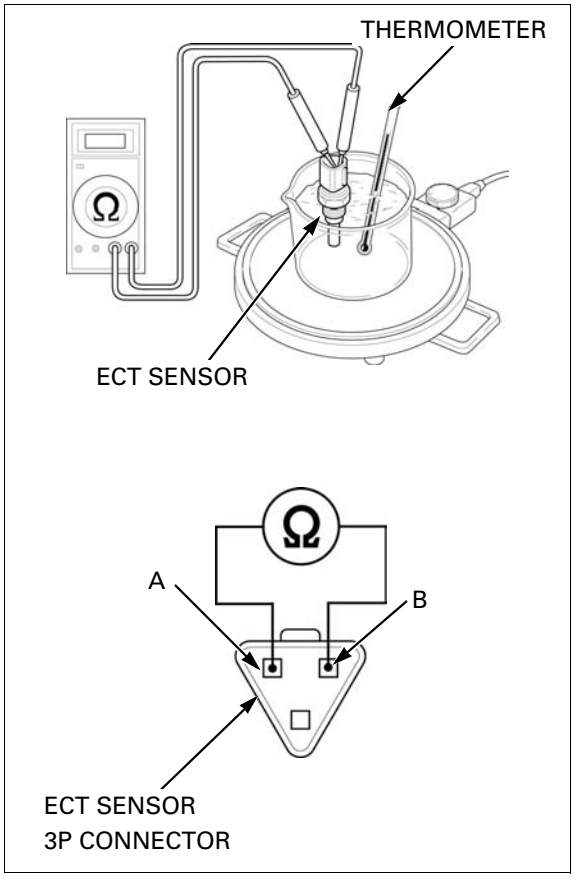

INSTALLATION

Always replace a sealing washer with a new one.

Install the new sealing washer and ECT sensor.

Tighten the ECT sensor to the specified torque.

TORQUE: 25 N·m (2.5 kgf·m, 18 lbf·ft)

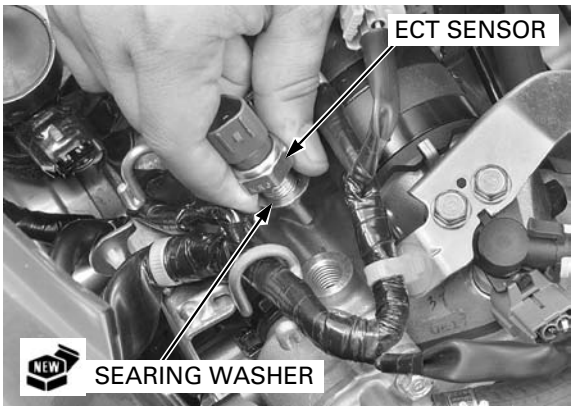

Connect the ECT sensor 3P (Gray) connector.

Fill the cooling system with recommended coolant (page 7-6).

Install the luggage box (page 3-5).

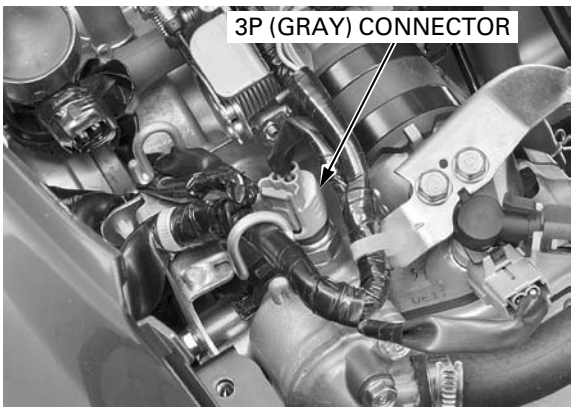

O_2 SENSOR

NOTICE

- *Do not get grease, oil or other materials in the O_2 sensor air hole.*
- *The O_2 sensor may be damaged if dropped. Replace it with a new one, if dropped.*

REMOVAL

Replace the O_2 sensor while the engine is cold.

Remove the maintenance lid (page 3-4).

Remove the O_2 sensor connector.

Remove the O_2 sensor from the cylinder head.

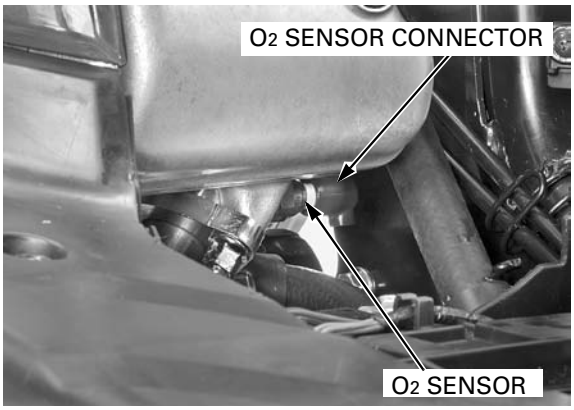

INSTALLATION

Install and tighten the O_2 sensor to the cylinder head to the specified torque.

TORQUE: 25 N·m (2.5 kgf·m, 18 lbf·ft)

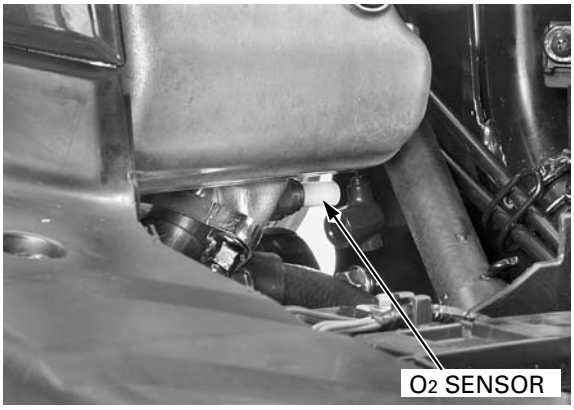

Connect the O_2 sensor connector.

After installation, make sure the exhaust gas does not leak.

Install the maintenance lid (page 3-4).

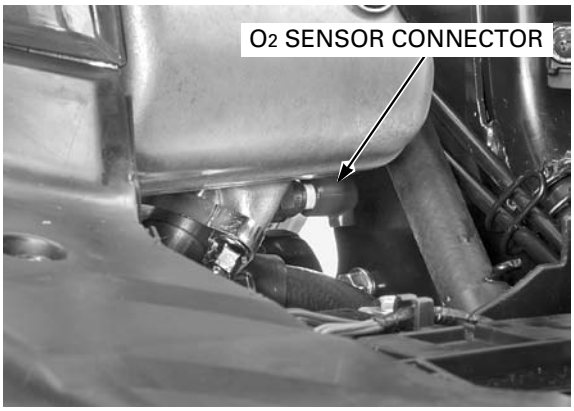

ENGINE IDLE SPEED

IDLE SPEED INSPECTION

- Inspect the idle speed after all other engine maintenance items have been performed and are within specifications.
- Before checking the idle speed, inspect the following items.
  - No DTC and MIL blinking.
  - Spark plug condition (page 4-7).
  - Air cleaner condition (page 4-6).
- The engine must be warm for accurate idle speed inspection.
- This system eliminates the need for manual idle speed adjustment compared to previous designs.
- Use a tachometer with graduations of 50 min^{-1} (rpm) or smaller that will accurately indicate a 50 min^{-1} (rpm) change.

Start the engine and warm it up to coolant temperature 80 °C (176 °F).
Stop the engine and connect a tachometer according to the tachometer manufacturer's operating instructions.
Start the engine and let it idle. Check the idle speed.

ENGINE IDLE SPEED: 1,500 ± 100 min^{-1} (rpm)

If the idle speed is out of the specification, check the following:

- Throttle operation and throttle grip free play (page 4-5).
- Intake air leak or engine top-end problem (page 9-6).
- IACV operation (page 6-77).

IACV

INSPECTION

The IACV is installed on the throttle body and is operated by the step motor. When the ignition switch is turned "ON", the IACV operates for a few seconds.

Check the step motor operating (beep) sound with the ignition switch turned "ON".

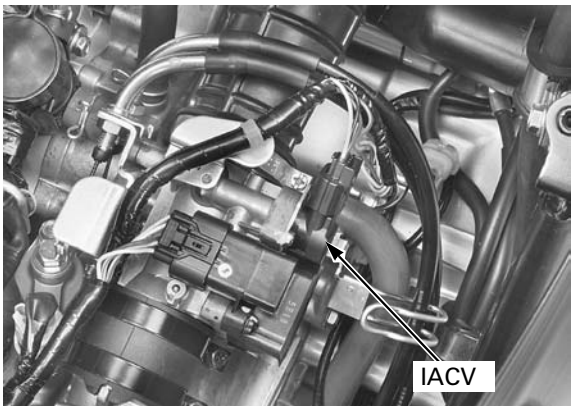

Remove the IACV (page 6-53).

Check the IACV slide valve and IACV air passage in the throttle body for carbon deposits.
Clean the IACV slide valve and IACV air passage if necessary.

The IACV operation can be checked visually as follows:

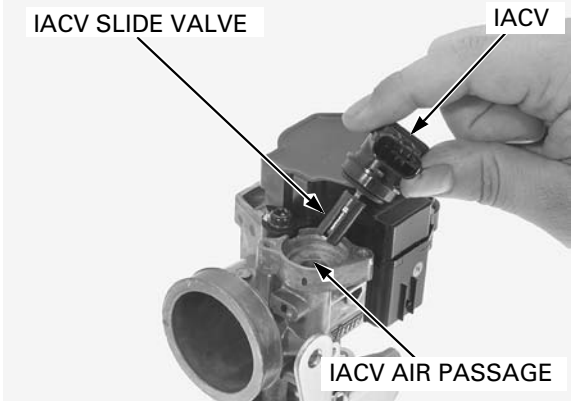

Connect the 4P connector to the IACV, then turn the ignition switch "ON".
The IACV slide valve should rotate while moving back and forth.

Turn the ignition switch "OFF".
Disconnect the IACV 4P connector and install the IACV (page 6-55).

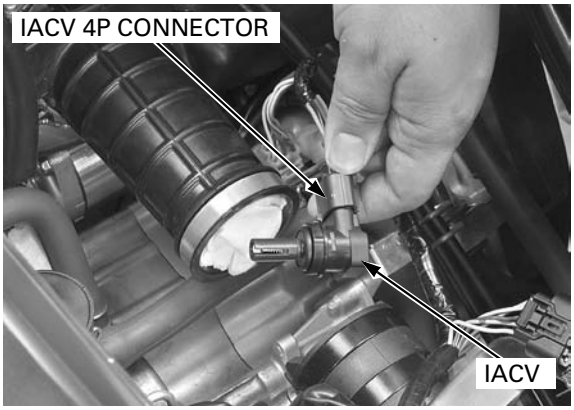

SECONDARY AIR SUPPLY SYSTEM

SYSTEM INSPECTION

Support the scooter with its centerstand.
Warm up the engine about ten minutes.
Stop the engine.

Remove the air cleaner element (page 4-6).

Check that the PAIR air suction hose port of air cleaner is clean and free of carbon deposits.

If the port is carbon fouled, check the PAIR check valve (page 6-79).

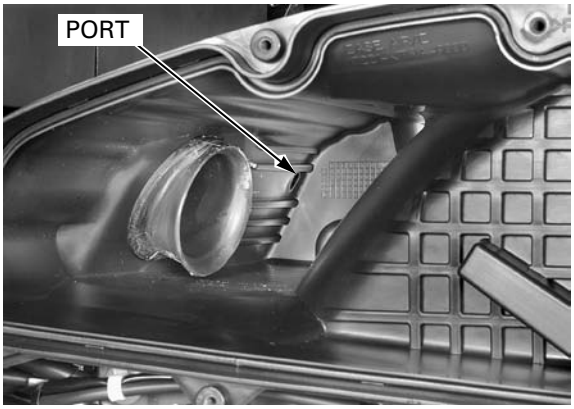

PAIR CONTROL SOLENOID VALVE

REMOVAL/INSTALLATION

Remove the luggage box (page 3-5).

Disconnect the air suction hose and air supply hose from the solenoid valve.

Disconnect the PAIR control solenoid valve 2P connector.

Remove the solenoid valve from stay.

Installation is in the reverse order of removal.

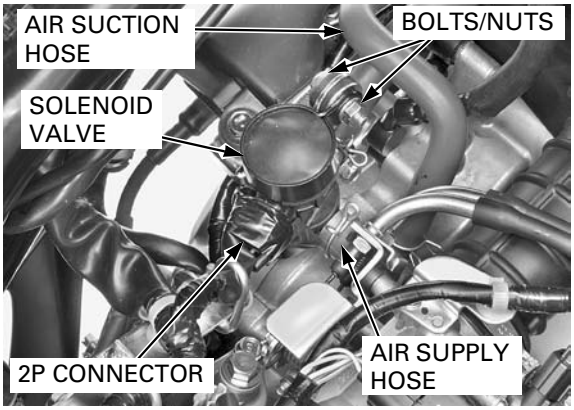

INSPECTION

Check air flow from A to B. Air should flow.

Connect the 12 V battery to the solenoid valve side 2P connector terminals.

Air should not flow from A to B when the battery is connected.

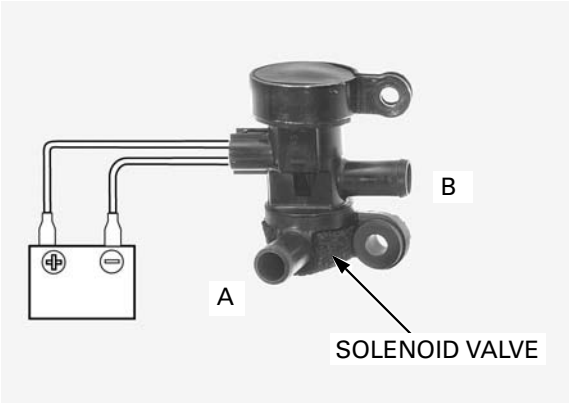

Measure the resistance between the connector terminals.

STANDARD: 20 – 24 Ω (20°C/68°F)

If it is out of the standard, replace the PAIR control solenoid valve.

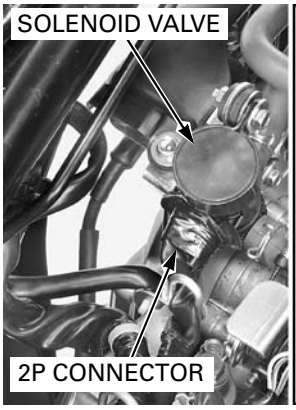

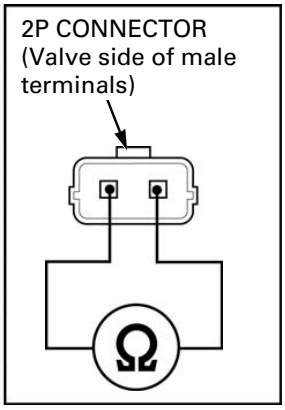

PAIR CHECK VALVE

INSPECTION

Remove the body cover (page 3-6).

Remove the bolts and PAIR check valve cover.

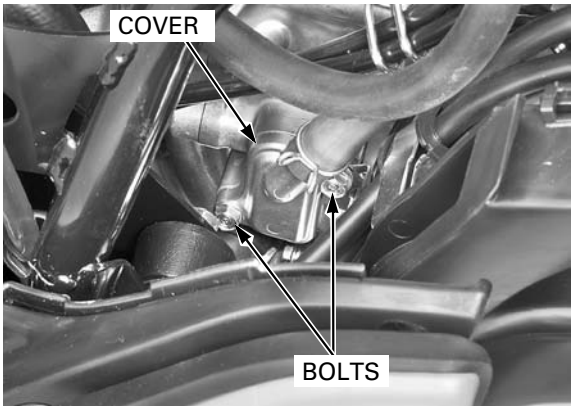

Remove the check valve and setting plate from the cylinder.

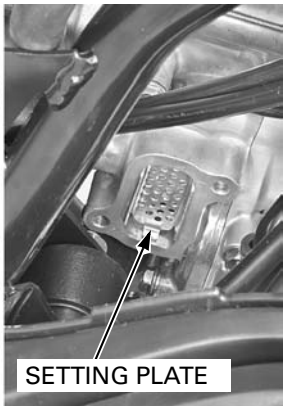

Check the reed valve for damage or fatigue. Replace if necessary.
Replace the PAIR check valve if the rubber seat is cracked, deteriorated or damaged, or if there is clearance between the reed and seat.

Installation is in the reverse order of removal.

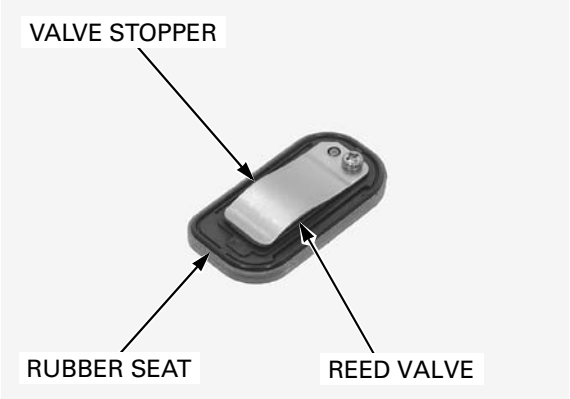

7. COOLING SYSTEM

SYSTEM FLOW PATTERN 7-2

SERVICE INFORMATION 7-3

TROUBLESHOOTING 7-4

SYSTEM TESTING 7-5

COOLANT REPLACEMENT 7-6

THERMOSTAT 7-9

WATER PUMP 7-10

RADIATOR COOLING FAN 7-13

RADIATOR 7-13

RADIATOR RESERVE TANK 7-14

SYSTEM FLOW PATTERN

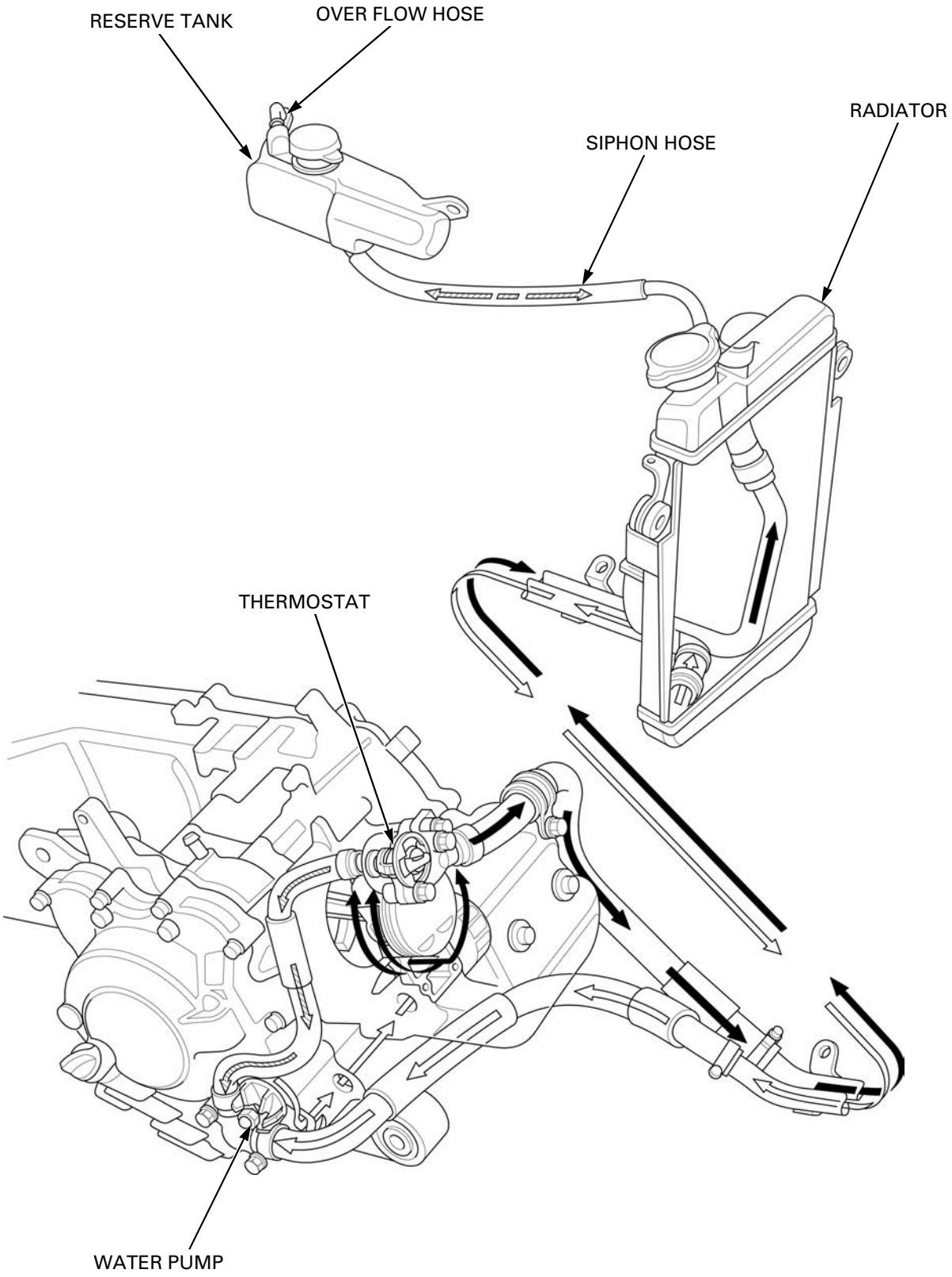

SERVICE INFORMATION

GENERAL

⚠ WARNING

Removing the radiator cap while the engine is hot can allow the coolant to spray out, seriously scalding you.
Always let the engine and radiator cool down before removing the radiator cap.

NOTICE

Using coolant with silicate inhibitors may cause premature wear of water pump seals or blockage of radiator passages. Using tap water may cause engine damage.

- Add coolant at the reserve tank. Do not remove the radiator cap except to refill or drain the system.
- All cooling system services can be done with the engine in the frame.
- Avoid spilling coolant on painted surfaces.
- After servicing the system, check for leaks with a cooling system tester.
- For coolant temperature gauge/ECT sensor information (page 22-14).

SPECIFICATIONS

ITEM		SPECIFICATIONS
Coolant capacity	Radiator and engine	1.1 liter (1.2 US qt, 1.0 Imp qt)
	Reserve tank	0.2 liter (0.2 US qt, 0.2 Imp qt)
Radiator cap relief pressure		108 – 137 kPa (1.1 – 1.4 kgf/cm^2, 16 – 20 psi)
Thermostat	Begin to open	80 – 84 °C (176 – 183 °F)
	Fully open	95 °C (203 °F)
	Valve lift	4.5 mm (0.18 in) minimum
Standard coolant concentration		1:1 mixture with distilled water

TORQUE VALUES

Water pump impeller	12 N·m (1.2 kgf·m, 9 lbf·ft)	Left-hand threads
Cooling fan motor mounting bolt	8.5 N·m (0.9 kgf·m, 6.3 lbf·ft)	

TOOLS

Bearing remover head, 14 mm 07WMC-KFG0100 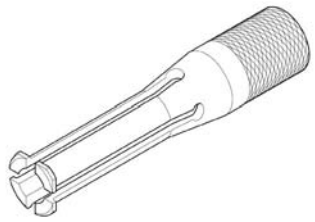	Bearing remover shaft, 15 mm 07936-KC10100 	Remover weight 07741-0010201 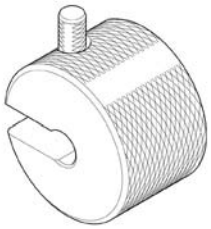
Driver 07749-0010000 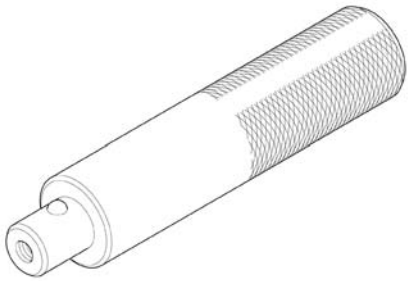	Attachment, 24 x 26 mm 07746-0010700 	Mechanical seal driver 07PMD-KBP0100 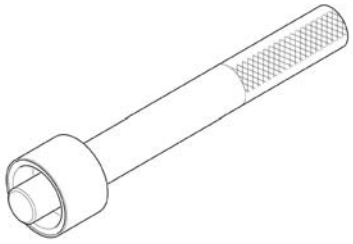

TROUBLESHOOTING

Engine temperature too high
- Insufficient coolant
- Air in system
- Faulty radiator cap
- Thermostat stuck closed
- Passage blocked in radiator, hoses or water jacket
- Faulty water pump
- Faulty cooling fan motor or fan motor circuit
- Faulty coolant temperature gauge circuit or ECT sensor (page 22-14)

Engine temperature too low
- Thermostat stuck open
- Faulty cooling fan motor or fan motor circuit
- Faulty coolant temperature gauge circuit or ECT sensor (page 22-14)

Coolant leaks
- Faulty water pump mechanical seal
- Deteriorated O-rings
- Damaged or deteriorated seals and gaskets
- Faulty radiator cap
- Loose hose connection or clamp
- Damaged or deteriorated hoses

SYSTEM TESTING

COOLANT (HYDROMETER TEST)

Remove the screw and radiator maintenance lid.

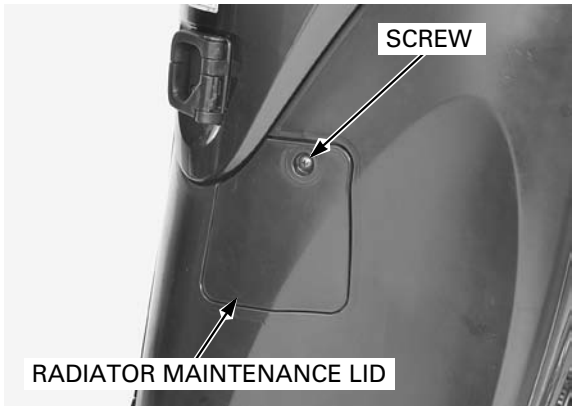

The engine must be cool before removing the radiator cap.

Remove the radiator cap.

Test the coolant gravity using a hydrometer.

STANDARD COOLANT CONCENTRATION:
1:1 (distilled water and the recommended antifreeze)

Look for contamination and replace the coolant if necessary.

COOLANT GRAVITY CHART

		Coolant temperature °C (°F)										
		0 (32)	5 (41)	10 (50)	15 (59)	20 (68)	25 (77)	30 (86)	35 (95)	40 (104)	45 (113)	50 (122)
Coolant ratio%	5	1.009	1.009	1.008	1.008	1.007	1.006	1.005	1.003	1.001	0.999	0.997
	10	1.018	1.017	1.017	1.016	1.015	1.014	1.013	1.011	1.009	1.007	1.005
	15	1.028	1.027	1.026	1.025	1.024	1.022	1.020	1.018	1.016	1.014	1.012
	20	1.036	1.035	1.034	1.033	1.031	1.029	1.027	1.025	1.023	1.021	1.019
	25	1.045	1.044	1.043	1.042	1.040	1.038	1.036	1.034	1.031	1.028	1.025
	30	1.053	1.052	1.051	1.047	1.046	1.045	1.043	1.041	1.038	1.035	1.032
	35	1.063	1.062	1.060	1.058	1.056	1.054	1.052	1.049	1.046	1.043	1.040
	40	1.072	1.070	1.068	1.066	1.064	1.062	1.059	1.056	1.053	1.050	1.047
	45	1.080	1.078	1.076	1.074	1.072	1.069	1.066	1.063	1.060	1.057	1.054
	50	1.086	1.084	1.082	1.080	1.077	1.074	1.071	1.068	1.065	1.062	1.059
	55	1.095	1.093	1.091	1.088	1.085	1.082	1.079	1.076	1.073	1.070	1.067
	60	1.100	1.098	1.095	1.092	1.089	1.086	1.083	1.080	1.077	1.074	1.071

RADIATOR CAP/SYSTEM PRESSURE INSPECTION

Remove the radiator cap (page 7-5).
Wet the sealing surfaces of the cap, then install the cap onto tester.

Pressurize the radiator cap using the tester.
Replace the radiator cap if it does not hold pressure, or if relief pressure is too high or too low. It must hold the specified pressure for at least 6 seconds.

RADIATOR CAP RELIEF PRESSURE:
108 – 137 kPa (1.1 – 1.4 kgf/cm^2, 16 – 20 psi)

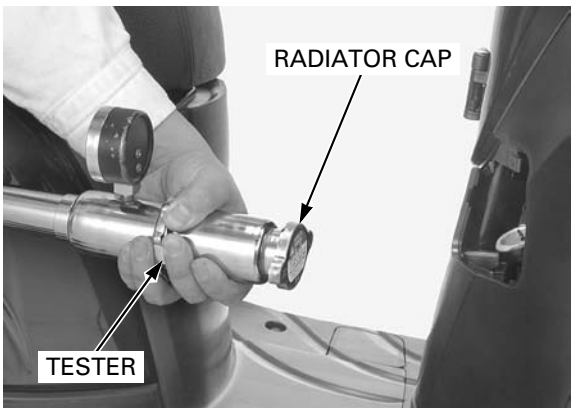

Pressure test the radiator, engine and hoses, and check for leaks.

NOTICE

Excessive pressure can damage the cooling system components. Do not exceed 137 kPa (1.4 kgf/cm^2, 20 psi).

Repair or replace components if the system will not hold the specified pressure for at least 6 seconds.

Remove the tester and install the radiator cap.

Install the radiator maintenance lid and tighten the screw.

COOLANT REPLACEMENT

PREPARATION

- The effectiveness of coolant decreases with the accumulation of rust or if there is a change in the mixing proportion during usage. Therefore, for best performance change the coolant regularly as specified in the maintenance schedule.
- Mix only distilled water with the antifreeze.

RECOMMENDED ANTIFREEZE:
High quality ethylene glycol antifreeze containing corrosion protection inhibitors

RECOMMENDED MIXTURE:
1:1 (distilled water and the recommended antifreeze)

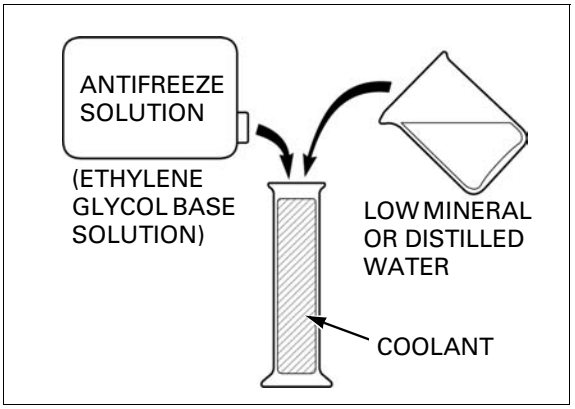

REPLACEMENT/AIR BLEEDING

The engine must be cool before servicing the cooling system.

Place the scooter on its centerstand on a level surface.

Remove the following:

- maintenance lid (page 3-4)
- luggage box (page 3-5)
- floor side cover (page 3-8)
- under cover (page 3-9)
- radiator maintenance lid (page 7-5)

Drain the coolant from the system by removing the drain bolt, sealing washer and the radiator cap, then disconnect the lower radiator hose and completely drain the residual coolant.

Reinstall the drain bolt with a new sealing washer.

Connect the radiator hose.

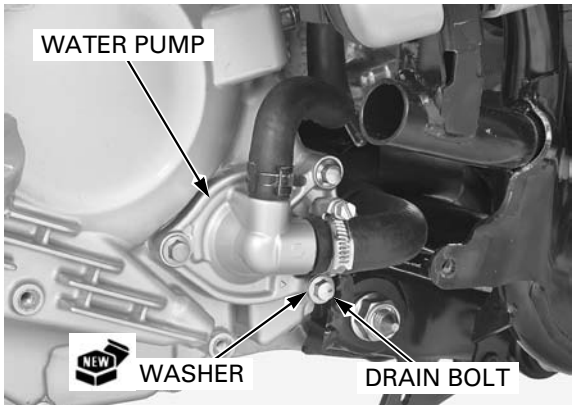

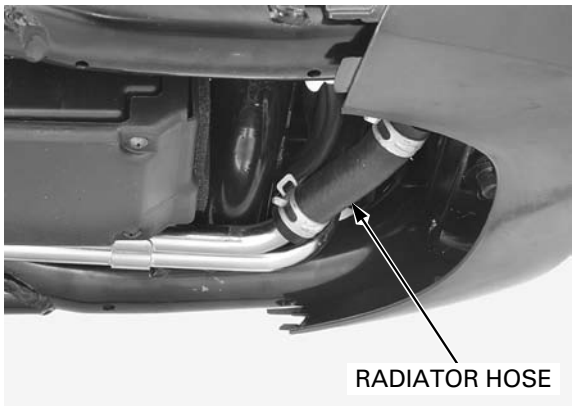

Remove the screw and reserve tank maintenance lid.

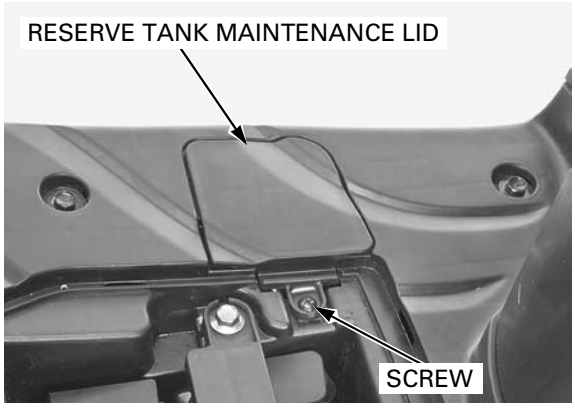

Remove the reserve tank cap.
Pump out the coolant with a fluid evacuator to drain the reservoir tank.

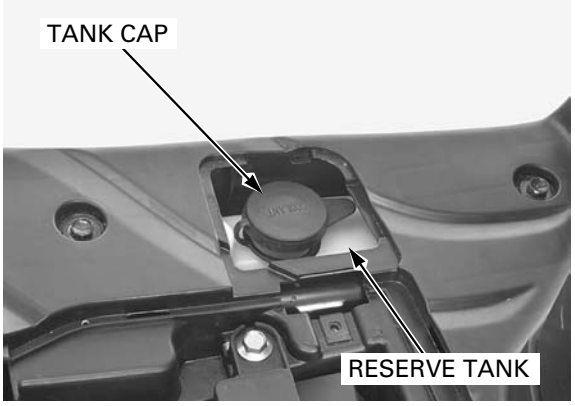

Remove the bolt and sealing washer.

Fill the coolant from the filler neck until the coolant starts dripping from the bolt hole.
Stop filling and install the bolt with a new sealing washer.

Fill the system with the recommended coolant through the filler opening up to the filler neck.

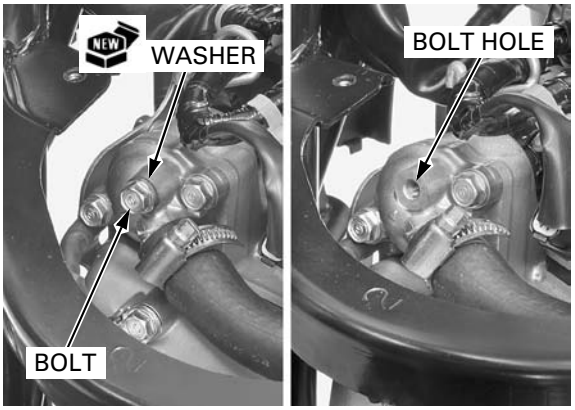

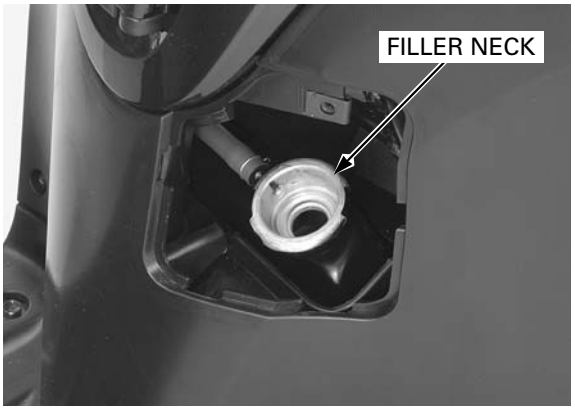

Fill the reserve tank to the upper level line and install the tank cap.

Bleed air from the system as follows:
1. Start the engine and let it idle for 2 – 3 minutes.
2. Snap the throttle 3 – 4 times to bleed air from the system.
3. Stop the engine and add coolant up to the filler neck.
4. Install the radiator cap.

Install the following:

– screw and reserve tank maintenance lid
– screw and radiator maintenance lid
– under cover (page 3-9)
– floor side cover (page 3-8)
– luggage box (page 3-5)
– maintenance lid (page 3-4)

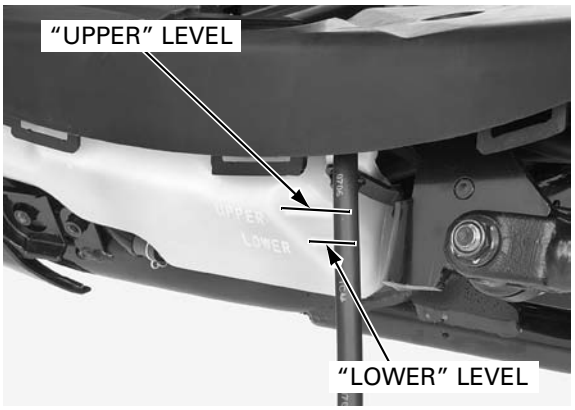

THERMOSTAT

REMOVAL/INSTALLATION

Remove the following:

– maintenance lid (page 3-4)
– luggage box (page 3-5)
– floor side cover (page 3-8)
– under cover (page 3-9)

Drain the coolant from the system (page 7-7).

Remove the following:

Place a shop towel under the thermostat housing.

– two bolts
– thermostat cover

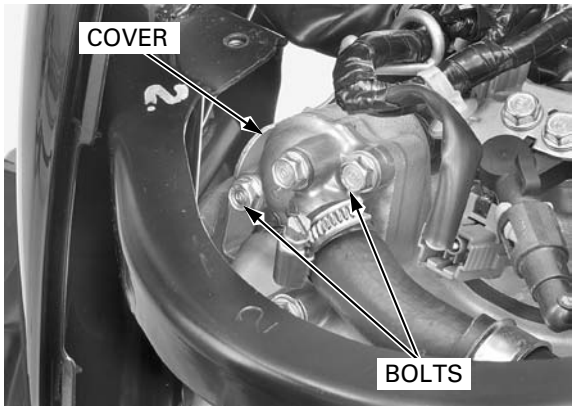

– thermostat

Installation is in the reverse order of removal.

- The thermostat is installed with the bleed hole facing up.

Fill and bleed the cooling system (page 7-6).

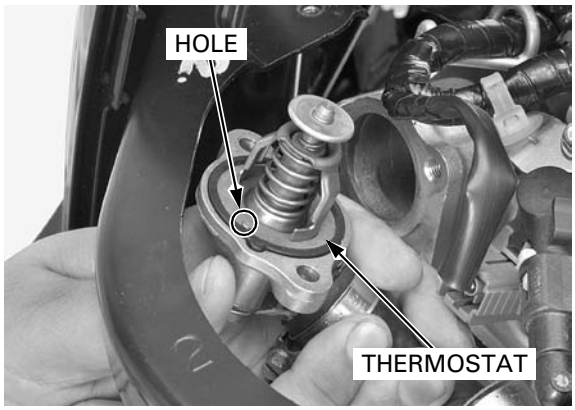

INSPECTION

Remove the thermostat (page 7-9).

Visually inspect the thermostat for damage.
Check for damage of the seal ring.
Replace the thermostat if the valve stays open at room temperature.

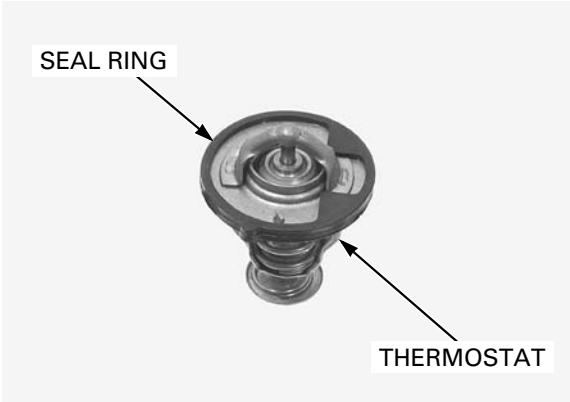

Do not let the thermostat or thermometer touch the pan, or you will get a false reading.

Heat a container of water with an electric heating element for 5 minutes.
Suspend the thermostat in heated water to check its operation.

THERMOSTAT BEGINS TO OPEN:
80 – 84 °C (176 – 183 °F)

VALVE LIFT:
4.5 mm (0.18 in) minimum at 95 °C (203 °F)

Replace the thermostat if the valve opens at a temperature other than those specified.

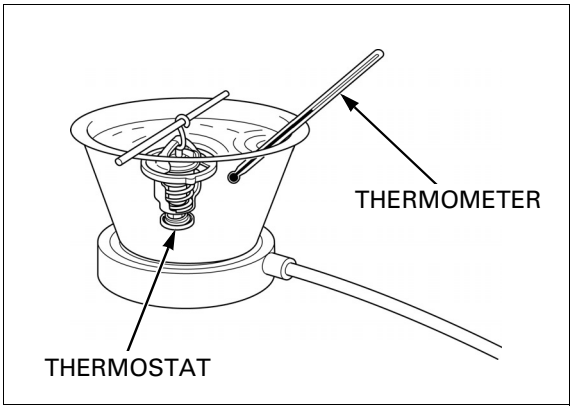

WATER PUMP

MECHANICAL SEAL INSPECTION

Check for signs of seal leakage.
A small amount of "weeping" from the inspection hole is normal.

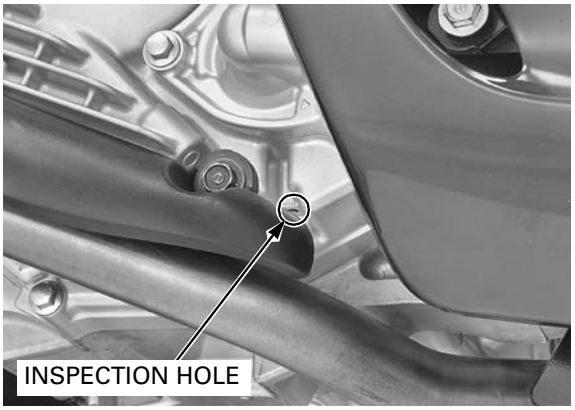

MECHANICAL SEAL REPLACEMENT

Remove the right crankcase cover (page 13-4).

Remove the following:

- two bolts
- sealing washer
- water pump cover
- O-ring
- two dowel pins

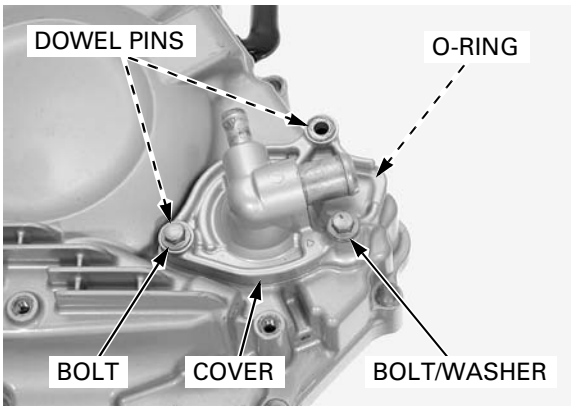

Turn the water pump impeller with your finger. The pump shaft should turn smoothly and quietly.
Replace the faulty part if the shaft do not turn smoothly or quietly.

The impeller has left-hand threads. Take care not to damage the mating surface of the crankcase cover.

Hold the pump shaft tab securely and remove the impeller/washer.

Remove the pump shaft and thrust washer from the right crankcase cover.

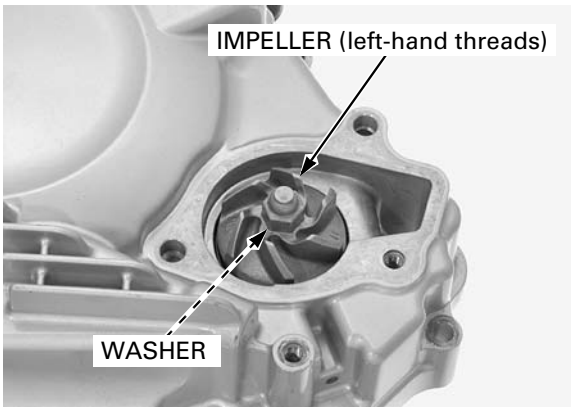

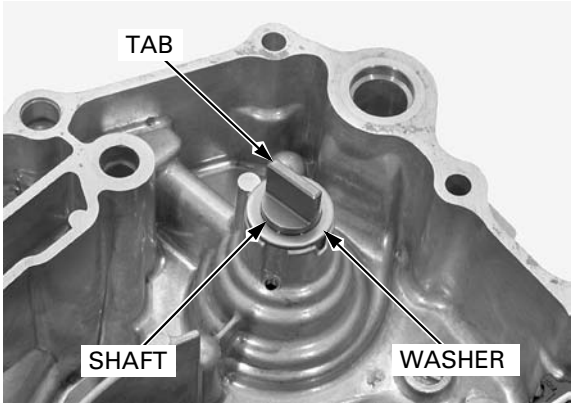

Remove the mechanical seal using the special tools.

TOOLS:

Bearing remover head, 14 mm	**07WMC-KFG0100**
Bearing remover shaft, 15 mm	**07936-KC10100**
Remover weight	**07741-0010201**

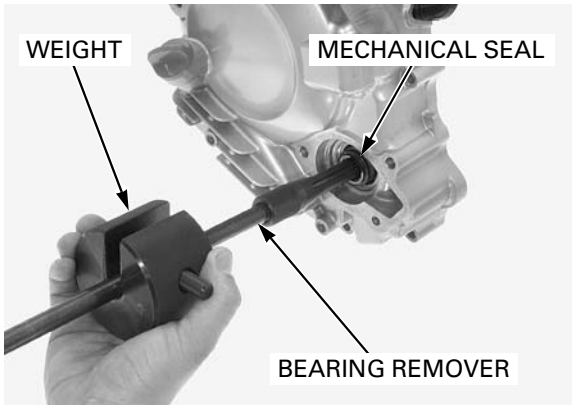

Remove the oil seal.

Blow the inspection hole in the crankcase cover with compressed air to clean it.

Apply engine oil to the seal lips and outer surface of a new oil seal.
Install the oil seal with the marking facing up until it is fully seated.

TOOLS:

Driver	**07749-0010000**
Attachment, 24 x 26 mm	**07746-0010700**

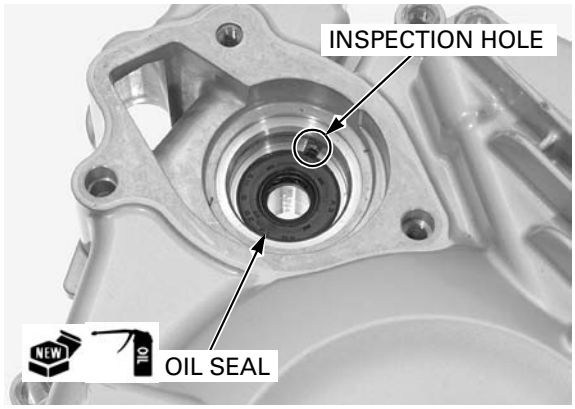

Drive a new mechanical seal.

TOOL:

Mechanical seal driver	**07PMD-KBP0100**

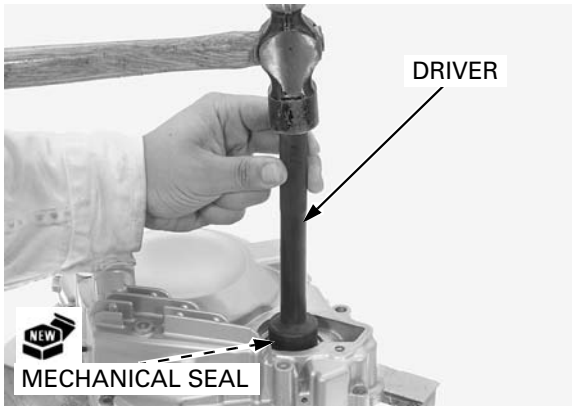

Degrease the pump shaft thoroughly and apply molybdenum oil solution to the shaft journal and thrust washer.

- Do not apply molybdenum oil solution to the mechanical seal sliding area.

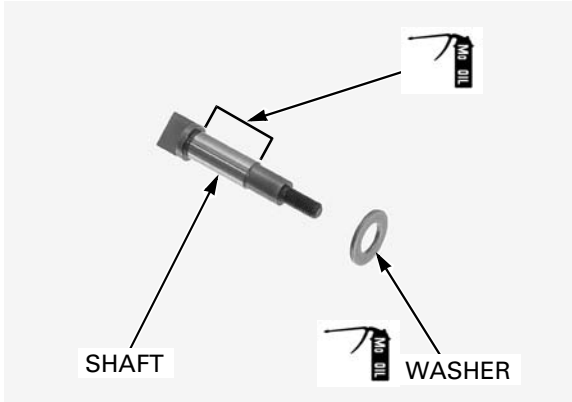

Install thrust washer with the chamfered (rolled) edge facing the pump shaft tab.

Install the thrust washer to the shaft.
Install the pump shaft into the right crankcase cover.

Check the pump shaft for smooth rotation.

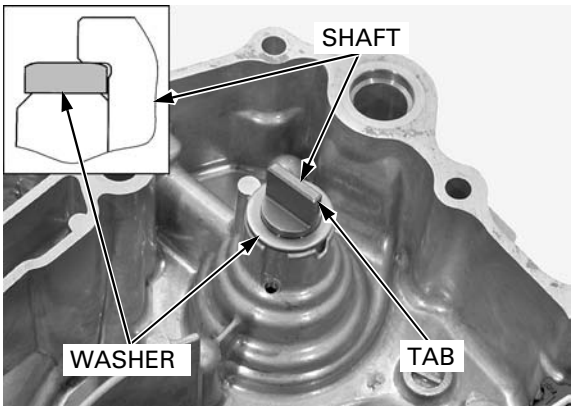

The impeller has left-hand threads. Take care not to damage the mating surface of the crankcase cover.

Install the washer and impeller.
Hold the pump shaft tab and tighten the impeller.

TORQUE: 12 N·m (1.2 kgf·m, 9 lbf·ft)

Check the pump shaft for smooth rotation.

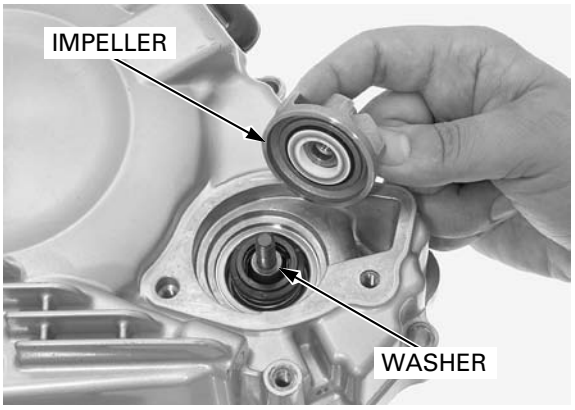

Install the two dowel pins to the right crankcase cover.

Install a new O-ring to the water pump cover.

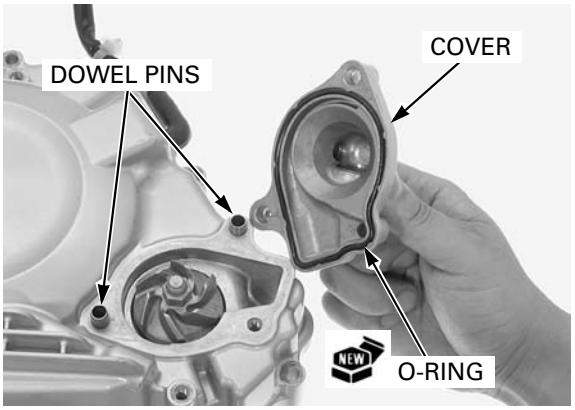

Install the water pump cover to the right crankcase cover and tighten the two bolts with a new sealing washer.

Install the right crankcase cover (page 13-5).

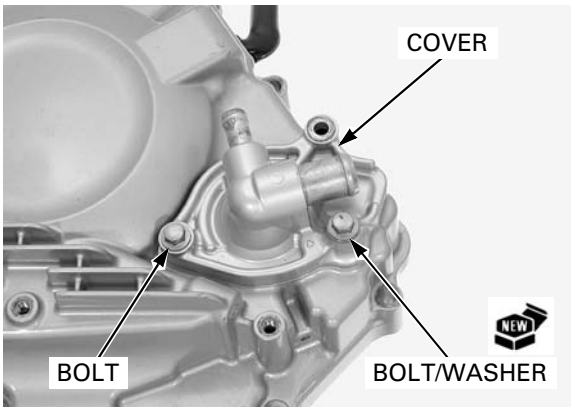

RADIATOR COOLING FAN

REMOVAL/INSTALLATION

Remove the following:

– floor side cover (page 3-8)
– front inner cover (page 3-10)
– floor panel (page 3-13)

Disconnect the cooling fan motor 2P (black) connector and release the wire from the three wire bands.

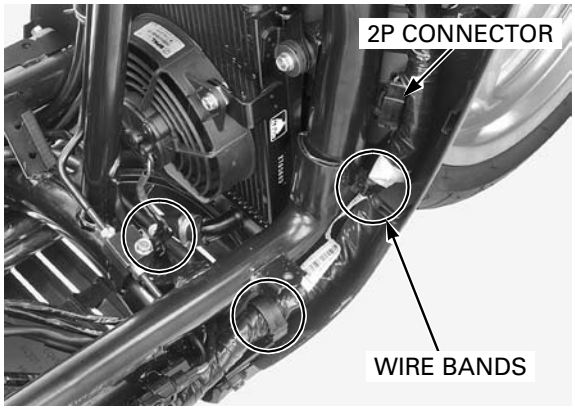

Be careful not to damage the radiator fins.

Remove the two mounting bolts and fan motor assembly.

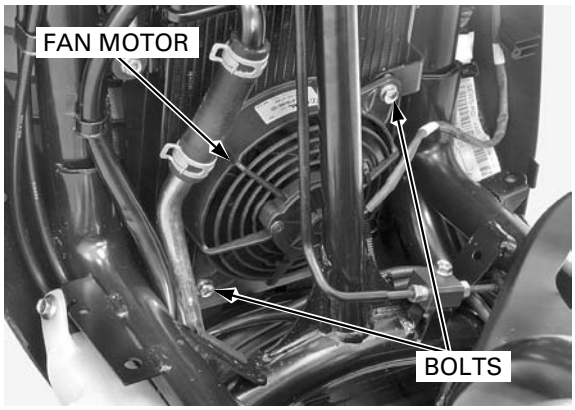

Route the fan motor wire properly (page 1-19).

Installation is in the reverse order of removal.

TORQUE:
Cooling fan motor mounting bolt:
8.5 N·m (0.9 kgf·m, 6.3 lbf·ft)

RADIATOR

REMOVAL/INSTALLATION

Remove the following:

– floor side cover (page 3-8)
– under cover (page 3-9)
– front inner cover (page 3-10)
– floor panel (page 3-13)
– cooling fan motor (page 7-13)

Drain the coolant from the system (page 7-7).

Disconnect the four water hoses.
Disconnect the radiator siphon hose.

Remove the two bolts and water pipe.

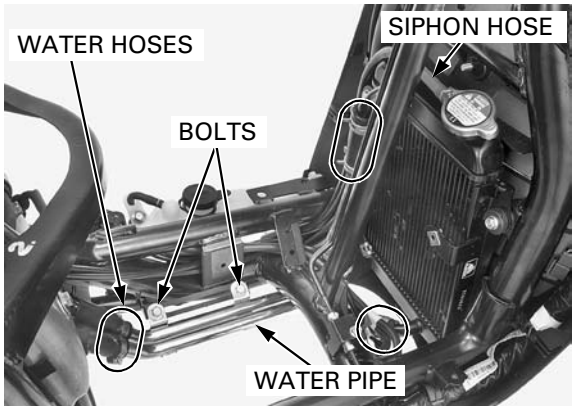

Be careful not to damage the radiator fins.

Remove the two mounting bolts and radiator.

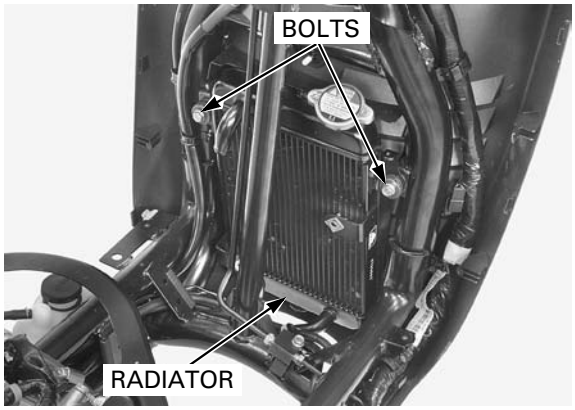

Route the wire harness properly (page 1-19).

Installation is in the reverse order of removal.

- When installing the radiator, align the rubber of the radiator and hole of the frame.

Fill and bleed the cooling system (page 7-6).

RADIATOR RESERVE TANK

REMOVAL/INSTALLATION

Remove the following:

- floor side cover (page 3-8)
- front inner cover (page 3-10)
- floor panel (page 3-13)

Drain the coolant from the system (page 7-7).

Disconnect the over flow hose and siphon hose from the reserve tank.
Remove the mounting bolts and reserve tank.

Installation is in the reverse order of removal.

Fill the reserve tank to the upper level line, if it was drained (page 4-14).

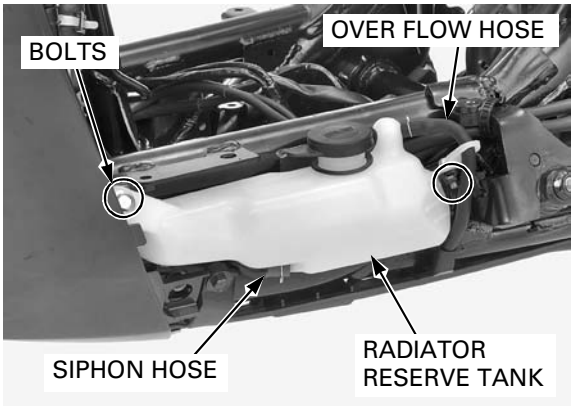

8. ENGINE REMOVAL/INSTALLATION

COMPONENT LOCATION 8-2

SERVICE INFORMATION 8-3

ENGINE REMOVAL 8-4

ENGINE INSTALLATION 8-9

COMPONENT LOCATION

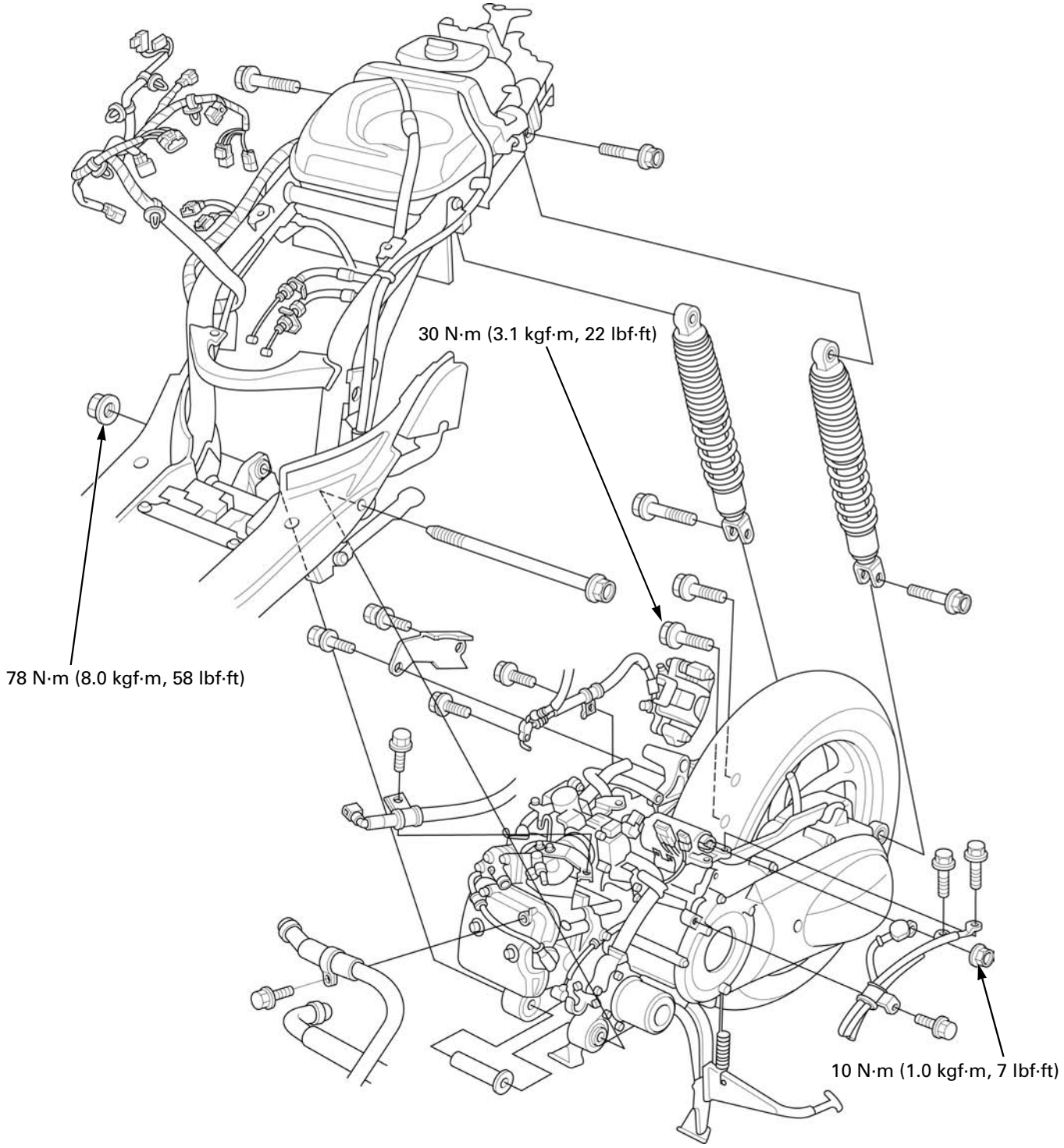

SERVICE INFORMATION

GENERAL

- When removing/installing the engine, tape the frame around the engine beforehand for frame protection.
- A hoist or equivalent is required to support the frame when removing and installing the engine. Support the engine using a jack or other adjustable support to ease engine mounting bolt removal.
- Do not support the engine using the engine oil filter or it will be damaged.
- The crankcase and crankshaft require engine removal for service. Other components can be serviced with the engine installed in the frame.

SPECIFICATIONS

ITEM		SPECIFICATIONS
Engine dry weight		41 kg (90.4 lbs)
Engine oil capacity	After draining	1.2 liter (1.3 US qt, 1.1 Imp qt)
	After oil filter change	1.4 liter (1.5 US qt, 1.2 Imp qt)
	After disassembly	1.7 liter (1.8 US qt, 1.5 Imp qt)
Coolant capacity (radiator and engine)		1.1 liter (1.2 US qt, 1.0 Imp qt)

TORQUE VALUES

Frame pivot nut	78 N·m (8.0 kgf·m, 58 lbf·ft)	U-nut.
Engine pivot nut	78 N·m (8.0 kgf·m, 58 lbf·ft)	U-nut.
Engine hanger bracket nut	64 N·m (6.5 kgf·m, 47 lbf·ft)	U-nut.
Swing rod nut (Upper)	42 N·m (4.3 kgf·m, 31 lbf·ft)	U-nut.
Swing rod nut (Lower)	52 N·m (5.3 kgf·m, 38 lbf·ft)	U-nut.
Rear brake caliper mounting bolt	30 N·m (3.1 kgf·m, 22 lbf·ft)	Aloc bolt; replace with a new one
Starter motor cable terminal nut	10 N·m (1.0 kgf·m, 7 lbf·ft)	

TOOLS

Bearing remover, 20 mm 07931-MA70000 	Driver 07749-0010000 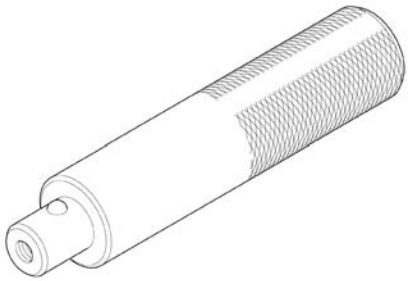	Attachment, 24 x 26 mm 07746-0010700
Pilot, 20 mm 07746-0040500 		

ENGINE REMOVAL

Remove the following:

- maintenance lid (page 3-4)
- luggage box (page 3-5)
- grab rail (page 3-5)
- body cover (page 3-6)
- rear fender A (page 3-7)
- floor side cover (page 3-8)
- under cover (page 3-9)
- exhaust system (page 3-15)
- throttle cable (page 6-53)
- fuel injector quick connect fitting (page 6-44)
- air cleaner (page 6-52)

Drain the engine oil (page 4-11).
Drain the coolant (page 7-7).

Remove the two bolts and brake hose protector.

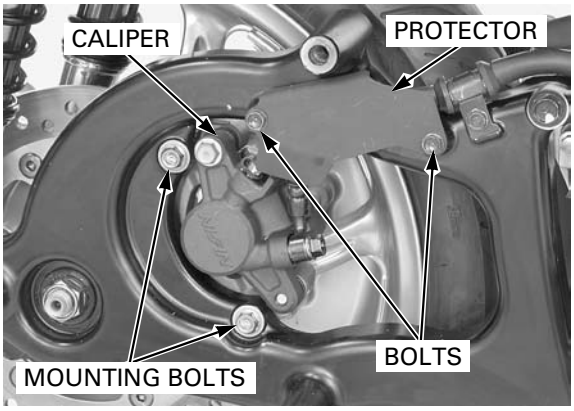

Support the brake caliper so that it does not hang from the brake hose. Do not twist the brake hose.

Remove the two caliper mounting bolts and rear brake caliper.

Remove the two bolts and brake hose clamps.

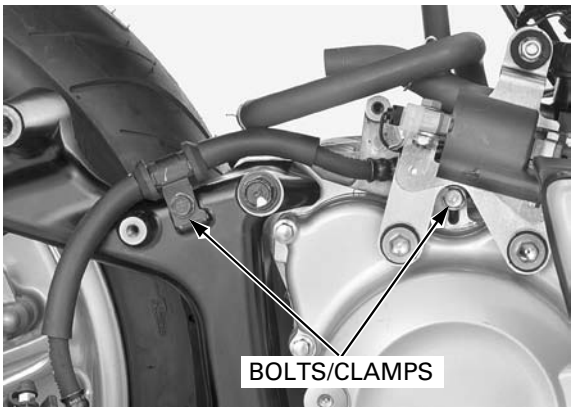

Disconnect the ignition coil wire connectors.

Release the wire band and ignition coil wire.

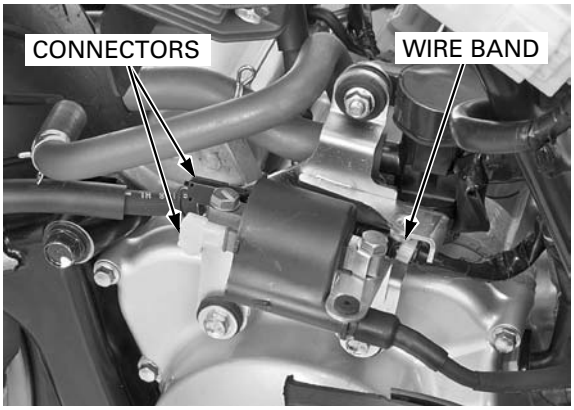

Disconnect the alternator 3P connector and CKP sensor 2P (red) connector.

Release the alternator and CKP sensor wires from the clamp.

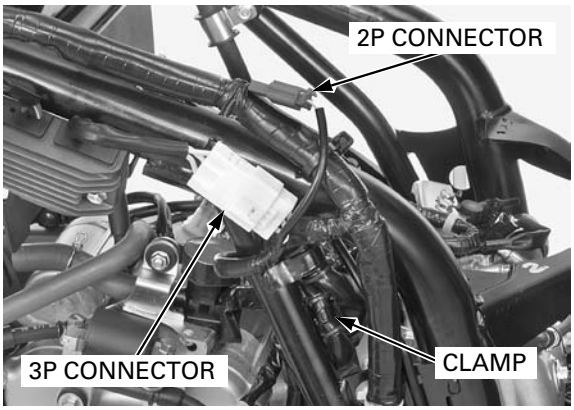

Disconnect the PAIR control solenoid valve 2P (Black) connector.

Release the three wire bands from the wire band stay.

Release the main wire harness, alternator and CKP sensor wires from the two wire guides.

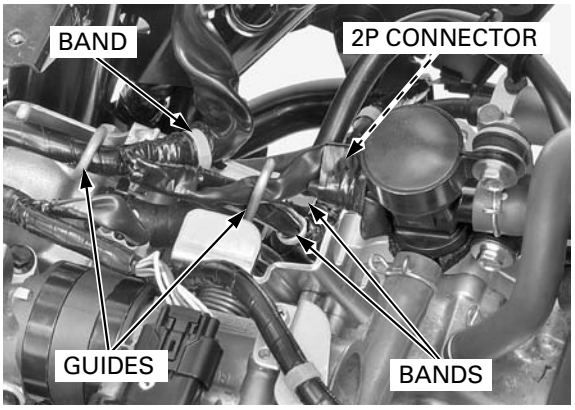

Disconnect the ECT sensor 3P (gray) connector and injector 2P (black) connector.

Release the wire band from the wire band stay.

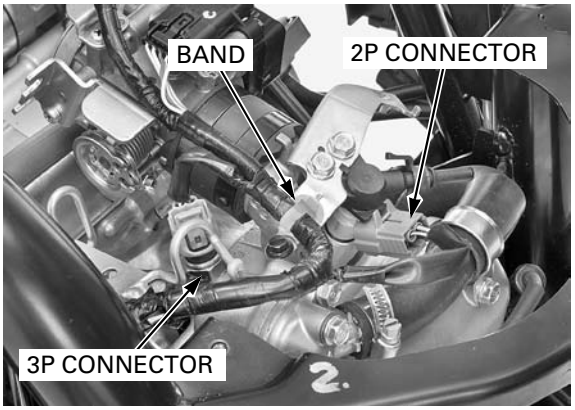

Disconnect the sensor unit 5P (black) connector and IACV 4P connector.

Release the wire band from the wire band stay.

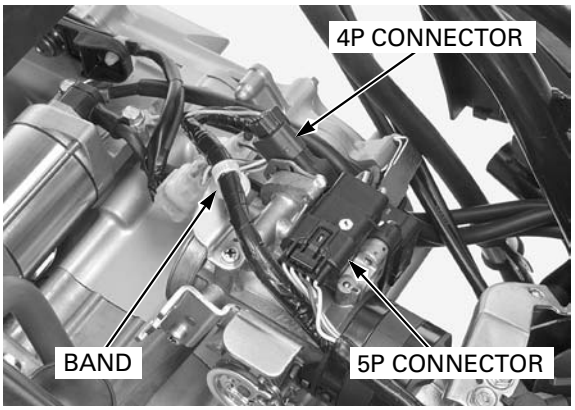

Disconnect the VS sensor connector.

- STD type: 4P connector
- ABS type: 6P connector

Disconnect the O_2 sensor 2P connector.

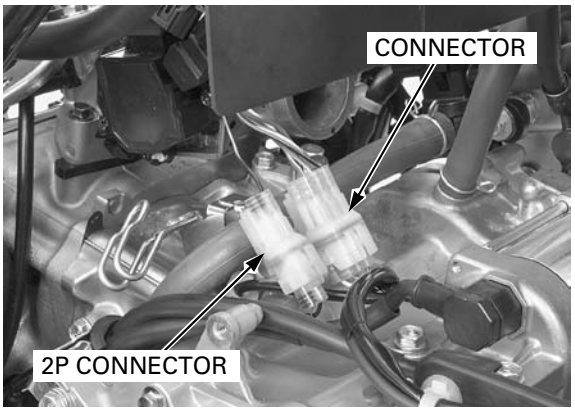

Remove the starter motor mounting bolts and release the battery negative (–) cable and frame ground cable from the starter motor.

Remove the terminal nut and release the starter motor cable form the starter motor.

Remove the bolt and cable clamp.

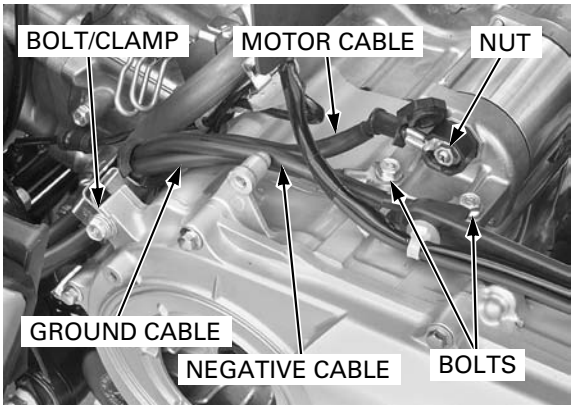

Remove the bolt and hose clamp.

Loosen the band screw and disconnect the upper water hose.

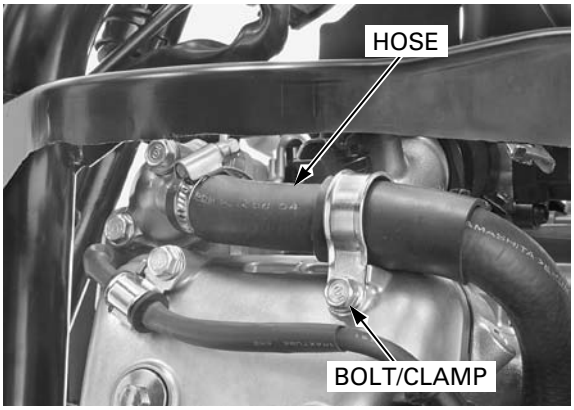

Loosen the band screw and disconnect the lower water hose.

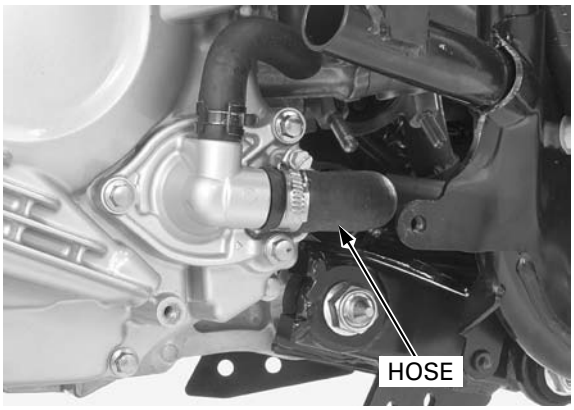

Place a floor jack or other adjustable support under the engine and support it securely.
Support the frame securely with a hoist or equivalent.

Remove the bolts and shock absorbers.

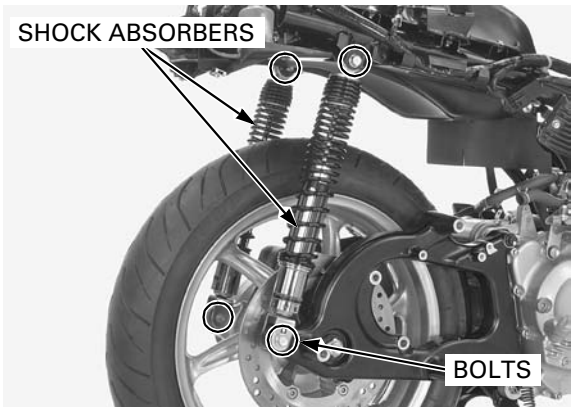

Remove the engine pivot nut and bolt.

The jack height must be adjusted to relieve stress for ease of bolt removal.

Make sure the wires and cables do not interfere with the engine components, and separate the frame from the engine.

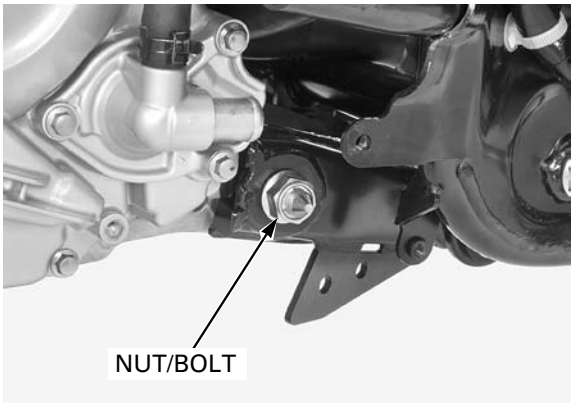

Remove the distance collar and engine mounting bushings.

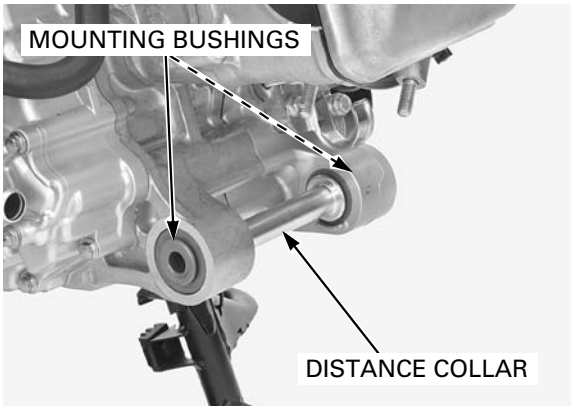

Remove the frame pivot nut, bolt and engine hanger bracket.

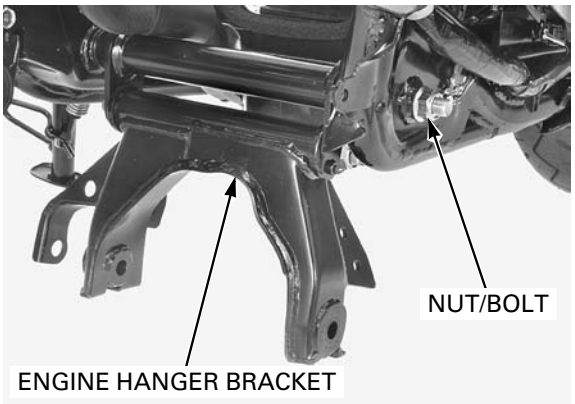

Remove the swing rod pivot nuts, washer (lower), bolts and the swing rod.

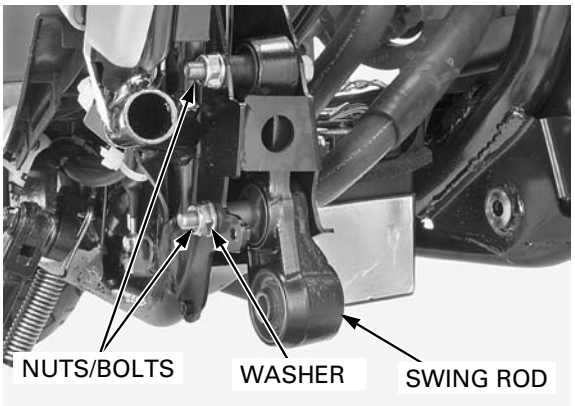

Remove the engine hanger bracket nut, bolt and separate the engine hanger bracket B from the engine hanger bracket A.

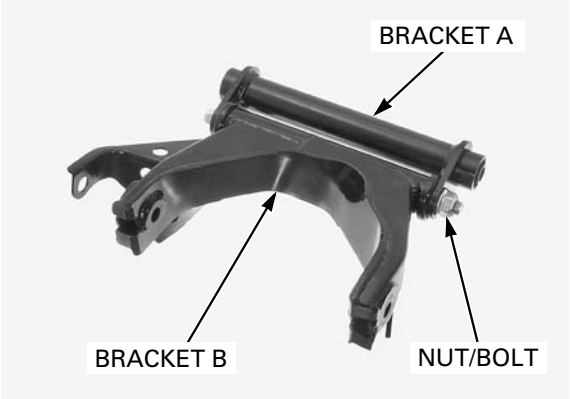

INSPECTION

Remove the dust seals and inner collar from the engine hanger bracket B.

Check the needle bearings in engine hanger bracket B for wear or damage.
Also check that the bearing outer race fits tightly in hanger bracket B.

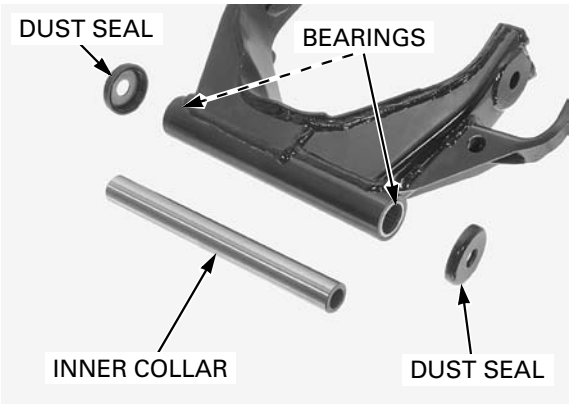

Check the bushings in the engine hanger bracket A and swing rod for wear, deterioration or damage.

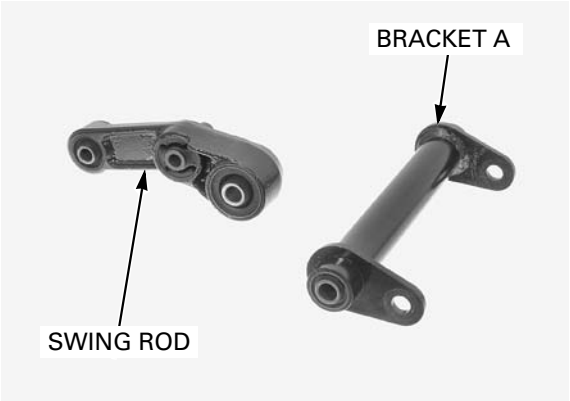

BEARING REPLACEMENT

Remove the engine hanger bracket B (page 8-4).

Remove the engine hanger needle bearings from the engine hanger bracket B using the special tool.

TOOL:
Bearing remover, 20 mm 07931-MA70000

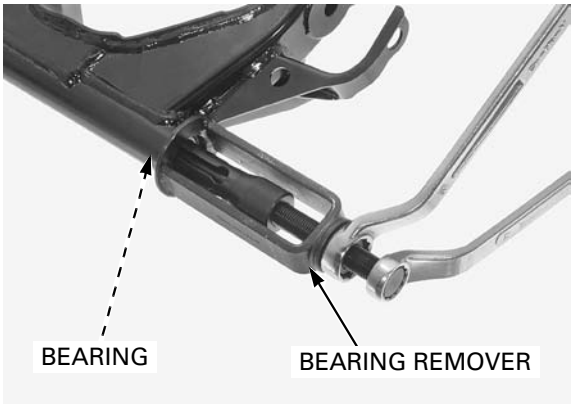

Pack the new needle bearings with grease.

Drive the needle bearings into the engine hanger bracket B with the marked side facing up until it is fully seated, using the special tools.

TOOLS:

Driver	**07749-0010000**
Attachment, 24 x 26 mm	**07746-0010700**
Pilot, 20 mm	**07746-0040500**

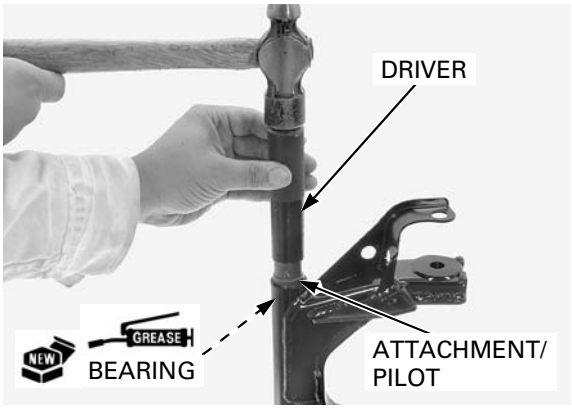

ENGINE INSTALLATION

- Route the wires, hoses and cables properly (page 1-19).

SWING ROD NUT (Upper)
42 N·m (4.3 kgf·m, 30 lbf·ft)

FRAME PIVOT NUT
78 N·m (8.0 kgf·m, 58 lbf·ft)

SWING ROD NUT (Lower)
52 N·m (5.3 kgf·m, 38 lbf·ft)

ENGINE HANGER BRACKET A

ENGINE BRACKET NUT
64 N·m (6.5 kgf·m, 47 lbf·ft)

NEW GREASE
NEEDLE BEARINGS

ENGINE HANGER BRACKET B

GREASE INNER COLLAR

ENGINE PIVOT NUT
78 N·m (8.0 kgf·m, 58 lbf·ft)

GREASE DUST SEALS

DISTANCE COLLAR

SWING ROD

Apply 1.0 – 2.0 g of grease to the inner collar, needle bearings and dust seal lips.

Install the inner collar and dust seals to the engine hanger bracket B.

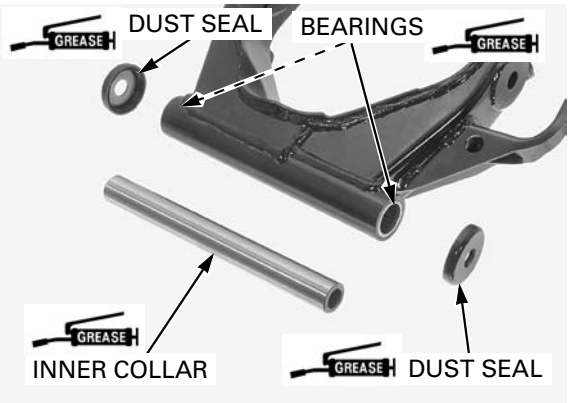

Install the engine hanger bracket B to the engine hanger bracket A and tighten the bolt/nut to the specified torque.

TORQUE: 64 N·m (6.5 kgf·m, 47 lbf·ft)

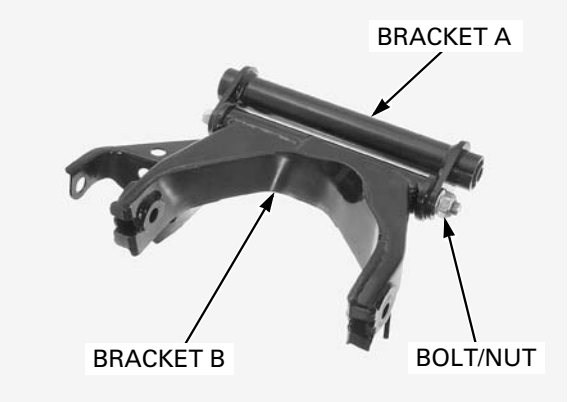

Install the swing rod into the frame.

Install the upper bolt/nut, lower bolt/washer/nut and tighten the nuts to the specified torque.

TORQUE:
Upper: 42 N·m (4.3 kgf·m, 31 lbf·ft)
Lower: 52 N·m (5.3 kgf·m, 38 lbf·ft)

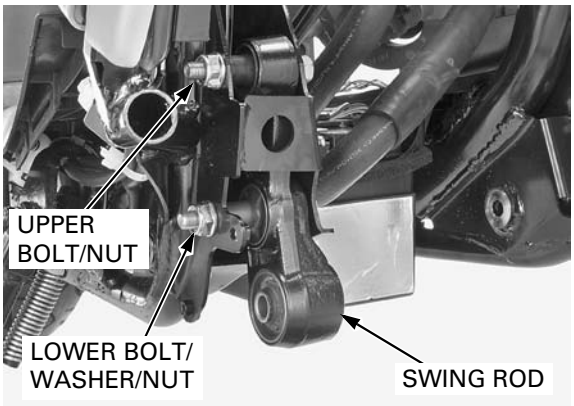

Install the engine hanger bracket to the frame and loosely install the bolt and nut.

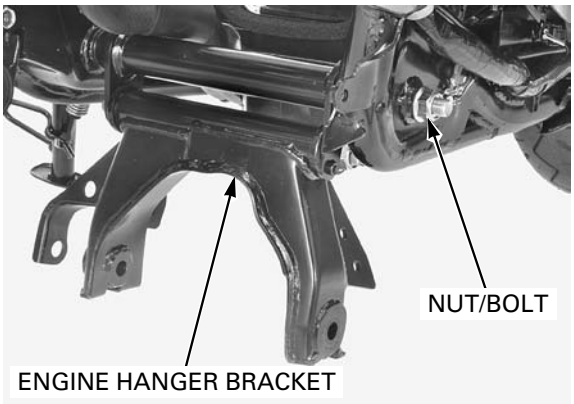

Coat new O-rings with molybdenum disulfide paste (SUMICO MOLYPASTE 500 or equivalent) and install them to the engine mounting bushing grooves.
Apply 0.5 – 0.7 g of molybdenum disulfide paste (SUMICO MOLYPASTE 500 or equivalent) to the center groove of the engine mounting bushing and install it.

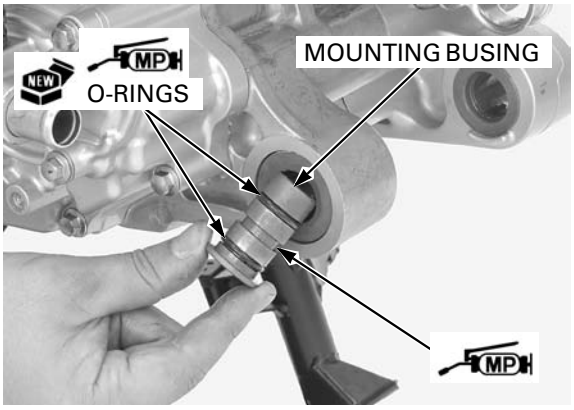

The jack height must be adjusted to relieve stress for ease of bolt installation.

Swing the engine hanger bracket by aligning the engine pivot bolt hole with the swing rod bolt hole.
Align the engine mounting bushing hole with the engine pivot hole, using a jack or other adjustable support.
Install the distance collar, engine pivot bolt and nut.

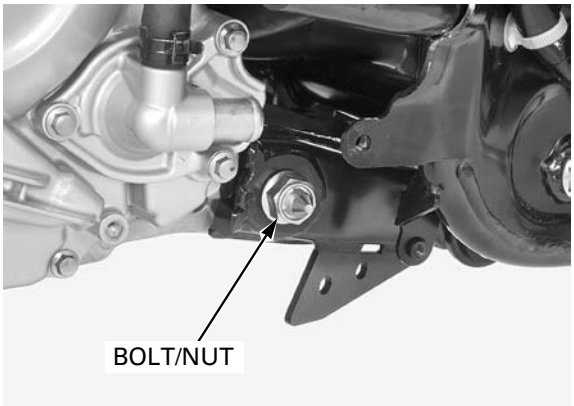

Install the shock absorbers (page 16-12).

Retract the centerstand and set the rear wheel on the ground to seat the pivots.

Tighten the engine pivot nut.

TORQUE: 78 N·m (8.0 kgf·m, 58 lbf·ft)

Tighten the frame pivot nut.

TORQUE: 78 N·m (8.0 kgf·m, 58 lbf·ft)

Install the remaining parts in the reverse order of removal.

TORQUE: Starter motor cable terminal nut
10 N·m (1.0 kgf·m, 7 lbf·ft)

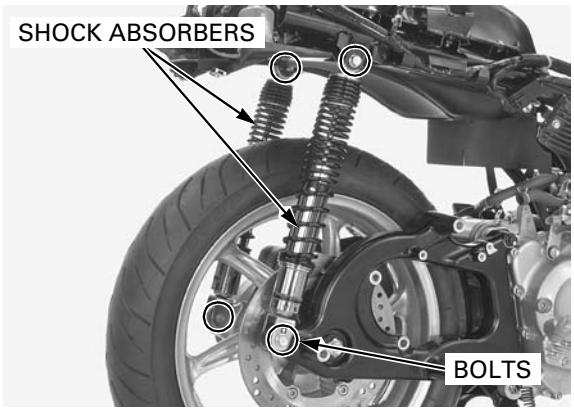

Install the following:

- air cleaner (page 6-52)
- fuel injector quick connect fitting (page 6-45)
- throttle cable (page 6-56)
- exhaust system (page 3-15)

Fill the crankcase with engine oil (page 4-11).
Fill and bleed the cooling system (page 7-6).

Install the following:

- under cover (page 3-9)
- floor side cover (page 3-8)
- rear fender A (page 3-7)
- body cover (page 3-6)
- grab rail (page 3-5)
- luggage box (page 3-5)
- maintenance lid (page 3-4)

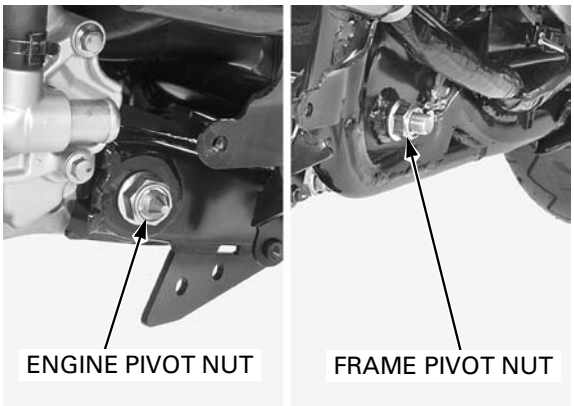

MEMO

9. CYLINDER HEAD/VALVES

COMPONENT LOCATION 9-2

SERVICE INFORMATION 9-3

TROUBLESHOOTING 9-5

CYLINDER COMPRESSION TEST 9-6

CYLINDER HEAD COVER REMOVAL 9-6

CAMSHAFT/ROCKER ARM REMOVAL 9-7

CYLINDER HEAD REMOVAL 9-11

CYLINDER HEAD DISASSEMBLY 9-12

VALVE GUIDE REPLACEMENT 9-14

VALVE SEAT INSPECTION/REFACING .. 9-15

CYLINDER HEAD ASSEMBLY 9-18

CYLINDER HEAD INSTALLATION 9-19

CAMSHAFT/ROCKER ARM INSTALLATION 9-21

CYLINDER HEAD COVER INSTALLATION 9-24

COMPONENT LOCATION

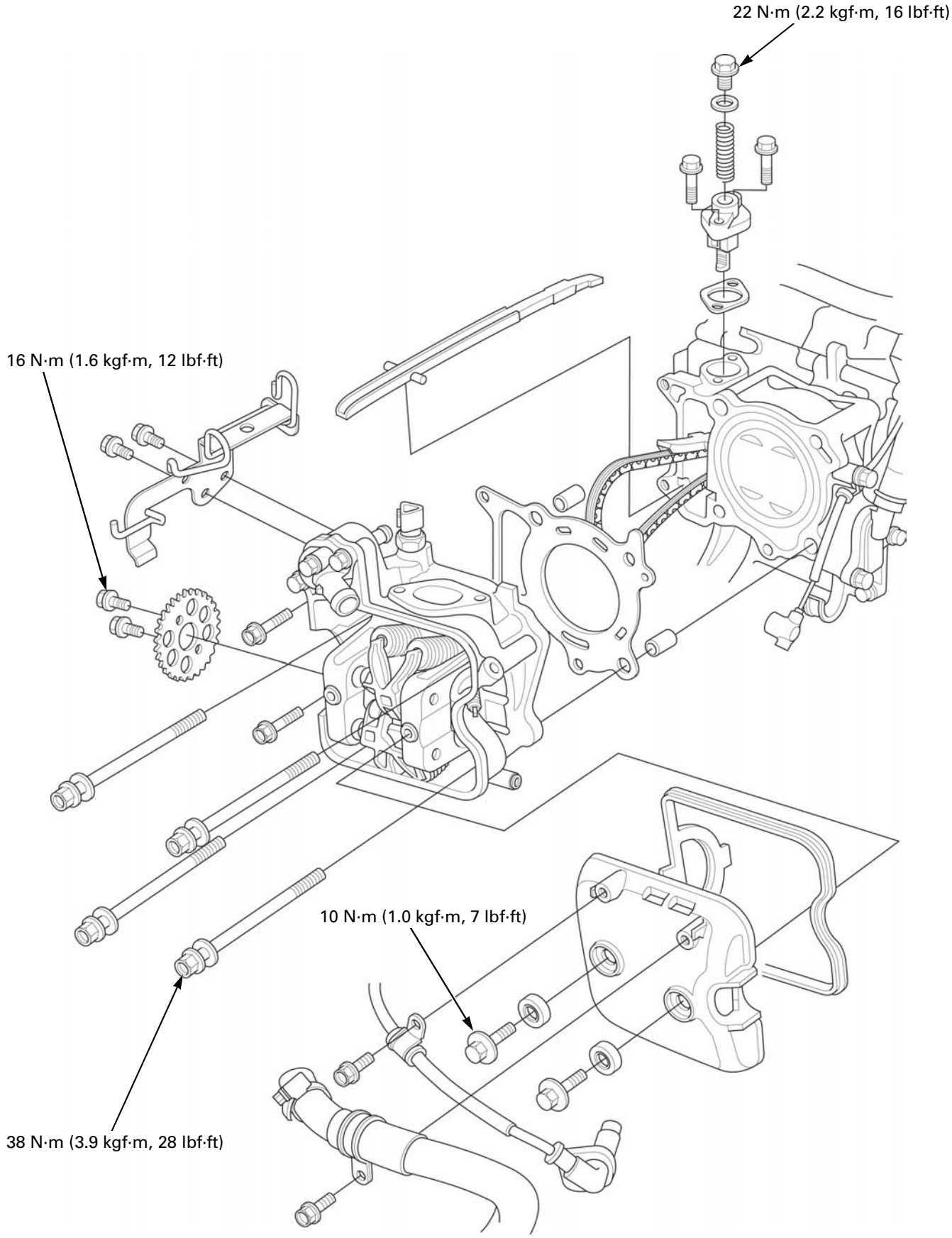

SERVICE INFORMATION

GENERAL

- This section covers service of the rocker arms, camshaft, valves and cylinder head. These parts can be serviced with the engine installed in the frame.
- When disassembling, mark and store the disassembled parts to ensure that they are reinstalled in their original locations.
- Clean all disassembled parts with cleaning solvent and dry them by blowing them off with compressed air before inspection.
- The rocker arm and camshaft lubricating oil is fed through the oil passages in the cylinder head and head cover. Clean the oil passages before assembling.
- Be careful not to damage the mating surfaces when removing the cylinder head cover and cylinder head.

SPECIFICATIONS

Unit: mm (in)

ITEM			STANDARD	SERVICE LIMIT
Cylinder compression at 450 min^{-1} (rpm)			1,569 kPa (16.0 kgf/cm^2, 228 psi)	–
Camshaft	Cam lobe height	IN	39.325 – 39.485 (1.5482 – 1.5545)	39.295 (1.5470)
		EX	37.034 – 37.194 (1.4580– 1.4643)	37.034 (1.4580)
Cylinder head warpage			–	0.05 (0.002)
Rocker arm	Arm I.D.	IN/EX	13.000 – 13.018 (0.5118 – 0.5125)	13.10 (0.516)
	Shaft O.D.	IN/EX	12.966 – 12.984 (0.5105 – 0.5112)	12.91 (0.508)
	Arm-to-shaft clearance	IN/EX	0.016 – 0.052 (0.0006 – 0.0020)	0.08 (0.003)
	Side spring free length		17.1 (0.67)	15.5(0.61)
Valve, valve guide	Valve clearance	IN	0.16 ± 0.03 (0.006 ± 0.001)	–
		EX	0.22 ± 0.03 (0.009 ± 0.001)	–
	Valve stem O.D.	IN	4.475 – 4.490 (0.1762 – 0.1768)	4.465 (0.1758)
		EX	4.465 – 4.480 (0.1758 – 0.1764)	4.455 (0.1754)
	Valve guide I.D.	IN/EX	4.500 – 4.512 (0.1772 – 0.1776)	4.54 (0.179)
	Stem-to-guide clearance	IN	0.010 – 0.037 (0.0004 – 0.0015)	0.08 (0.003)
		EX	0.020 – 0.047 (0.0008 – 0.0019)	0.09 (0.004)
	Valve guide projection above cylinder head	IN	11.20 – 11.50 (0.441 – 0.453)	–
		EX	12.20 – 12.50 (0.480 – 0.492)	–
	Valve seat width	IN/EX	0.90 – 1.10 (0.035 – 0.043)	1.5 (0.06)
Valve spring free length		IN/EX	37.09 (1.460)	35.6 (1.40)

TORQUE VALUES

Cylinder head bolt	38 N·m (3.9 kgf·m, 28 lbf·ft)	Apply engine oil to the threads and seating surface.
Cam stopper plate bolt	12 N·m (1.2 kgf·m, 9 lbf·ft)	Apply locking agent to the threads.
Cam sprocket bolt	16 N·m (1.6 kgf·m, 12 lbf·ft)	Apply locking agent to the threads.
Cam chain tensioner lifter sealing bolt	22 N·m (2.2 kgf·m, 16 lbf·ft)	
Timing hole cap	6 N·m (0.6 kgf·m, 4.4 lbf·ft)	Apply engine oil to the threads and seating surface.
Cylinder head cover bolt	10 N·m (1.0 kgf·m, 7 lbf·ft)	

TOOLS

Valve spring compressor 07757-0010000 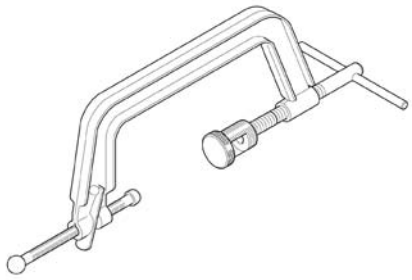	Valve spring compressor attachment 07959-KM30101 	Valve guide reamer, 4.5 mm 07HMH-ML00101 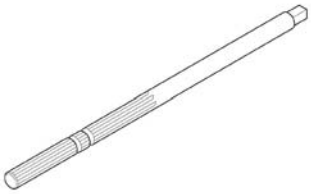
Valve guide driver, 4.3 mm 07HMD-ML00101 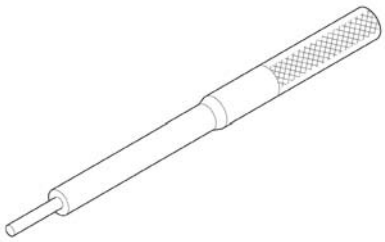	Cutter holder, 4.5 mm 07781-0010600 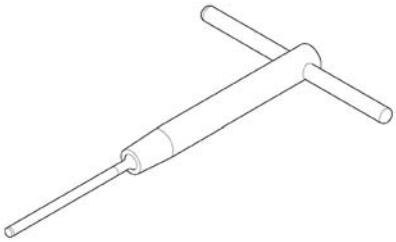	Seat cutter, 27.5 mm (45° IN) 07780-0010200
Seat cutter, 24 mm (45° EX) 07780-0010600 	Flat cutter, 29 mm (32° IN) 07780-0013400 	Flat cutter, 25 mm (32° EX) 07780-0012000
Interior cutter, 26 mm (60° IN) 07780-0014500 	Interior cutter, 22 mm (60° EX) 07780-0014202 	

TROUBLESHOOTING

- Engine top-end problems usually affect engine performance. These problem can be diagnosed by a compression test, or by tracing top-end noise with a sounding rod or stethoscope.
- If the performance is poor at low speeds, check for white smoke in the crankcase breather hose. If the hose is smoky, check for a seized piston ring (page 10-5).

Compression too low, hard starting or poor performance at low speed

- Valves:
  - Incorrect valve adjustment
  - Burned or bent valve
  - Incorrect valve timing
  - Broken valve spring
  - Uneven valve seating
  - Valve stuck open
- Cylinder head:
  - Leaking or damaged head gasket
  - Warped or cracked cylinder head
  - Loose spark plug
- Cylinder/piston problem (page 10-3).

Compression too high, overheating or knocking

- Excessive carbon build-up on piston head or on combustion chamber

Excessive smoke

- Worn valve stem or valve guide
- Damaged stem seal
- Cylinder/piston problem (page 10-3).

Excessive noise

- Incorrect valve adjustment
- Sticking valve or broken valve spring
- Excessive worn valve seat
- Worn or damaged camshaft
- Worn cam chain
- Worn cam sprocket teeth
- Worn rocker arm and/or shaft
- Worn or damaged cam chain tensioner
- Cylinder/piston problem (page 10-3).

Rough idle

- Low cylinder compression

CYLINDER COMPRESSION TEST

Remove the maintenance lid (page 3-4).

Warm up the engine to normal operating temperature.

Stop the engine and remove the spark plug cap and spark plug (page 4-7).

Install a compression gauge into the spark plug hole.

To avoid discharging the battery, do not operate the starter motor for more than 7 seconds.

Open the throttle all the way and crank the engine with the starter motor until the gauge reading stops rising. The maximum reading is usually reached within 4 – 7 seconds.

COMPRESSION PRESSURE:
1,569 kPa (16.0 kg/cm^2, 228 psi) at 450 min^{-1} (rpm)

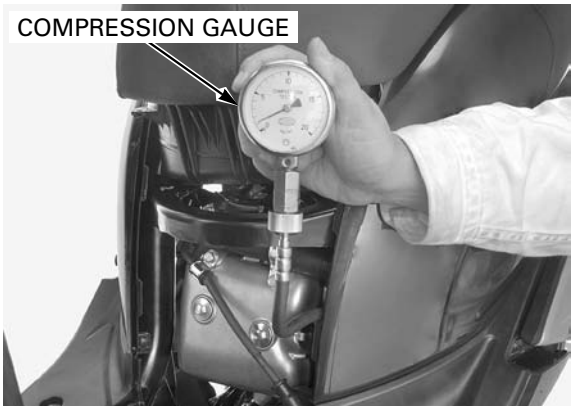

Low compression can be caused by:

- blown cylinder head gasket
- improper valve adjustment
- valve leakage
- worn piston ring or cylinder

High compression can be caused by:

- carbon deposits in the combustion chamber or on the piston head

CYLINDER HEAD COVER REMOVAL

Remove the following:

- maintenance lid (page 3-4)
- luggage box (page 3-5)
- grab rail (page 3-5)
- body cover (page 3-6)

Disconnect the spark plug cap.

Remove the following:

- bolt and spark plug wire clamp
- bolt and water hose clamp

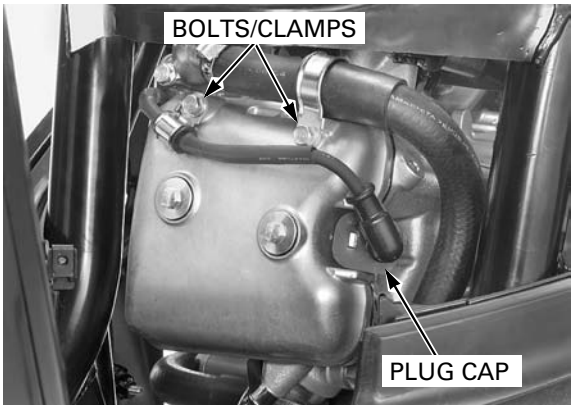

- two bolts and special washers
- cylinder head cover
- rubber seal

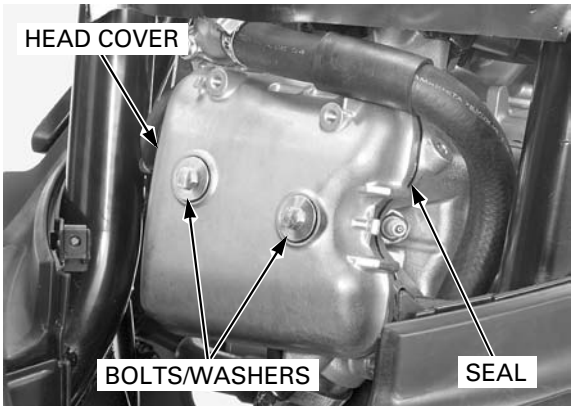

CAMSHAFT/ROCKER ARM REMOVAL

CAM SPROCKET REMOVAL

Remove the following:

– cylinder head cover (page 9-6)
– belt case air cleaner housing (page 4-16)

Remove the timing hole cap and O-ring from the right crankcase cover.

Rotate the drive pulley (crankshaft) counterclockwise and align the "T" mark on the flywheel with the index line in the right crankcase cover.
The index line on the cam sprocket must be flush with the cylinder head surface as shown.

Make sure the piston is at TDC (Top Dead Center) of the compression stroke by moving the rocker arms.

If the exhaust rocker arm is tight, rotate the crankshaft one full turn (360°) and align the "T" mark again.

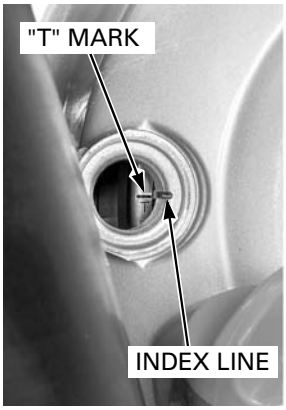

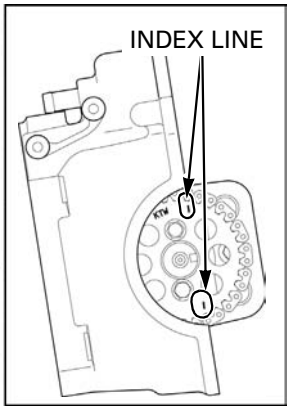

Remove the sealing bolt, sealing washer and spring from the cam chain tensioner lifter.

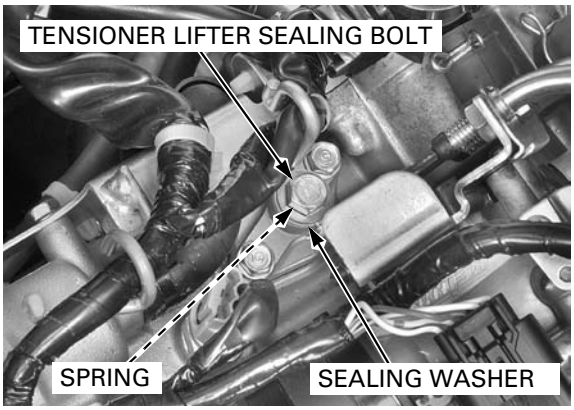

Remove the two bolts and cam chain tensioner lifter.
Remove the gasket.

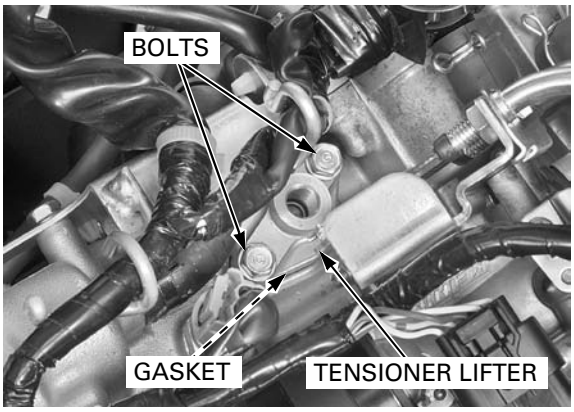

Place a shop towel into the cylinder head opening to prevent fasteners from falling into the crankcase.

Remove the two bolts while holding the drive pulley (crankshaft), and the cam sprocket off of the camshaft.

Remove the cam sprocket from the cam chain. Attach a piece of wire to the cam chain to prevent it from falling into the crankcase.

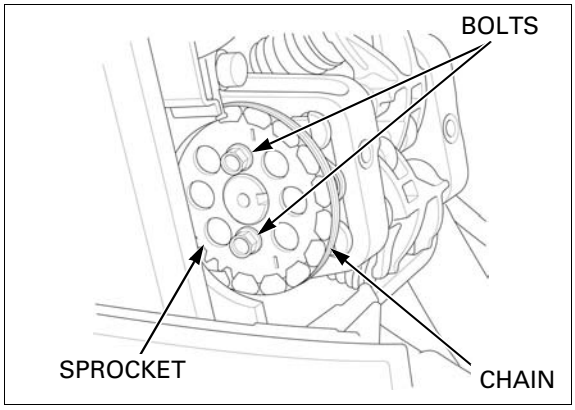

CAMSHAFT/ROCKER ARM REMOVAL

Shift the rocker arms to the spring side and remove the shims.

- Do not allow the shims to fall into the crankcase.
- Mark all shims to ensure correct reassembly in their original locations.
- The shims can be easily removed with tweezers or a magnet.

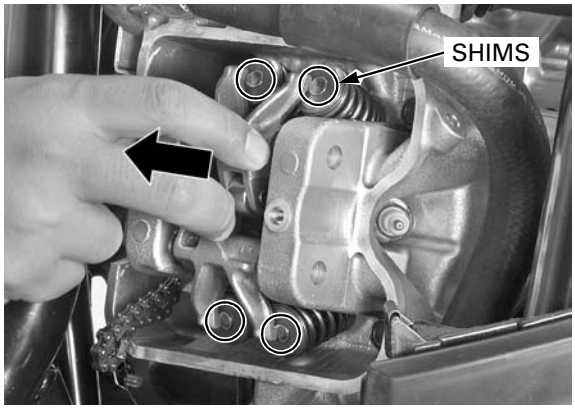

Remove the bolt and stopper plate.

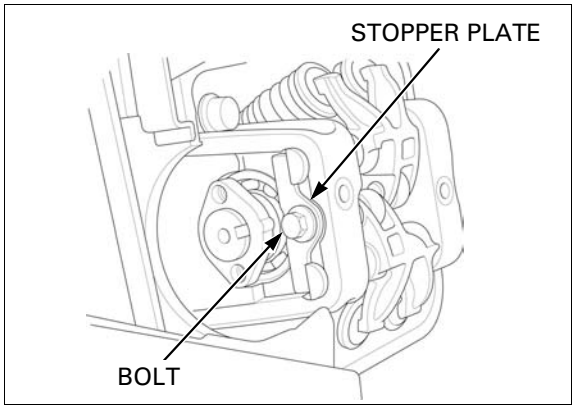

Remove the camshaft while pressing down the valve side of the rocker arm.

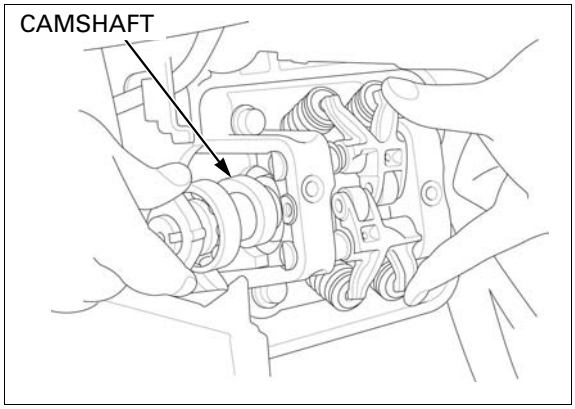

Remove the rocker arm shafts, rocker arms and springs.

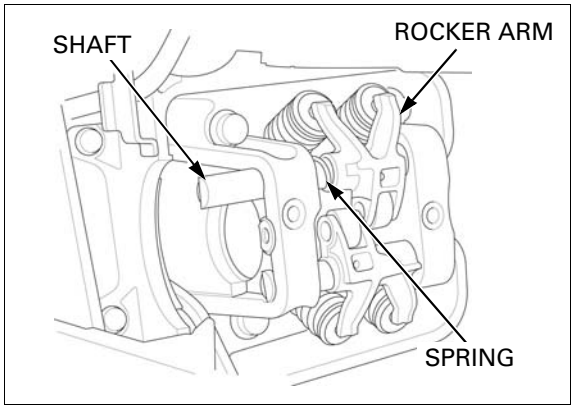

INSPECTION

CAM SPROCKET

Check the cam sprocket for wear or damage.

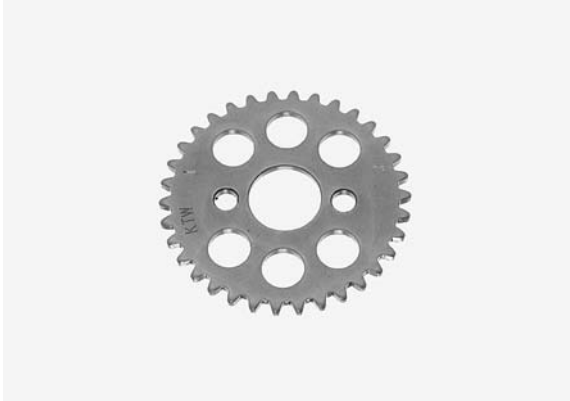

CAMSHAFT

Check the camshaft bearing for wear or damage.
Turn the bearing outer race with your finger.
The bearing should turn smoothly and quietly.
Also check that the bearing inner race fits tightly on the camshaft.

Check the cam lobes for scoring, scratches or evidence of insufficient lubrication.

Measure each cam lobe height using a micrometer.

SERVICE LIMITS: IN: 39.295 mm (1.5470 in)
EX: 37.034 mm (1.4580 in)

Check the camshaft boss for wear or damage.

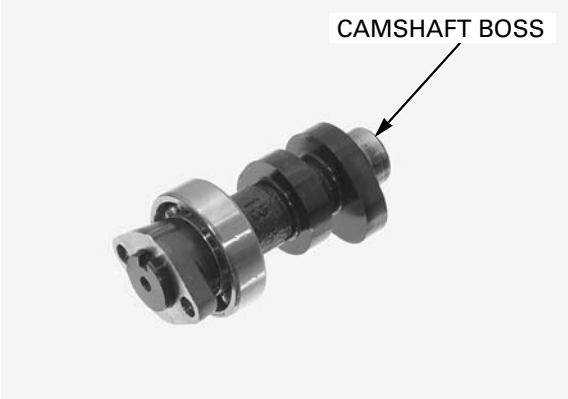

Check the camshaft holder hole for wear or damage.

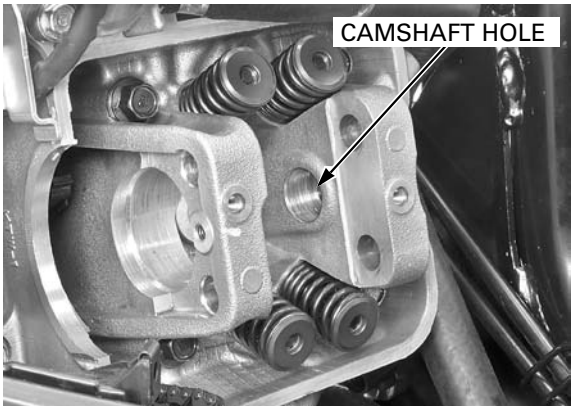

ROCKET ARM/SHAFT

Inspect the sliding surfaces of the rocker arms and shafts for wear or damage.
Check the oil holes for clogs.

Measure the O.D. of each shaft at the rocker arm sliding areas and record it.

SERVICE LIMIT: 12.91 mm (0.508 in)

Measure the I.D. of each rocker arm and record it.

SERVICE LIMIT: 13.10 mm (0.516 in)

Subtract each rocker arm shaft O.D. from the corresponding rocker arm I.D. to obtain the arm-to-shaft clearance.

SERVICE LIMIT: 0.08 mm (0.003 in)

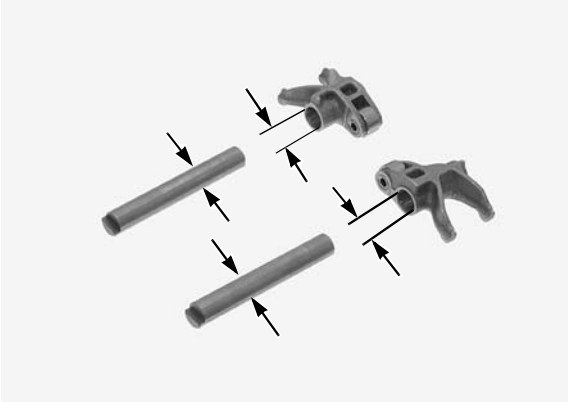

SIDE SPRING

Measure the free length of the springs.

SERVICE LIMIT: 15.5 mm (0.61 in)

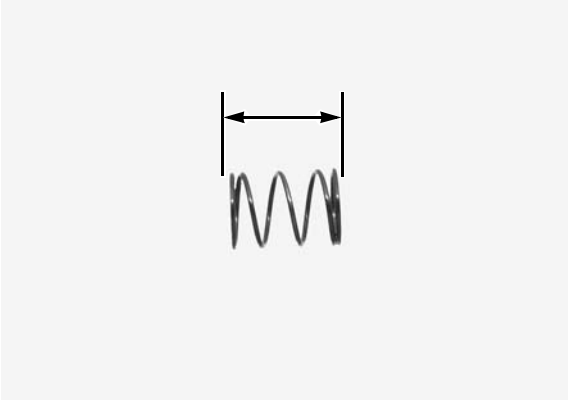

CYLINDER HEAD REMOVAL

Remove the following:

- exhaust system (page 3-15)
- intake manifold (page 6-64)
- thermostat (page 7-9)
- ECT sensor (page 6-74)
- O_2 sensor (page 6-76)
- cylinder head cover (page 9-6)
- cam sprocket (page 9-7)
- camshaft/rocker arm (if the cylinder head is disassembled) (page 9-7)
- spark plug (page 4-7)

Drain the coolant (page 7-7).
Drain the engine oil (page 4-11).

Remove the main wire harness wire band, CKP sensor wire band, ignition coil wire band and spark plug wire band from the clamp stay.

Remove the two bolts and clamp stay.

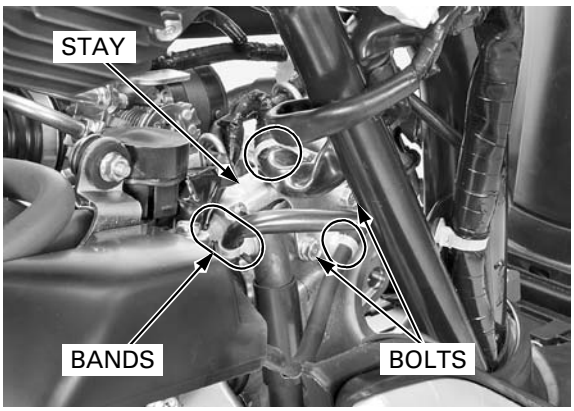

Disconnect the water hose.

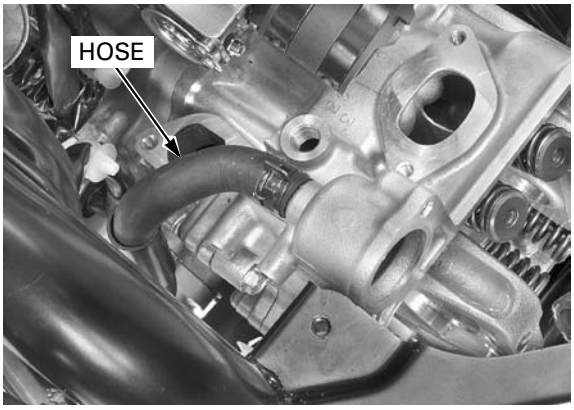

Remove the two 6 mm bolts.

Remove the four 9 mm bolts and washers in 2 or 3 steps in a crisscross pattern.

Do not strike the cylinder head too hard and do not damage the mating surface with a screwdriver.

Remove the cylinder head.

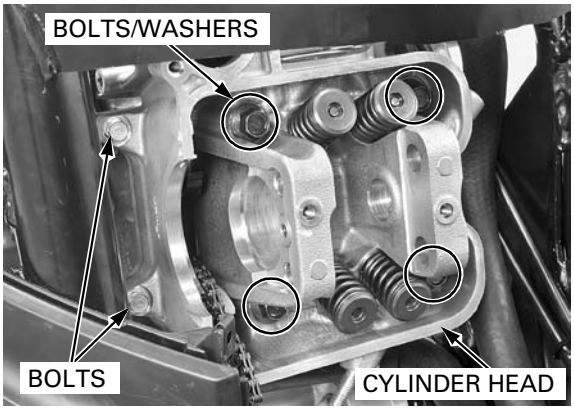

Remove the gasket and two dowel pins.

Remove the cam chain guide.

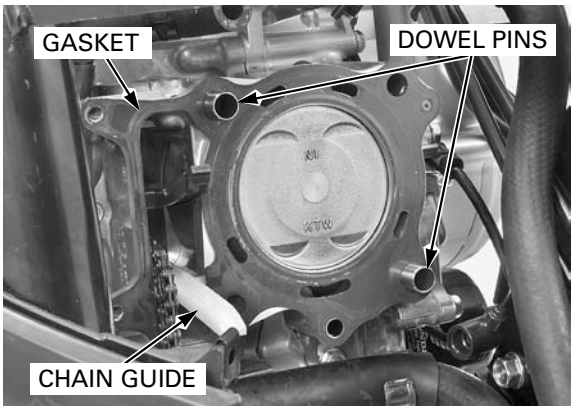

CYLINDER HEAD DISASSEMBLY

Remove the following:

- cylinder head (page 9-11)
- camshaft/rocker arm (page 9-7)

To prevent loss of tension, do not compress the valve springs more than necessary.

Remove the valve spring cotters using the spring compressor.

TOOLS:

Valve spring compressor	**07757-0010000**
Valve spring compressor attachment	**07959-KM30101**

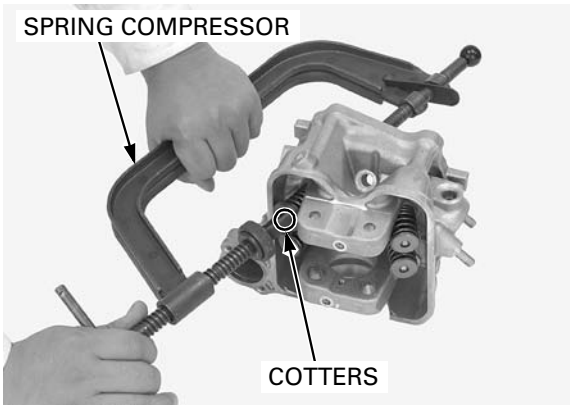

Mark all the parts so they can be placed back in their original locations.

Remove the following:

- spring retainer
- valve spring
- valve
- stem seal
- spring seat

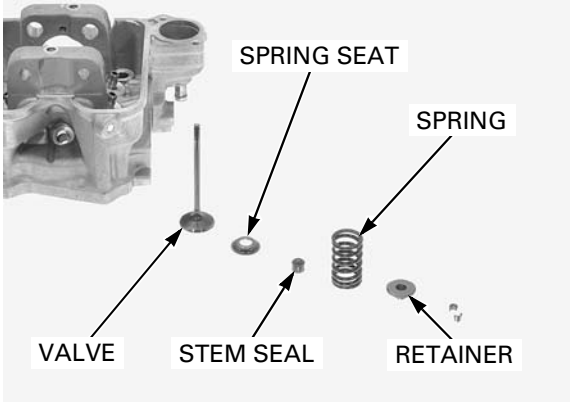

INSPECTION

CYLINDER HEAD

Be careful not to damage the valve seat and gasket surfaces.

Remove the carbon deposits from the combustion chamber.

Check the spark plug hole and valve areas for cracks.

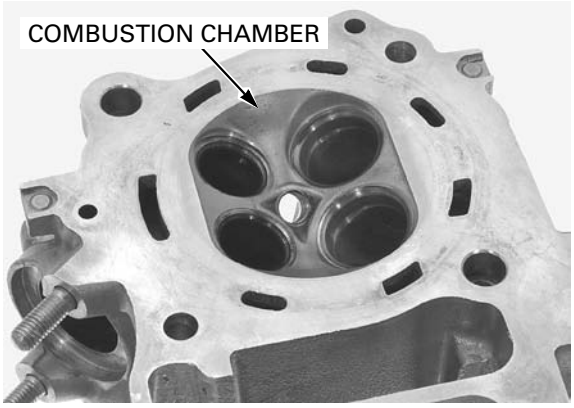

Check the cylinder head for warpage with a straight edge and feeler gauge across the stud holes.

SERVICE LIMIT: 0.05 mm (0.002 in)

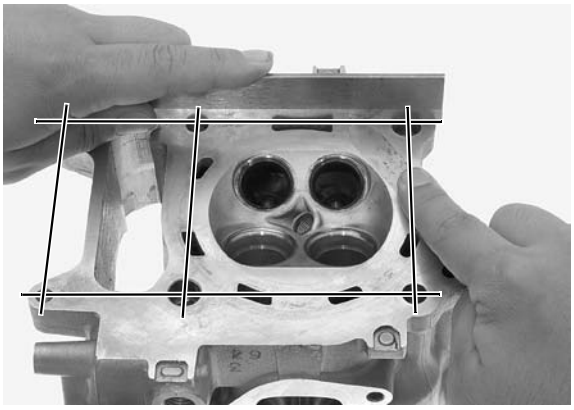

VALVE SPRING

Check the valve springs for fatigue or damage.
Measure the valve spring free length.

SERVICE LIMIT: IN/EX: 35.6 mm (1.40 in)

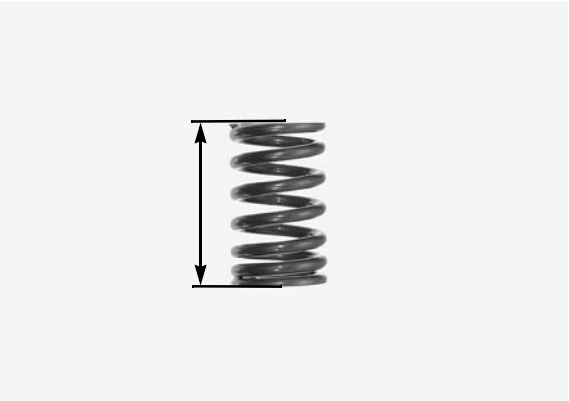

VALVE/VALVE GUIDE

Check that the valve moves smoothly in the guide.
Check the valves for bending, burning or abnormal wear.

Measure each valve stem O.D. and record it.

SERVICE LIMITS: IN: 4.465 mm (0.1758 in)
EX: 4.455 mm (0.1754 in)

Ream the guides to remove any carbon build-up before measuring the guide.
Insert the reamer from the combustion chamber side of the head and always rotate the reamer clockwise.

TOOL:
Valve guide reamer, 4.5 mm 07HMH-ML00101

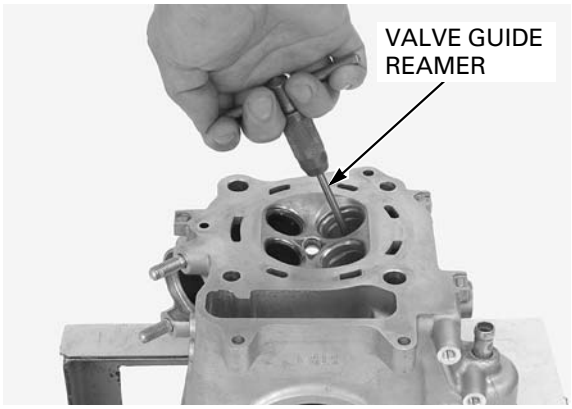

Measure each valve guide I.D. and record it.

SERVICE LIMIT: IN/EX: 4.54 mm (0.179 in)

Subtract each valve stem O.D. from the corresponding guide I.D. to obtain the stem-to-guide clearance.

SERVICE LIMITS: IN: 0.08 mm (0.003 in)
EX: 0.09 mm (0.004 in)

Inspect and reface the valve seats whenever the valve guides are replaced (page 9-15).

If the stem-to-guide clearance exceeds the service limit, determine if a new guide with standard dimensions would bring the clearance within tolerance. If so, replace any guides as necessary and ream to fit.
If the stem-to-guide clearance exceeds the service limit with a new guide, also replace the valve.

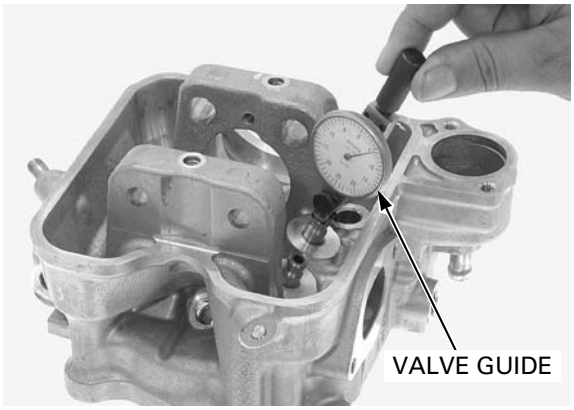

CAM CHAIN GUIDE/TENSIONER SLIDER

Check the cam chain tensioner slider in the crankcase for excessive wear or damage.

Check the cam chain guide for excessive wear or damage.

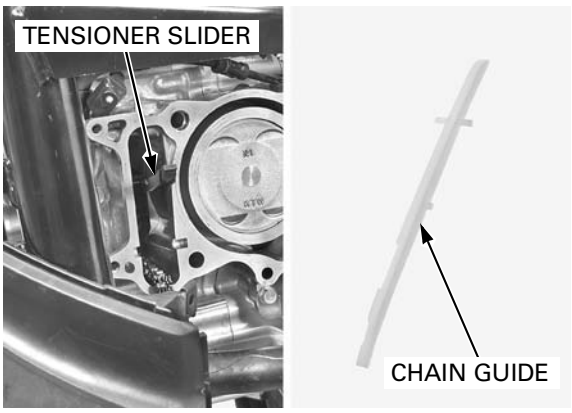

VALVE GUIDE REPLACEMENT

Mark new valve guides at the specified height indicated below, using a marker.
Chill new valve guides in a freezer for about 1 hour.

Be sure to wear heavy gloves to avoid burns when handling the heated cylinder head.

Heat the cylinder head to 130 – 140°C (275 – 290°F) with a hot plate or oven. Use temperature indicator sticks, available from welding supply stores, to be sure the cylinder head is heated to the proper temperature

- Using a torch to heat the cylinder head may cause warpage.

Support the cylinder head and drive the valve guides out of the cylinder head from the combustion chamber side.

TOOL:
Valve guide driver, 4.3 mm 07HMD-ML00101

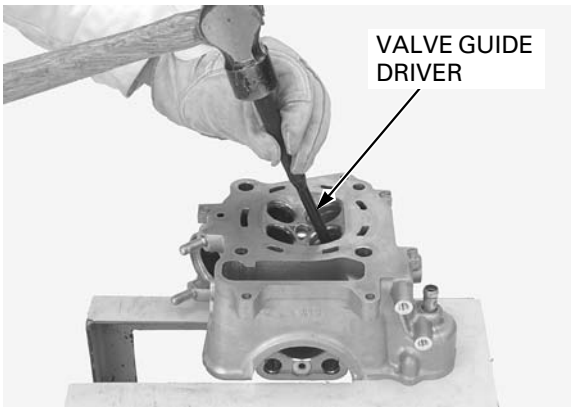

Take out new valve guides from the freezer.
While the cylinder head is still heated, drive new valve guides into the cylinder head from the camshaft side until the exposed height is at the specified value (at the mark).

TOOL:
Valve guide driver, 4.3 mm 07HMD-ML00101

VALVE GUIDE PROJECTION:
IN: 11.20 – 11.50 mm (0.441 – 0.453 in)
EX: 12.20 – 12.50 mm (0.480 – 0.492 in)

Let the cylinder head cool to room temperature.

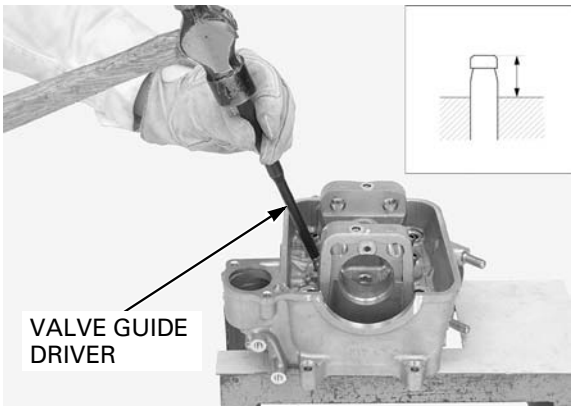

Use cutting oil on the reamer during this operation. Take care not to tilt or learn the reamer in the guide while reaming.

Ream the new valve guides.
Insert the reamer from the combustion chamber side of the cylinder head and always rotate the reamer clockwise.

TOOL:
Valve guide reamer, 4.5 mm 07HMH-ML00101

Clean the cylinder head thoroughly to remove any metal particles after reaming and reface the valve seats (page 9-16).

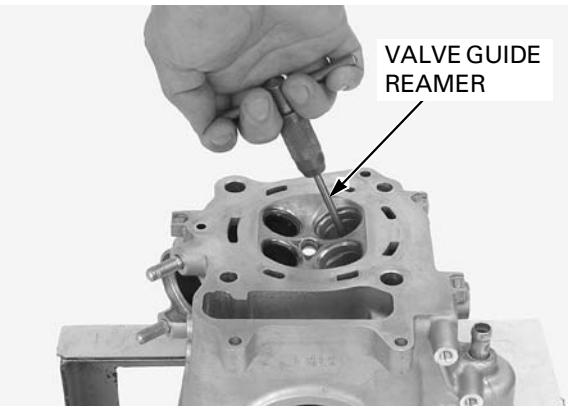

VALVE SEAT INSPECTION/REFACING

INSPECTION

Clean the intake and exhaust valves thoroughly to remove carbon deposits.

Apply a light coat of Prussian Blue to each valve seat.
Tap the valve against the valve seat several times without rotating the valve, to check for proper valve seat contact.

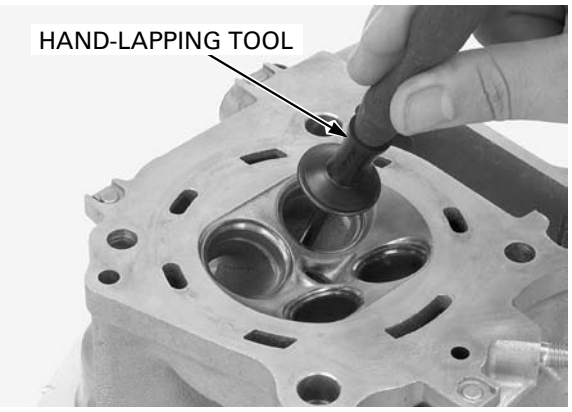

The valve cannot be ground. If the valve face is burned or badly worn or if it contacts the seat unevenly, replace the valve.

Remove the valve and inspect the valve seat face.
The valve seat contact should be within the specified width and even all around the circumference.

STANDARD: 0.90 – 1.10 mm (0.035 – 0.043 in)
SERVICE LIMIT: 1.5 mm (0.06 in)

If the seat width is not within specification, reface the valve seat.

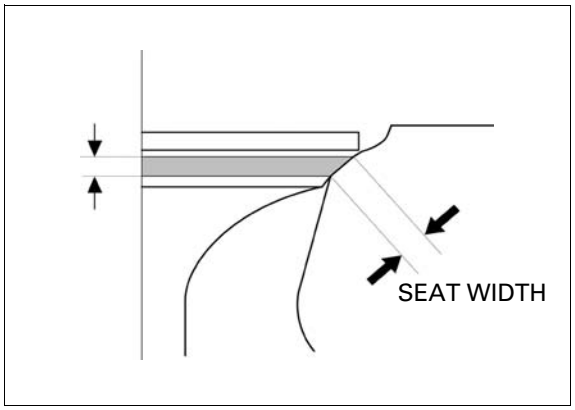

Inspect the valve seat face for:
- Damaged face:
  – Replace the valve and reface the valve seat.
- Uneven seat width:
  – Replace the valve and reface the valve seat.

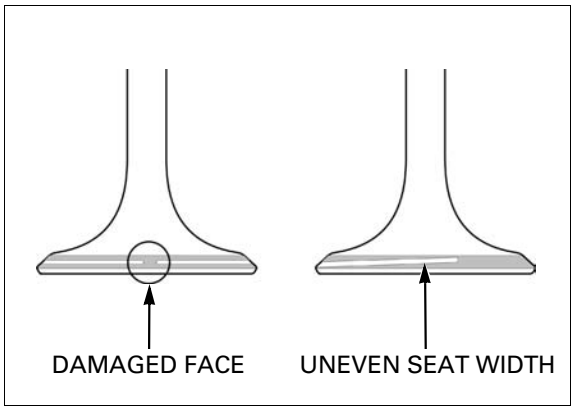

- Contact area (too high or too low)
  – Reface the valve seat.

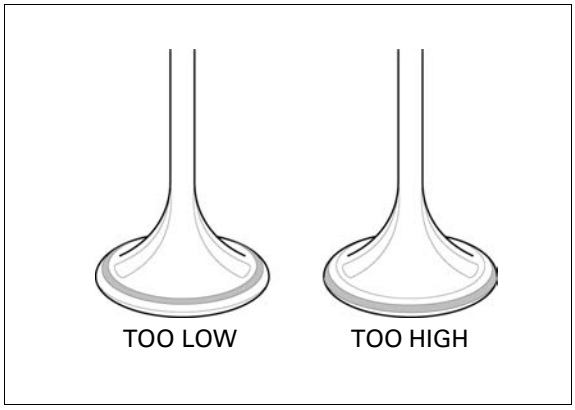

REFACING

Follow the refacing manufacturer's operating instructions.

Valve seat cutters/grinders or equivalent valve seat refacing equipment are recommended to correct worn valve seats.

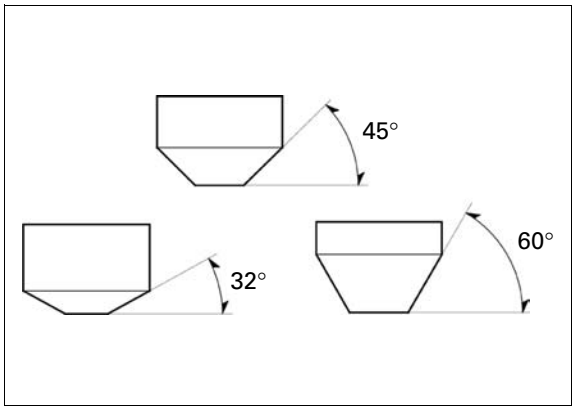

If the contact area is too high on the valve, the seat must be lowered using a 32° flat cutter.

If the contact area is too low on the valve, the seat must be raised using a 60° interior cutter.

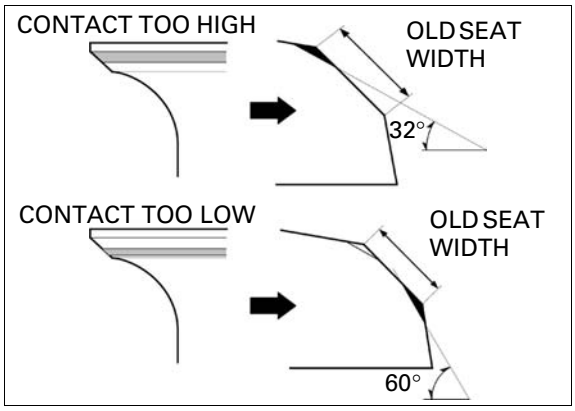

Reface the seat with a 45° cutter whenever a valve guide is replaced.

Use a 45° seat cutter to remove any roughness or irregularities from the seat.

TOOLS:

Seat cutter, 27.5 mm (45° IN)	**07780-0010200**
Seat cutter, 24 mm (45° EX)	**07780-0010600**
Cutter holder, 4.5 mm	**07781-0010600**

or equivalent commercially available

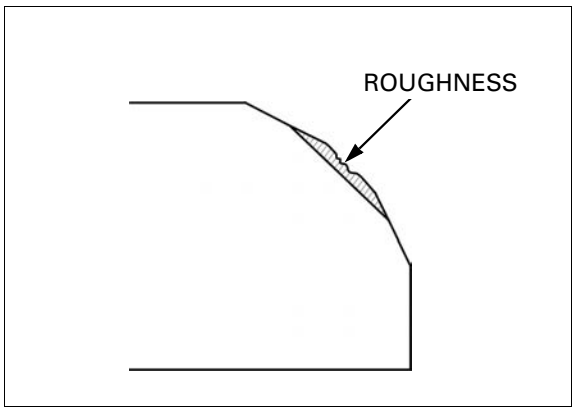

Using a 32° flat cutter, remove 1/4 of the existing valve seat material.

TOOLS:

Flat cutter, 29 mm (32° IN)	**07780-0013400**
Flat cutter, 25 mm (32° EX)	**07780-0012000**
Cutter holder, 4.5 mm	**07781-0010600**

or equivalent commercially available

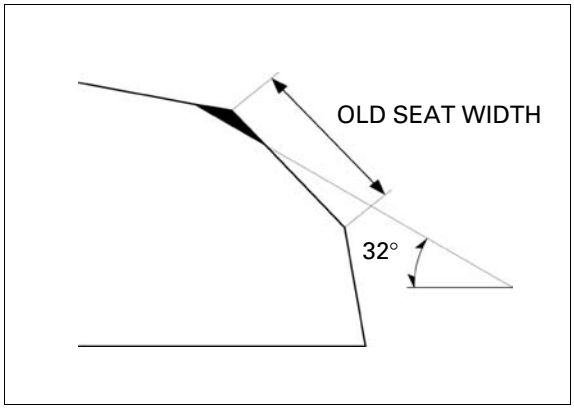

Using a 60° interior cutter, remove 1/4 of the existing valve seat material.

TOOLS:

Interior cutter, 26 mm (60° IN)	**07780-0014500**
Interior cutter, 22 mm (60° EX)	**07780-0014202**
Cutter holder, 4.5 mm	**07781-0010600**

or equivalent commercially available

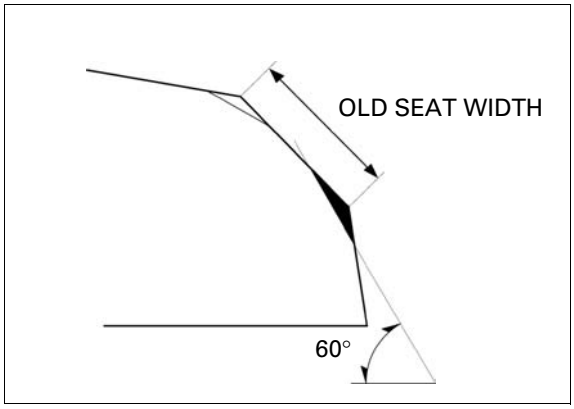

Using a 45° seat cutter, cut the seat to the proper width.

VALVE SEAT WIDTH: 0.90 – 1.10 mm (0.035 – 0.043 in)

Make sure that all pitting and irregularities are removed.

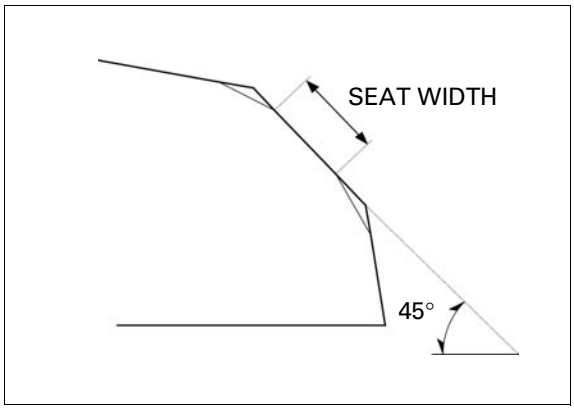

After cutting the seat, apply lapping compound to the valve face, and lap the valve using light pressure.

- Excessive lapping pressure may deform or damage the seat.
- Change the angle of the lapping tool frequently to prevent uneven seat wear.
- Do not allow lapping compound to enter the guides.

After lapping, wash any residual compound off the cylinder head and valve and recheck the seat contact.

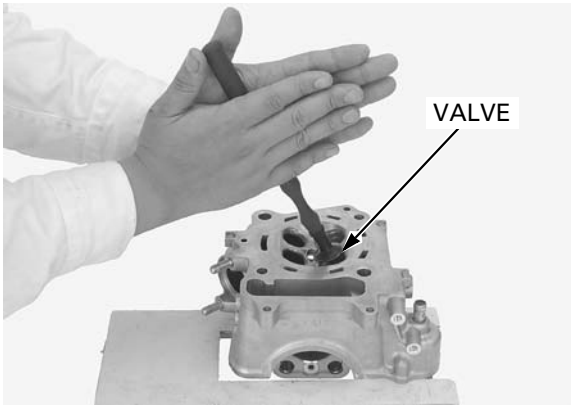

CYLINDER HEAD ASSEMBLY

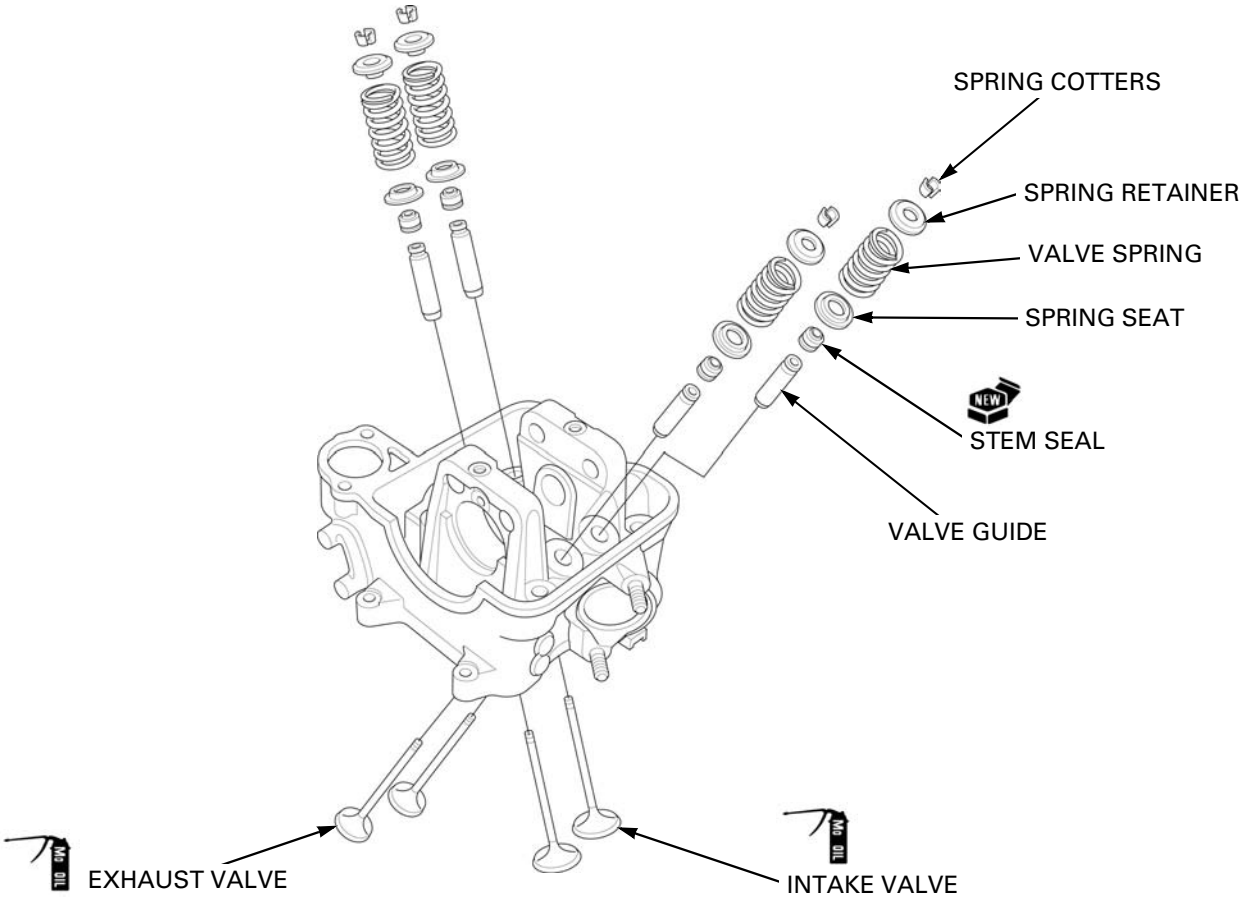

Blow out the oil passages in the cylinder head with compressed air.

Apply engine oil to the fitting area of new stem seals.
Install the spring seats and the stem seals.

Lubricate the valve stem sliding surface with molybdenum oil solution.
Insert the valve into the guide while turning it slowly to avoid damaging to the stem seal.

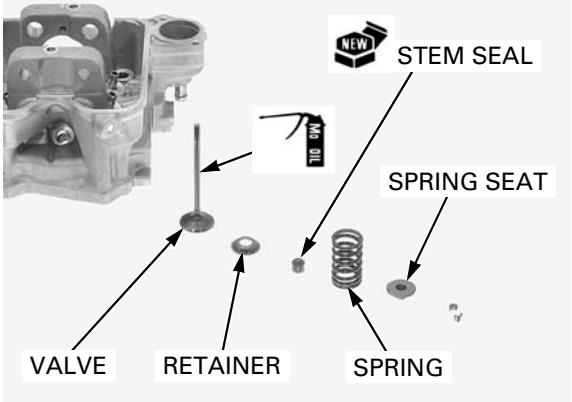

Install the valve spring with the tightly wound coils facing the combustion chamber.

Install the spring retainer.

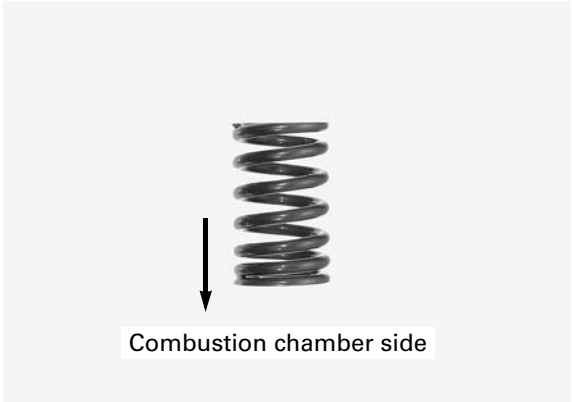

To prevent loss of tension, do not compress the valve springs more than necessary.

Install the valve spring cotters using the valve spring compressor.

TOOLS:

Valve spring compressor	**07757-0010000**
Valve spring compressor attachment	**07959-KM30101**

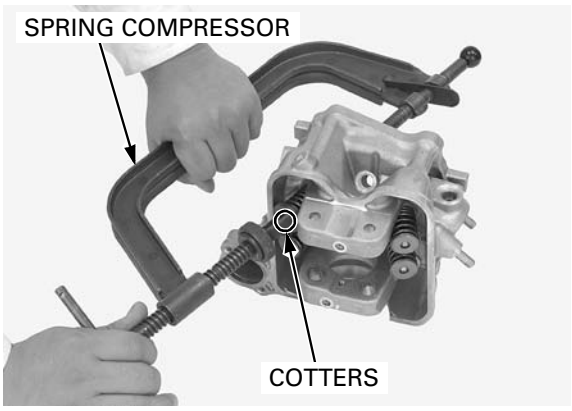

Support the cylinder head so the valve heads will not contact anything that cause damage.

Tap the valve stems gently with two plastic hammers to seat the cotters firmly.

Install the cylinder head (page 9-19).

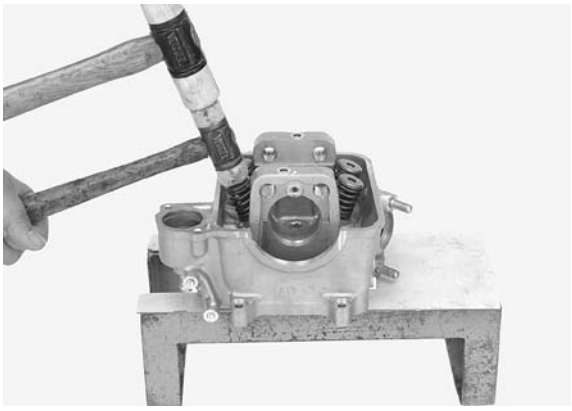

CYLINDER HEAD INSTALLATION

Be careful not to damage the mating surfaces.

Clean the mating surfaces of the cylinder head and cylinder thoroughly.

Blow out the oil passages in the cylinder head with compressed air.

Install the cam chain guide by aligning it bosses with the grooves in the cylinder.

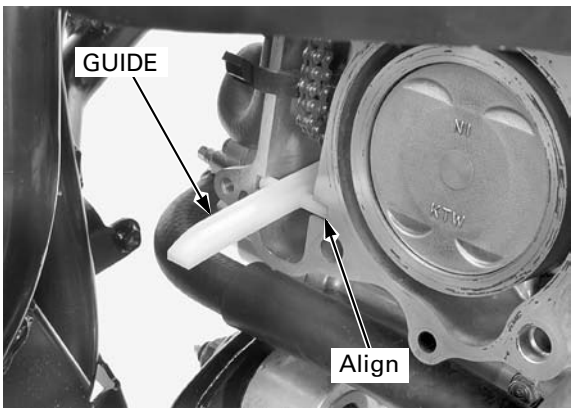

Install the two dowel pins and a new gasket.

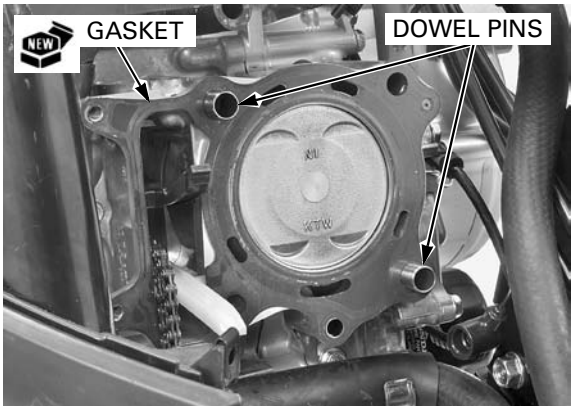

Route the cam chain through the cylinder head and install the cylinder head.

Apply molybdenum oil solution to the thread and seating surface of the cylinder head 9 mm bolts and washers.

Install the 9 mm bolts, washers and tighten the bolts in a crisscross pattern in 2 or 3 steps to the specified torque.

TORQUE: 38 N·m (3.9 kgf·m, 28 lbf·ft)

Install the two cylinder head 6 mm bolts and tighten them.

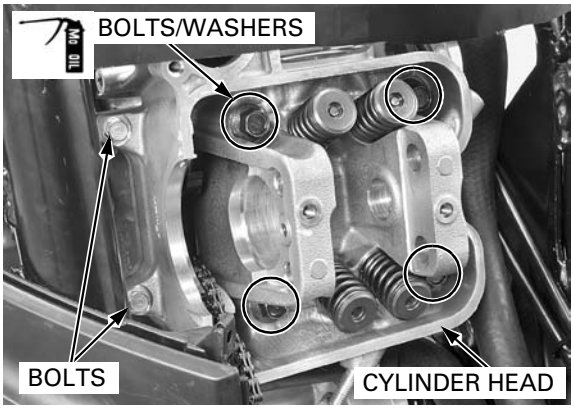

Connect the water hose.

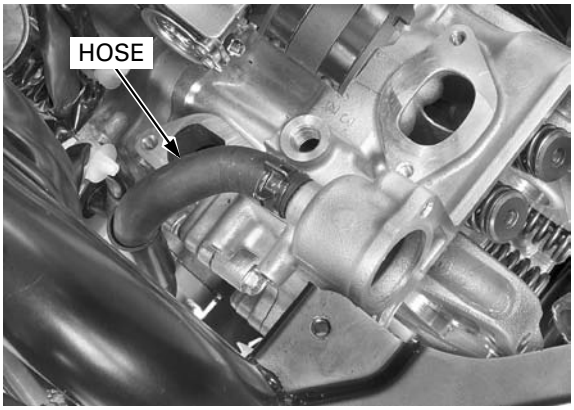

Install the two bolts and clamp stay.

Route the wires properly (page 1-19).

Install the main wire harness wire band, CKP sensor wire band, ignition coil wire band and spark plug wire band to the stay.

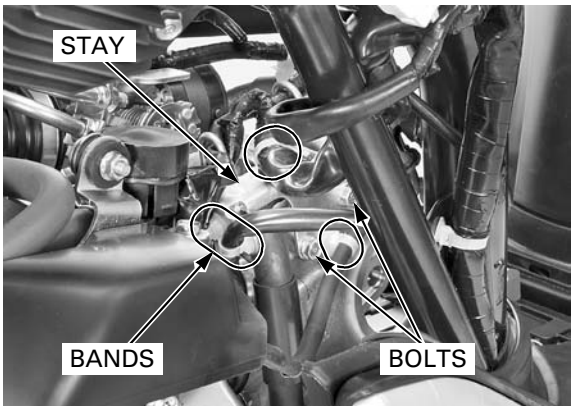

Install the following:

- spark plug (page 4-7)
- camshaft/rocker arm (if removed) (page 9-21)
- cam sprocket (page 9-22)
- cylinder head cover (page 9-24)
- O_2 sensor (page 6-76)
- ECT sensor (page 6-75)
- thermostat (page 7-9)
- intake manifold (page 6-64)
- exhaust pipe/muffler (page 3-15)

Fill the engine oil (page 4-11).
Fill and bleed the cooling system (page 7-7).

CAMSHAFT/ROCKER ARM INSTALLATION

CAMSHAFT/ROCKER ARM INSTALLATION

Do not exchange the intake and exhaust rocker arm shafts.

Apply molybdenum oil solution to the sliding surface of the rocker arms and shafts.

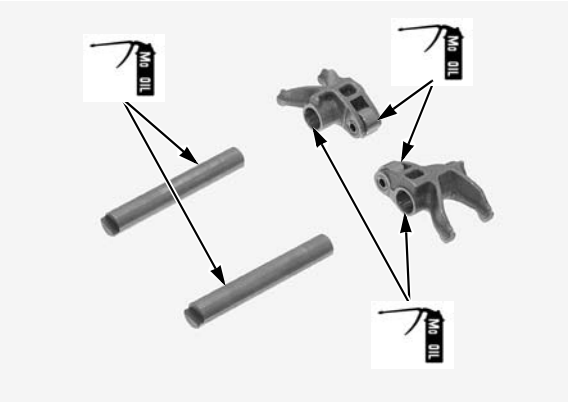

Clean the rocker arm shaft holes and camshaft bearing mating area.

Install the rocker arms and side springs as shown.

Install the rocker arm shafts with the cut-out facing rear side.

Install the rocker arm shafts to the cylinder head.

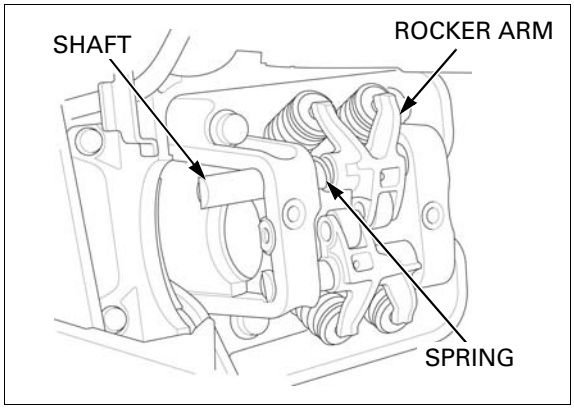

Apply molybdenum oil solution to the camshaft bearing and cam lobes.

Install the camshaft with the cam lobe facing the cylinder side while pressing down on the valve side of the rocker arm.

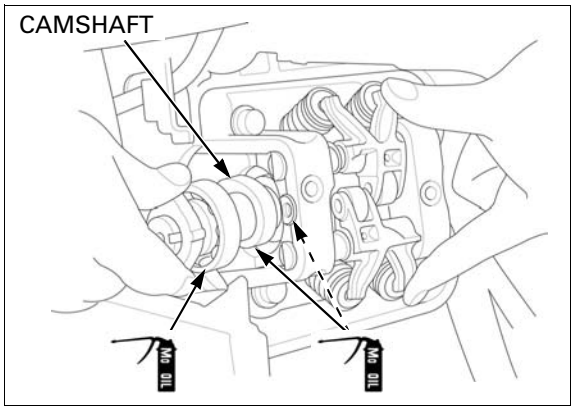

Apply locking agent to the stopper plate bolt threads (page 1-16).

Install the stopper plate, stopper bolt to the cylinder head as shown and tighten the bolt to the specified torque.

TORQUE: 12 N·m (1.2 kgf·m, 9 lbf·ft)

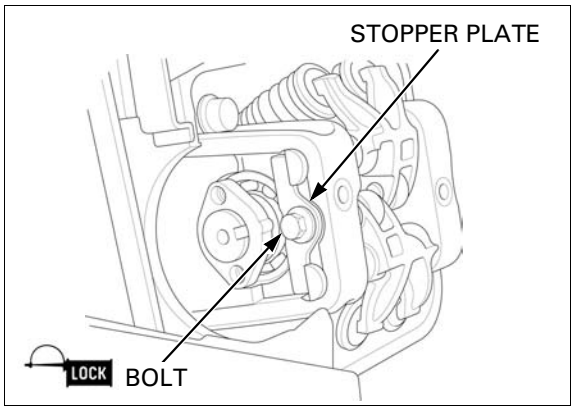

Be careful not to let the shims fall into the crankcase.

Shift the rocker arms to the spring side and install the shims in their original locations on the valve retainer.

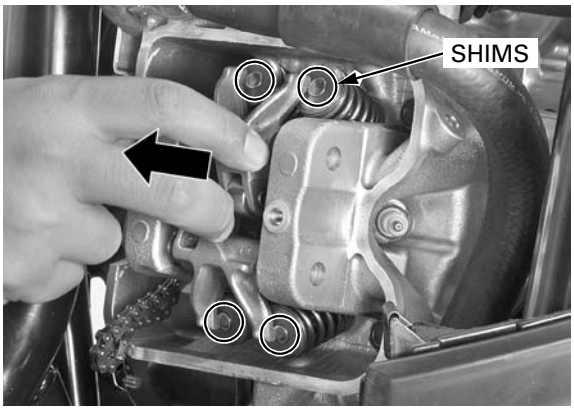

CAM SPROCKET INSTALLATION

Be careful not to jam the cam chain and timing sprocket on the crankshaft when rotating the crankshaft.

Rotate the drive pulley (crankshaft) counterclockwise and align the "T" mark on the flywheel with the index notch in the crankcase cover.

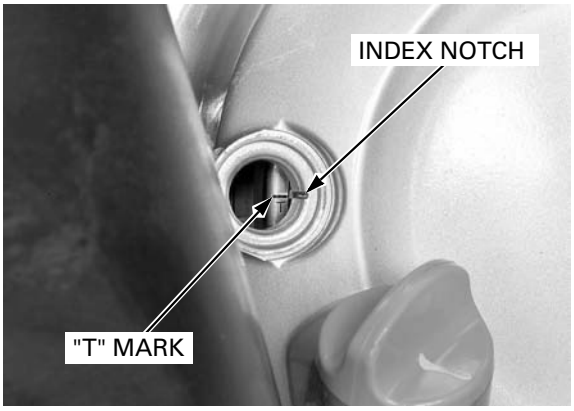

Apply engine oil to the cam chain and sprocket teeth.

Install the cam sprocket onto the cam chain so that the index line on the cam sprocket is flush with the cylinder head surface.

Install the cam sprocket onto the camshaft.

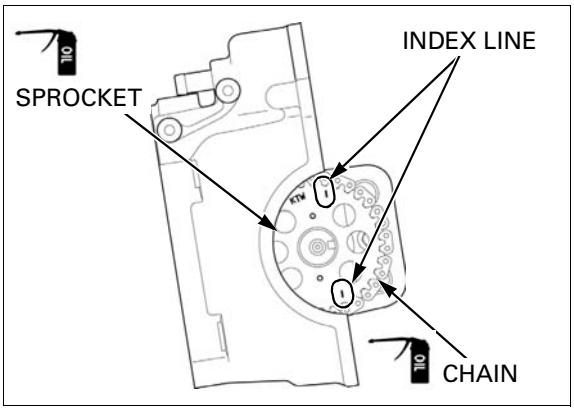

Cover the cylinder head with a shop towel to prevent sprocket bolt from falling into the crankcase.

Apply locking agent to the sprocket bolt threads (page 1-16).

Align the bolt holes in the sprocket and camshaft. Install the sprocket bolts and tighten them while holding the drive pulley (crankshaft).

TORQUE: 16 N·m (1.6 kgf·m, 12 lbf·ft)

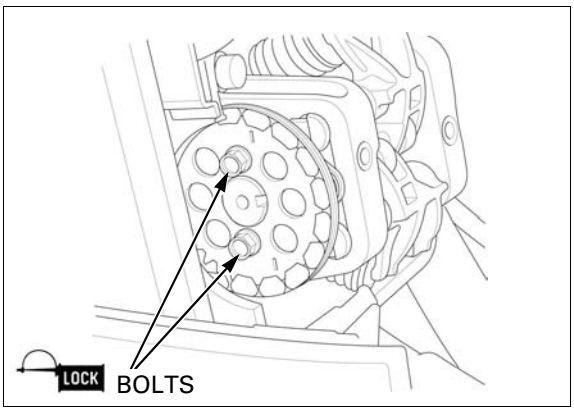

Retract the push rod while pushing the tab and release the tab to lock it.

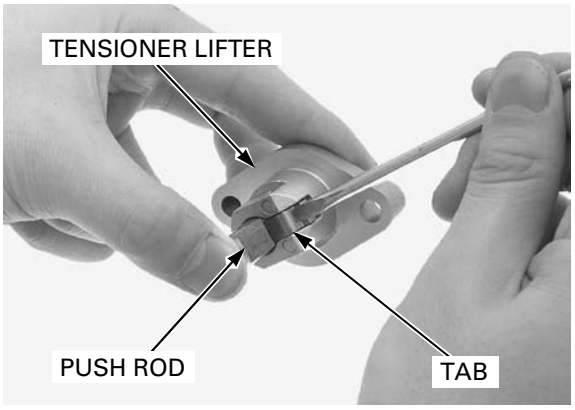

Install a new gasket and cam chain tensioner lifter onto the cylinder head.

Install and tighten the mounting bolts.

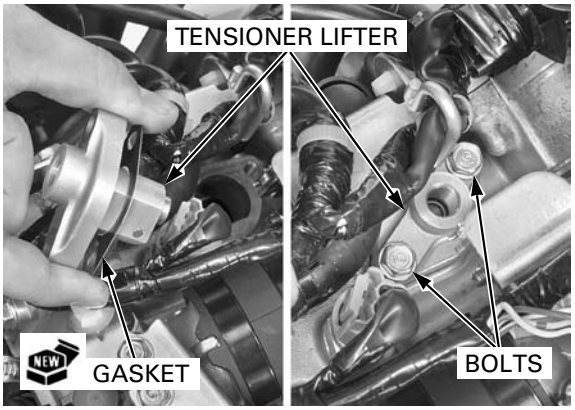

Install the spring, new sealing washer and sealing bolt.

Tighten the cam chain tensioner lifter sealing bolt to the specified torque.

TORQUE: 22 N·m (2.2 kgf·m, 16 lbf·ft)

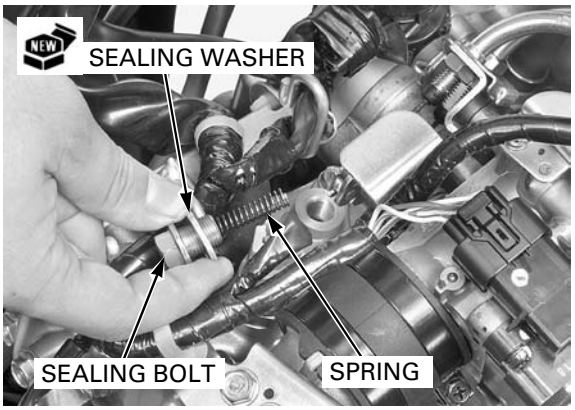

Make sure that the index lines on the cam sprocket aligns with the upper surface of the cylinder head when the "T" mark on the flywheel is aligned with the index notch in the right crankcase cover.

Apply engine oil to the threads of the timing hole cap.
Coat a new O-ring with engine oil and install it onto the timing hole cap.

Install the cap and tighten it to the specified torque.

TORQUE: 6 N·m (0.6 kgf·m, 4.4 lbf·ft)

Install the following:

– belt case air cleaner housing (page 4-16)
– cylinder head cover (page 9-19)

Fill and bleed the cooling system (page 7-7).

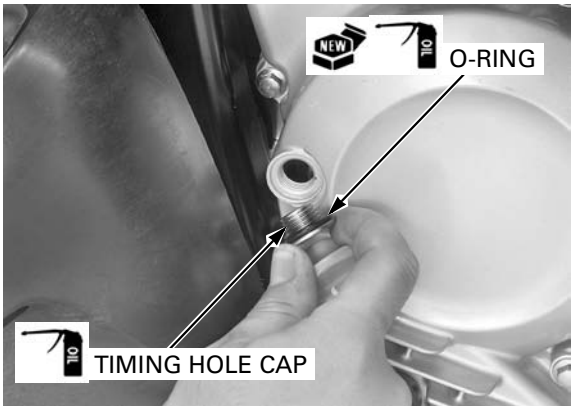

CYLINDER HEAD COVER INSTALLATION

Check that the rubber seal is in good condition, replace it if necessary.

Install the rubber seal.

Apply liquid sealant (Three Bond 1211 or shell KE45T or equivalent) to the cylinder head semi-circular cutout as shown.

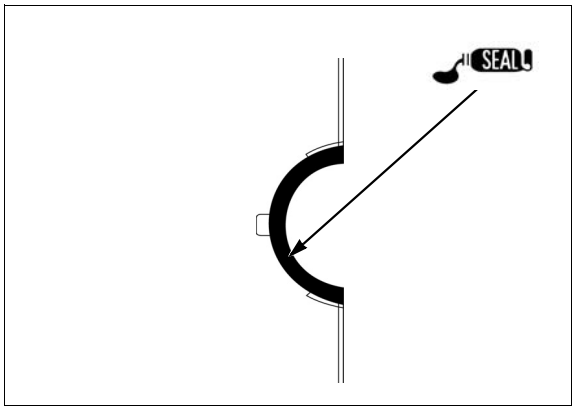

The "UP" mark of the washer is facing the bolt head.

Install the head cover, and the cover bolts with the special washers by aligning each bolt tip with the bolt hole in the cylinder head.

Tighten the cylinder head cover bolts to the specified torque.

TORQUE: 10 N·m (1.0 kgf·m, 7 lbf·ft)

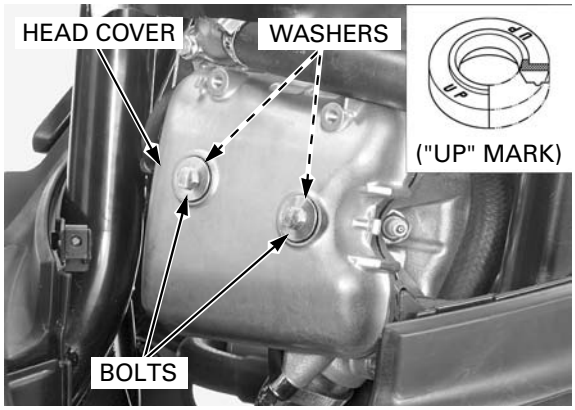

Connect the spark plug cap.
Install the bolt and spark plug wire clump.
Install the bolt and water hose clamp.

Install the following:

- body cover (page 3-6)
- grab rail (page 3-5)
- luggage box (page 3-5)
- maintenance lid (page 3-4)

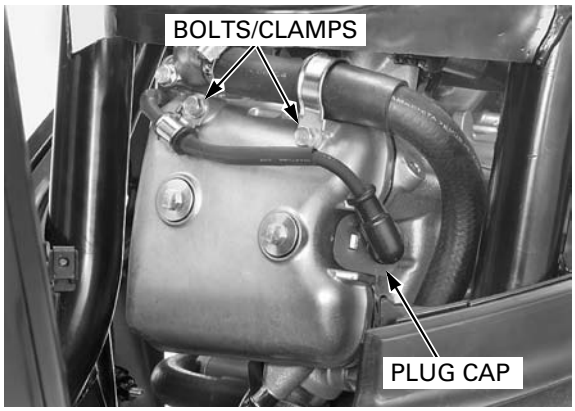

10. CYLINDER/PISTON

COMPONENT LOCATION 10-2

SERVICE INFORMATION 10-3

TROUBLESHOOTING 10-3

CYLINDER/PISTON REMOVAL 10-4

CYLINDER/PISTON INSPECTION 10-5

PISTON/CYLINDER INSTALLATION 10-7

COMPONENT LOCATION

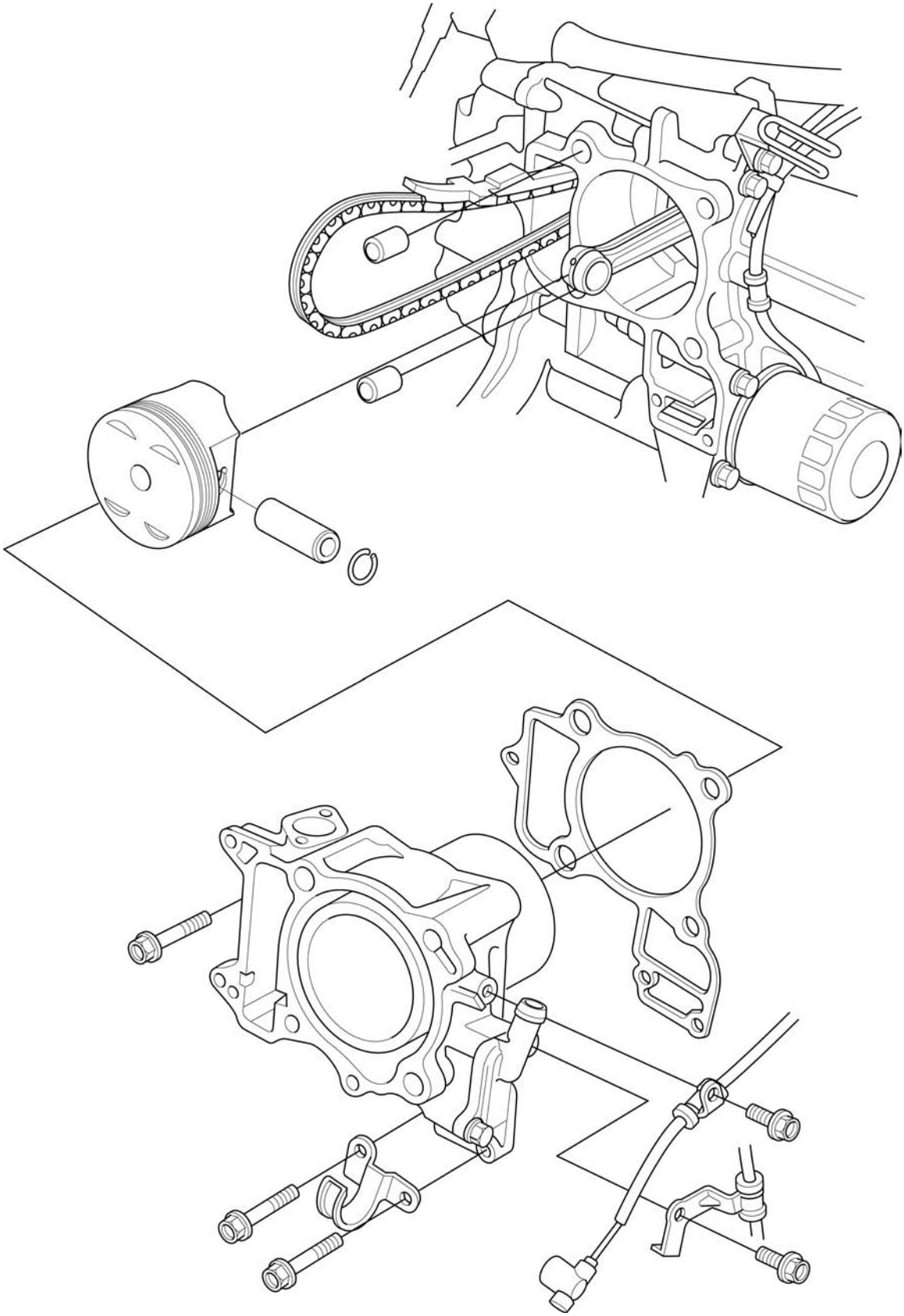

SERVICE INFORMATION

GENERAL

- This section covers maintenance of the cylinder and piston.
- The cylinder and piston can be serviced with the engine installed in the frame.
- Be careful not to damage the mating surfaces when removing the cylinder.
- Take care not to damage the cylinder wall and piston.
- The rocker arm and camshaft lubricating oil is fed through the oil passage (stud bolt hole) in the cylinder. Clean the oil passage before installing the cylinder.

SPECIFICATIONS

Unit: mm (in)

ITEM			STANDARD	SERVICE LIMIT
Cylinder	I.D.		72.000 – 72.010 (2.8346 – 2.8350)	72.045 (2.8364)
	Out-of-round		–	0.05 (0.002)
	Taper		–	0.05 (0.002)
	Warpage		–	0.05 (0.002)
Piston, piston pin, piston ring	Piston O.D. at 10 (0.4) from bottom		71.97 – 71.99 (2.833 – 2.834)	71.90 (2.831)
	Piston pin hole I.D.		17.002 – 17.008 (0.6694 – 0.6696)	17.03 (0.670)
	Piston pin O.D.		16.994 – 17.000 (0.6691 – 0.6693)	16.98 (0.669)
	Piston-to-piston pin clearance		0.002 – 0.014 (0.0001 – 0.0006)	0.02 (0.001)
	Piston ring end gap	Top	0.15 – 0.30 (0.006 – 0.012)	0.50 (0.019)
		Second	0.30 – 0.45 (0.012 – 0.018)	0.65 (0.026)
		Oil (side rail)	0.20 – 0.70 (0.008 – 0.028)	1.00 (0.039)
	Piston ring-to-ring groove clearance	Top	0.030 – 0.065 (0.0012 – 0.0026)	0.080 (0.0031)
		Second	0.015 – 0.050 (0.0006 – 0.0020)	0.065 (0.0026)
Cylinder-to-piston clearance			0.010 – 0.040 (0.0004 – 0.0016)	0.10 (0.004)
Connecting rod small end I.D.			17.016 – 17.034 (0.6699 – 0.6706)	17.06 (0.672)
Connecting rod-to-piston pin clearance			0.016 – 0.040 (0.0006 – 0.0016)	0.06 (0.002)

TROUBLESHOOTING

Compression too low, hard starting or poor performance at low speed
- Worn, stuck or broken piston ring
- Worn or damaged cylinder and piston
- Cylinder head/valve problem (page 9-5)

Compression too high, overheating or knocking
- Excessive carbon build-up on piston head or on combustion chamber

Excessive smoke
- Worn cylinder, piston or piston ring
- Improper installation of piston rings
- Scored or scratched piston or cylinder wall
- Cylinder head/valve problem (page 9-5)

Abnormal noise
- Worn piston pin or piston pin hole
- Worn connecting rod small end
- Worn cylinder, piston or piston rings

Piston ring sticking/scuffing, bearing damage
- Clogged oil gallery or oil strainer screen
- Internal oil leak
- Use of poor quality engine oil

CYLINDER/PISTON REMOVAL

CYLINDER REMOVAL

Remove the cylinder head (page 9-11).

Remove the two bolts, oil pressure switch wire clamp and PAIR check valve (page 6-79).

Remove the bolt and O_2 sensor wire clamp

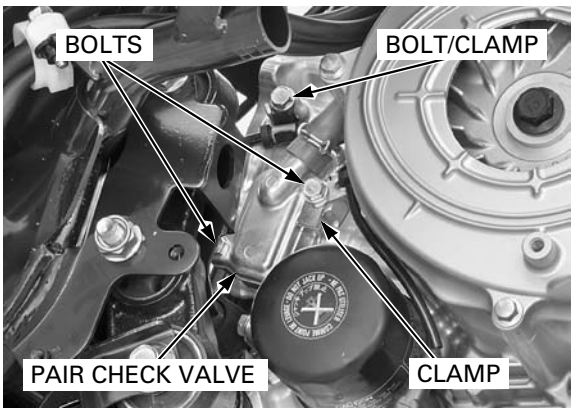

Release the water hose from the clamp.

Remove the following:

- two bolts and water hose clamp
- bolt
- cylinder

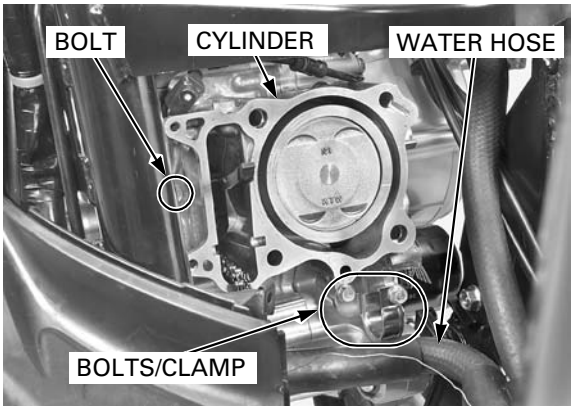

- gasket
- two dowel pins

Clean off any gasket material from the cylinder mating surface.

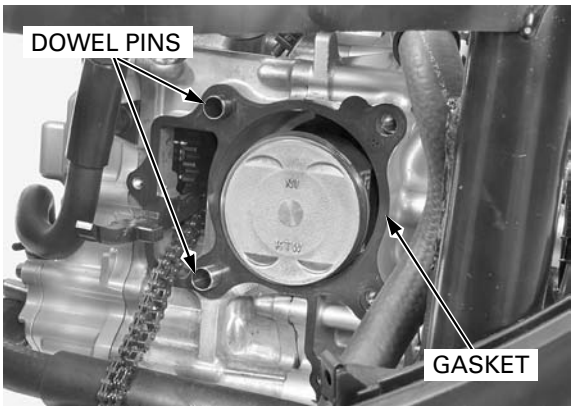

PISTON REMOVAL

Place a clean shop towel over the crankcase to prevent the piston pin clip from falling into the crankcase.

Remove the piston pin clips with pliers.
Push the piston pin out of the piston and connecting rod, and remove the piston.

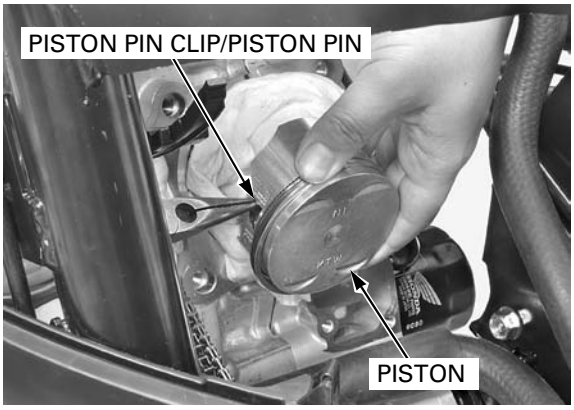

Do not damage the piston ring by spreading the ends too far.

Spread each piston ring and remove it by lifting up at a point opposite the gap.

Never use a wire brush, it will scratch the groove.

Clean carbon deposits from the ring grooves with a ring that will be discarded.

CYLINDER/PISTON INSPECTION

CYLINDER

Inspect the cylinder wall for scratches or wear. Measure the cylinder I.D. at three levels in the X and Y axis. Take the maximum reading to determine the cylinder wear.

SERVICE LIMITS: 72.045 mm (2.8364 in)

Calculate the taper and out-of-round at three levels in the X and Y axes. Take the maximum reading to determine both measurements.

SERVICE LIMITS:

Taper:	**0.05 mm (0.002 in)**
Out-of-round:	**0.05 mm (0.002 in)**

The cylinder must be rebored and an oversize piston/piston rings fitted if the service limits are exceeded.

The following oversize pistons/piston rings are available:

0.25 mm (0.010 in)
0.50 mm (0.020 in)

The piston-to-cylinder clearance for the oversize piston must be 0.010 – 0.040 mm (0.0004 – 0.0016 in).

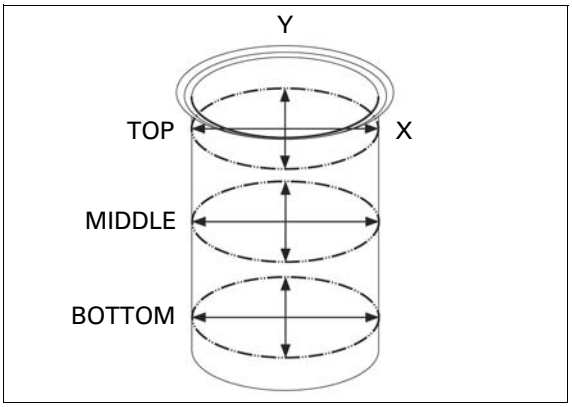

Check the cylinder for warpage with a straight edge and feeler gauge in the directions shown.

SERVICE LIMIT: 0.05 mm (0.002 in)

PISTON/PISTON RING

Inspect the piston rings for movement by rotating the rings. The rings should be able to move in their grooves without catching.
Push the ring until the outer surface of the piston ring is nearly flush with the piston and measure the ring-to-groove clearance.

SERVICE LIMITS: Top: 0.080 mm (0.0031 in)
Second: 0.065 mm (0.0026 in)

Insert each piston ring into the bottom of the cylinder squarely using the piston.
Measure the ring end gap.

SERVICE LIMITS:

Top:	**0.50 mm (0.019 in)**
Second:	**0.65 mm (0.026 in)**
Oil (side rail):	**1.00 mm (0.039 in)**

Measure the piston pin hole I.D. Take the maximum reading to determine I.D.

SERVICE LIMIT: 17.03 mm (0.670 in)

Measure the piston pin O.D. at piston and connecting rod sliding areas.

SERVICE LIMIT: 16.98 mm (0.669 in)

Calculate the piston-to-piston pin clearance.

SERVICE LIMIT: 0.02 mm (0.001 in)

Measure the piston O.D. at the point 10 mm (0.4 in) from the bottom and 90° to the piston pin hole.

SERVICE LIMITS: 71.90 mm (2.831 in)

Calculate the cylinder-to-piston clearance (cylinder I.D.: page 10-5).

SERVICE LIMIT: 0.10 mm (0.004 in)

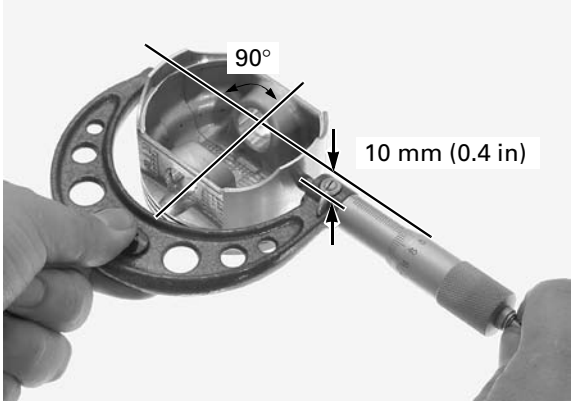

Measure the connecting rod small end I.D.

SERVICE LIMIT: 17.06 mm (0.672 in)

Calculate the connecting rod-to-piston pin clearance.

SERVICE LIMIT: 0.06 mm (0.002 in)

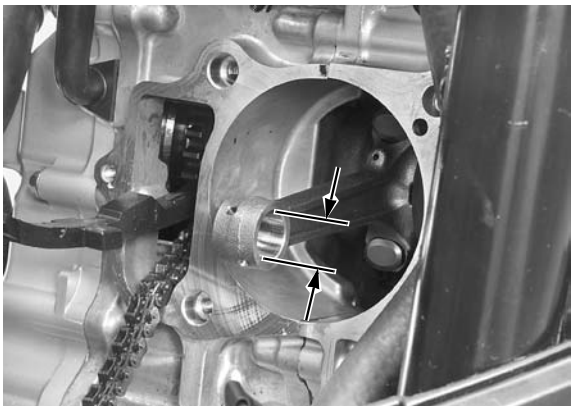

PISTON/CYLINDER INSTALLATION

PISTON INSTALLATION

Apply engine oil to the ring grooves.

Be careful not to damage the piston and rings.

Carefully install the piston rings into the piston ring grooves with the marks facing up.

- Do not confuse the top and second rings.
- To install the oil ring, install the spacer first, then install the side rails.

Stagger the piston ring end gaps 120 degrees apart from each other.
Stagger the side rail end gaps as shown.

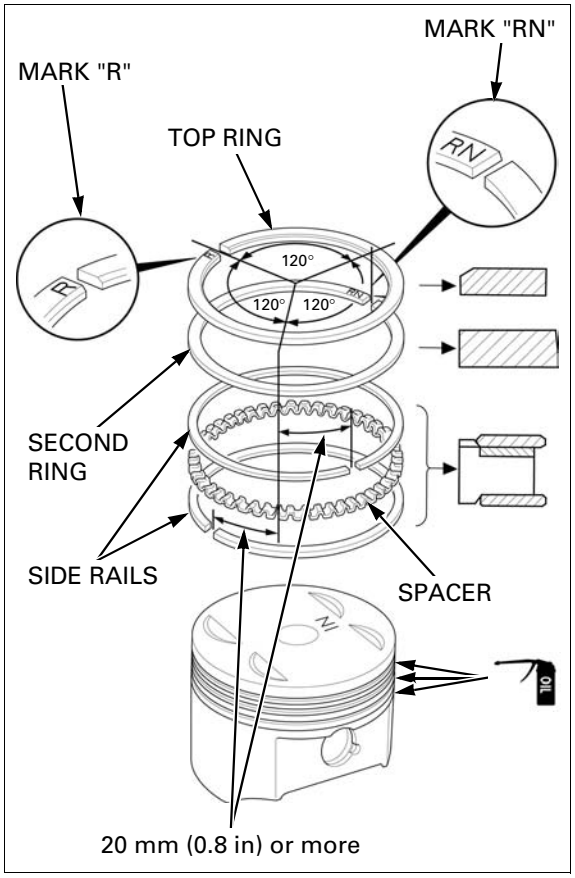

Place a shop towel at the opening of the crankcase to prevent the piston pin clips from falling into the crankcase.

Apply molybdenum oil solution to the piston pin and piston pin hole.

Install the piston with the "IN" mark facing the intake side.

Install the piston pin and new pin clips.

- Make sure the piston pin clips are seated securely.
- Do not align the piston pin clip end gap with the piston cut-out.

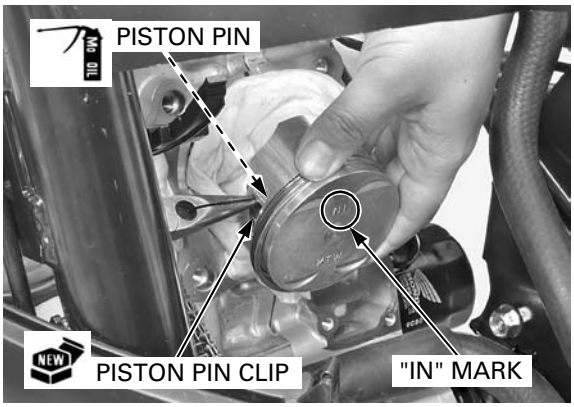

CYLINDER INSTALLATION

Be careful not to damage the mating surfaces.

Clean the mating surfaces of the cylinder and crankcase thoroughly.
Blow out the oil passage in the cylinder with compressed air.

Install the dowel pins and a new gasket.

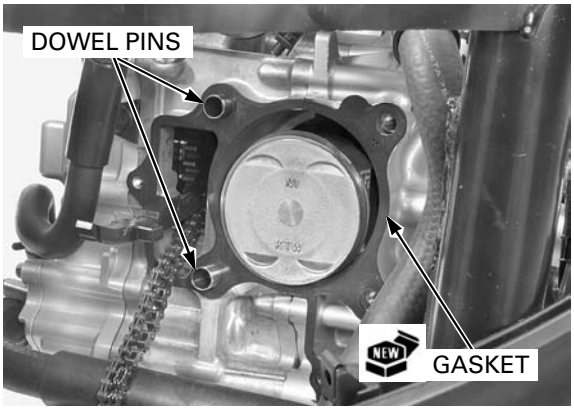

Apply engine oil to the cylinder wall, piston outer surface and piston rings.

Route the cam chain through the cylinder and install the cylinder over the piston while compressing the piston rings with your fingers.

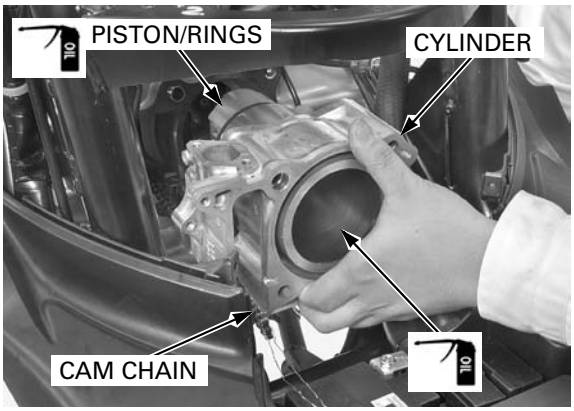

Install and tighten the bolt.

Install the water hose clamp and tighten the bolts.

Set the water hose of the clamp.

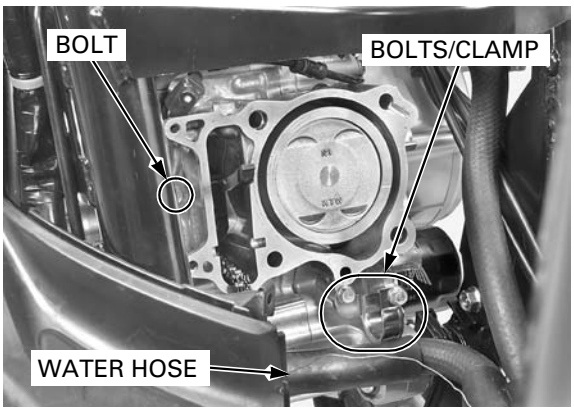

Install the O_2 sensor wire clamp and tighten the bolt.

Install the PAIR check valve (page 6-79), oil pressure switch wire clamp and tighten the two bolts.

Install the cylinder head (page 9-19).

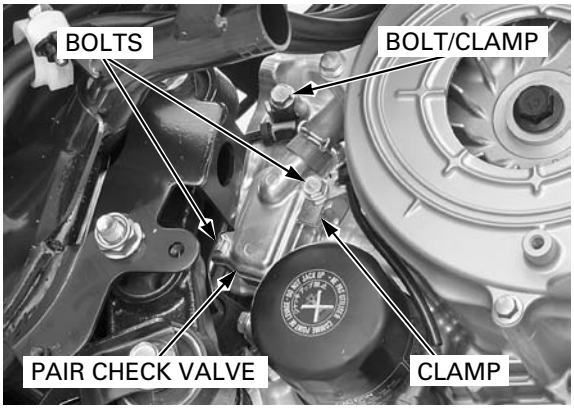

MEMO

11. DRIVE AND DRIVEN PULLEYS/CLUTCH

COMPONENT LOCATION 11-2

SERVICE INFORMATION 11-3

TROUBLESHOOTING 11-4

LEFT CRANKCASE COVER 11-5

DRIVE BELT 11-7

DRIVE PULLEY 11-8

CLUTCH/DRIVEN PULLEY 11-11

COMPONENT LOCATION

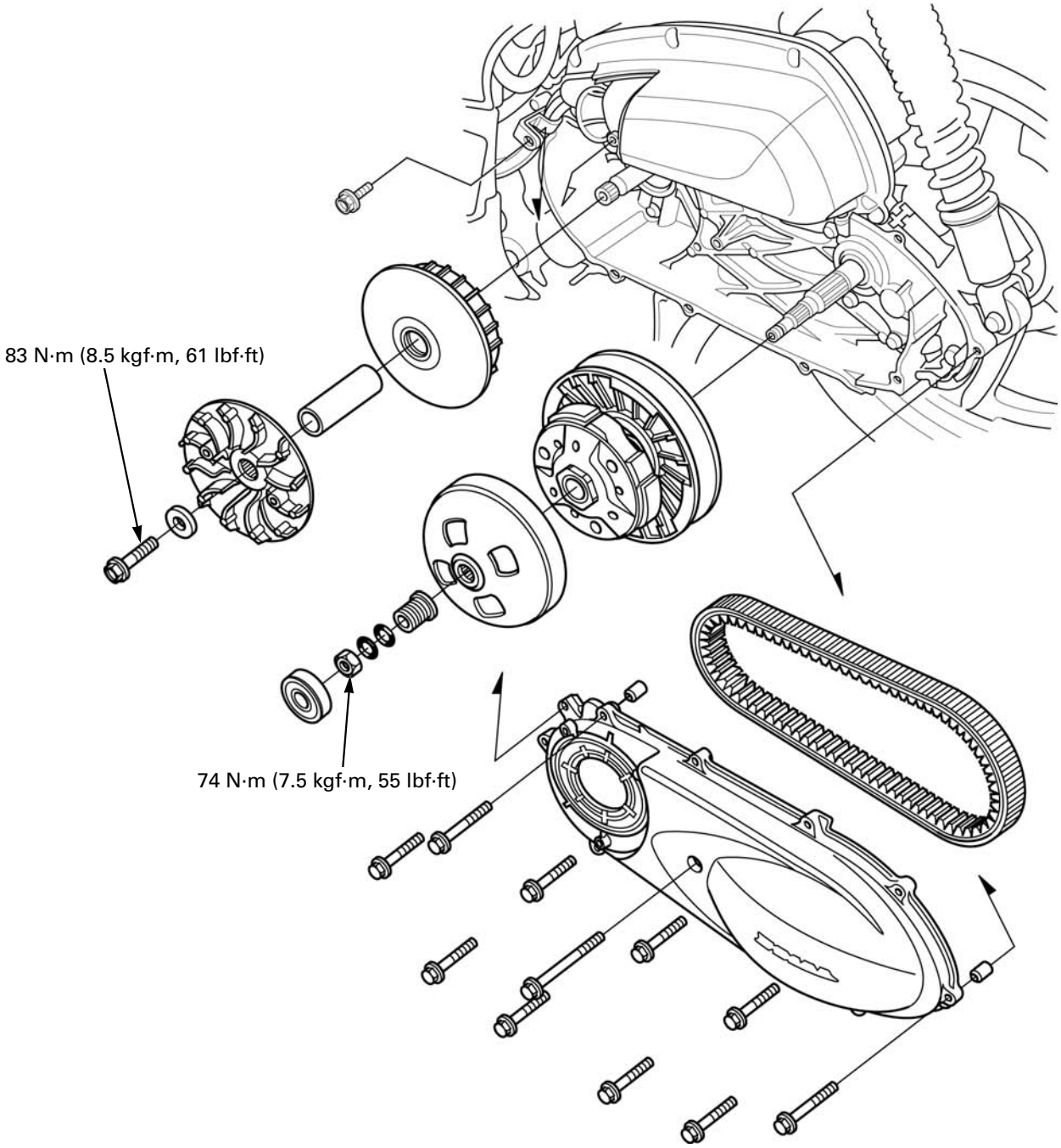

SERVICE INFORMATION

GENERAL

- This section covers maintenance of the drive pulley, driven pulley and clutch.
- These services can be done with the engine installed in the frame.
- Avoid getting grease and oil on the drive belt and drive/driven pulley faces in order to prevent belt slippage.
- Do not apply grease to the weight rollers.

SPECIFICATIONS

Unit: mm (in)

ITEM		STANDARD	SERVICE LIMIT
Drive belt width		26.5 (1.04)	25.5 (1.00)
Movable drive face	Bushing I.D.	30.024 – 30.057 (1.1820 – 1.01833)	30.08 (1.184)
	Boss O.D.	29.995 – 30.031 (1.1809 – 1.1823)	29.98 (1.180)
	Weight roller O.D.	22.92 – 23.08 (0.902 – 0.909)	22.5 (0.89)
Clutch	Clutch outer I.D.	135.0 – 135.2 (5.31 – 5.32)	135.5 (5.33)
	Lining thickness	4.0 (0.16)	1.0 (0.04)
Driven pulley	Face spring free length	109.6 (4.31)	106 (4.2)
	Driven face boss O.D.	39.965 – 39.985 (1.5734 – 1.5742)	39.94 (1.572)
	Movable driven face I.D.	40.000 – 40.025 (1.5748 – 1.5758)	40.06 (1.577)

TORQUE VALUES

Clutch/driven pulley nut	79 N·m (8.1 kgf·m, 58 lbf·ft)	
Clutch outer nut	74 N·m (7.5 kgf·m, 55 lbf·ft)	
Drive pulley face bolt	83 N·m (8.5 kgf·m, 61 lbf·ft)	Apply engine oil to the threads and seating surface.

TOOLS

Universal holder 07725-0030000 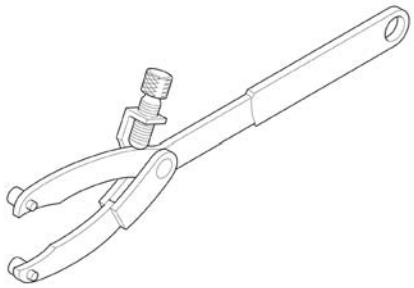	Flywheel holder 07725-0040001 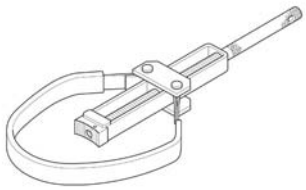	Clutch spring compressor 07LME-GZ40201 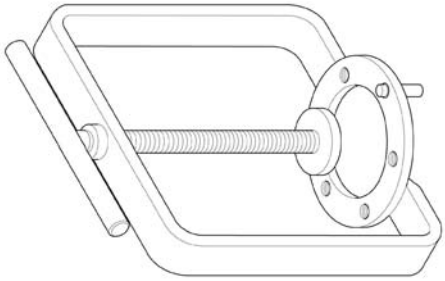
Socket wrench, 39 x 41 mm 07GMA-KS40100 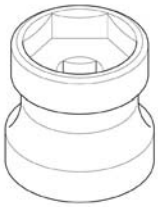	Bearing remover set, 20 mm 07936-3710600 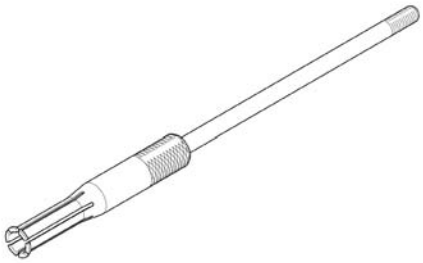	Bearing remover handle 07936-3710100 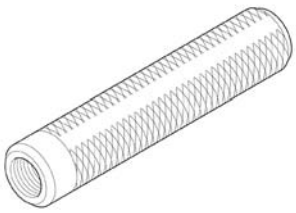

Bearing remover set, 25 mm 07936-ZV10100 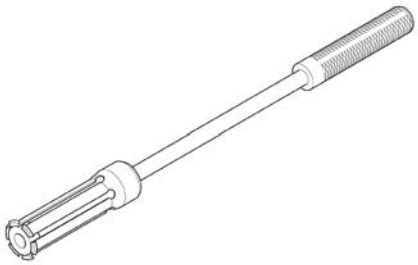	Remover weight 07741-0010201 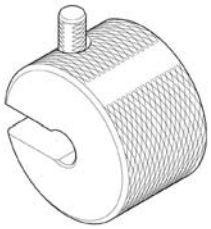	Attachment, 32 x 35 mm 07746-0010100
Attachment, 42 x 47 mm 07746-0010300 	Pilot, 20 mm 07746-0040500 	Pilot, 25 mm 07746-0040600
Pilot, 28 mm 07746-0041100 	Driver 07749-0010000 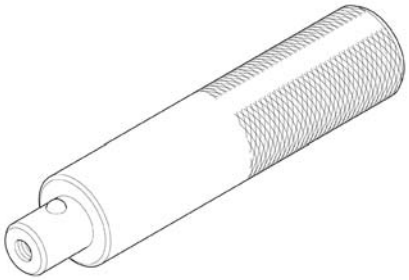	

TROUBLESHOOTING

Engine starts but scooter won't move
- Worn drive belt
- Damaged ramp plate
- Worn or damaged clutch shoe
- Broken driven face spring

Engine stalls or scooter creeps
- Broken clutch shoe spring

Poor performance at high speed or lack of power
- Worn drive belt
- Weak driven face spring
- Worn weight rollers
- Contaminated pulley faces

LEFT CRANKCASE COVER

REMOVAL

Remove the belt case air cleaner housing (page 4-16).

Remove the following:

- bolt (10 mm head) and wire clamp (from the left crankcase cover)
- eleven bolts (8 mm head)
- left crankcase cover

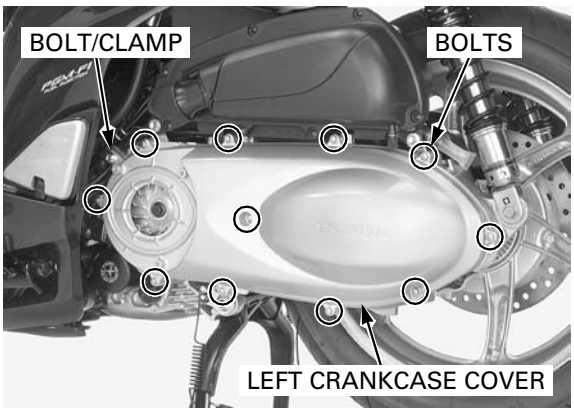

- two dowel pins
- rubber seal

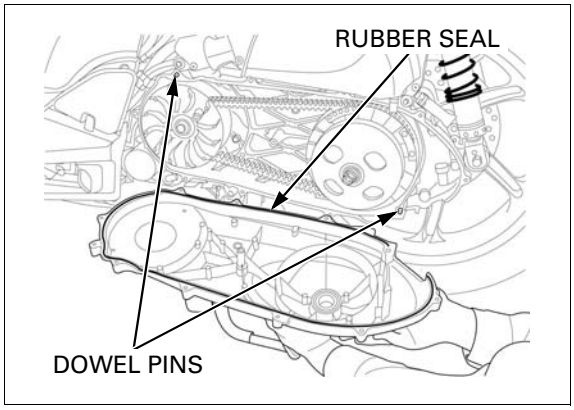

DRIVESHAFT BEARING INSPECTION

Turn the bearing with your finger.
The bearing/collar should turn smoothly and quietly.
Also check that the bearing outer race fits tightly in the left crankcase cover.

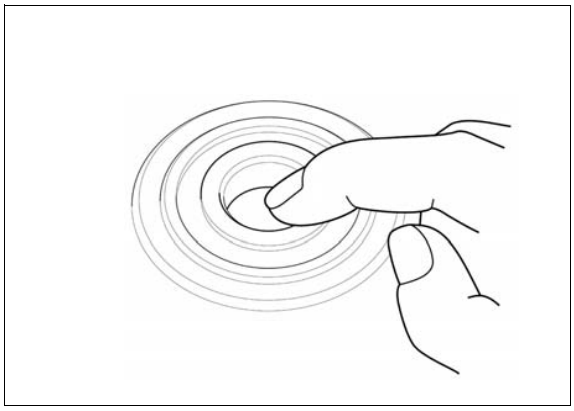

DRIVESHAFT BEARING REPLACEMENT

Remove the driveshaft bearing from the left crankcase cover using the special tools.

TOOLS:

Bearing remover set, 20 mm	**07936-3710600**
Bearing remover handle	**07936-3710100**
Remover weight	**07741-0010201**

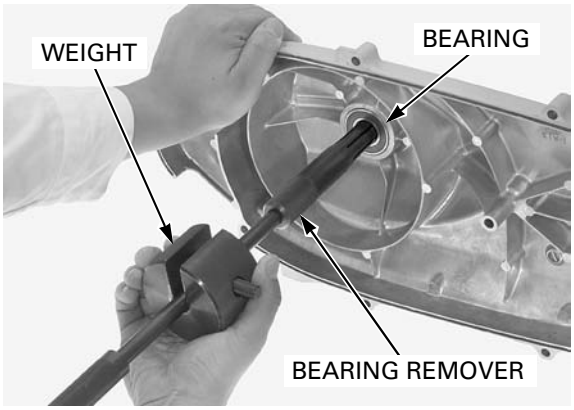

Apply engine oil to new bearing cavity.

Drive the bearing into the left crankcase cover squarely until it is fully seated, using the special tools.

TOOLS:

Driver	**07749-0010000**
Attachment, 42 x 47 mm	**07746-0010300**
Pilot, 20 mm	**07746-0040500**

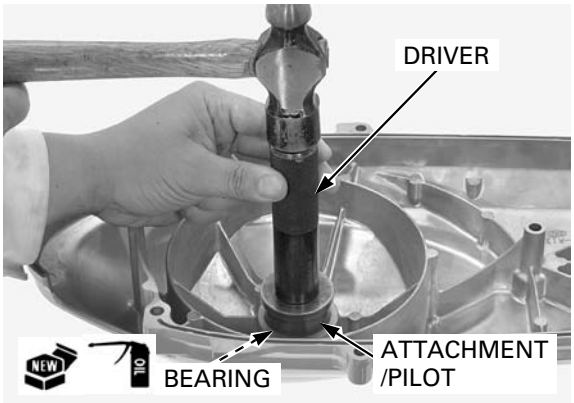

INSTALLATION

Check the rubber seal and replace it if necessary.
Clean the rubber seal groove in the left crankcase cover.
Install the rubber seal onto the left crankcase cover.

Install the two dowel pins into the left crankcase.

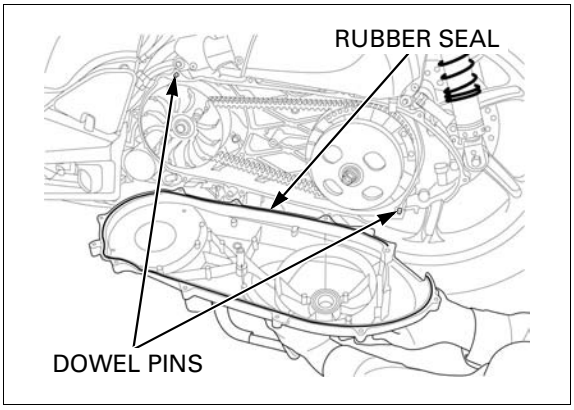

Be careful not to damage the rubber seal.

Install the left crankcase cover onto the left crankcase by aligning the holes with the dowel pins.

Install the left crankcase cover bolts (8 mm head) and tighten them in a crisscross pattern in 2 or 3 steps.

Set the wire clamp and tighten the bolt (10 mm head).

Install the belt case air cleaner housing (page 4-16).

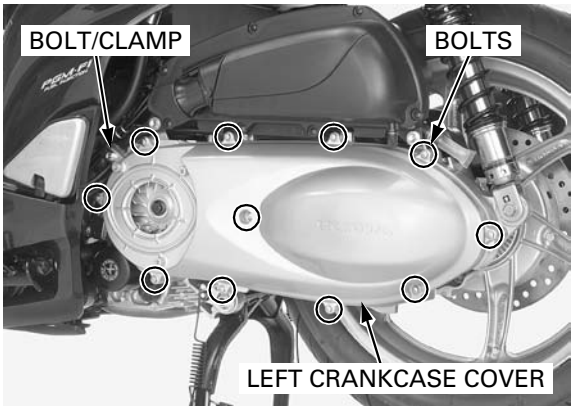

DRIVE BELT

REMOVAL

Remove the following:

- left crankcase cover (page 11-5)
- drive pulley face (page 11-8)
- clutch outer (page 11-11)

Remove the clutch/driven pulley assembly with the drive belt from the driveshaft.
Remove the drive belt from the driven pulley.

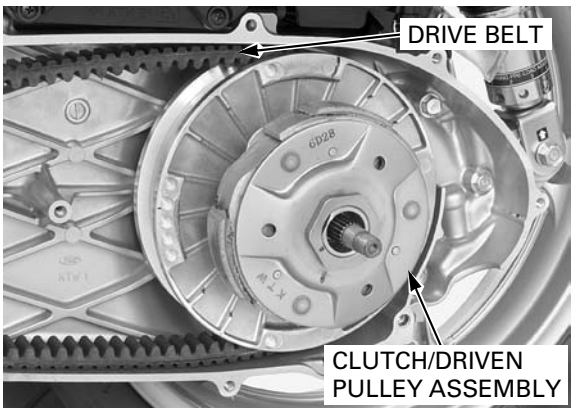

INSTALLATION

Clean any oil and grease from the driven faces.

Spread the driven pulley width by compressing the driven face spring while turning the movable driven face clockwise, and install the drive belt into the driven pulley.

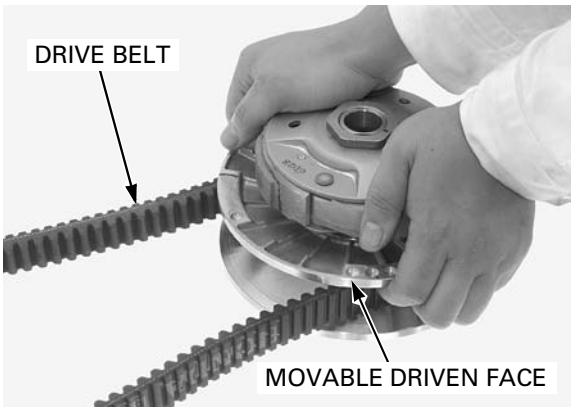

Take care not to get grease of the driven face inner surface to the splines and threads of the driveshaft.

Install the clutch/driven pulley assembly onto the driveshaft, and the drive belt onto the drive face boss.

Install the following:

- clutch outer (page 11-19)
- drive pulley face (page 11-9)
- left crankcase cover (page 11-6)

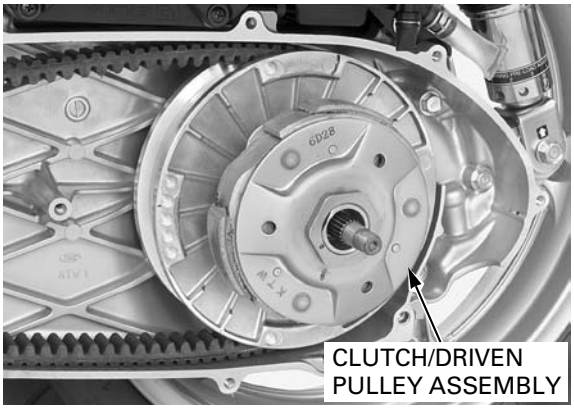

DRIVE PULLEY

REMOVAL

Remove the left crankcase cover (page 11-5).

Hold the drive pulley face with special tool and loosen the drive pulley face bolt.

TOOL:
Universal holder **07725-0030000**

Remove the bolt, washer and drive pulley face.

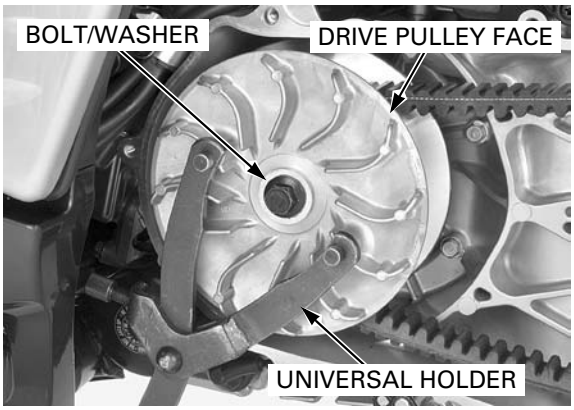

Remove the drive belt from the crankshaft.

Remove the movable drive face assembly while holding the back of the ramp plate.

Remove the drive face boss from the movable drive face assembly.

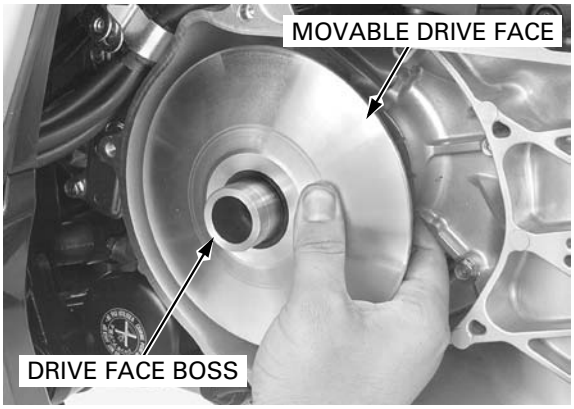

Remove the ramp plate, slide pieces and weight rollers from the movable drive face.

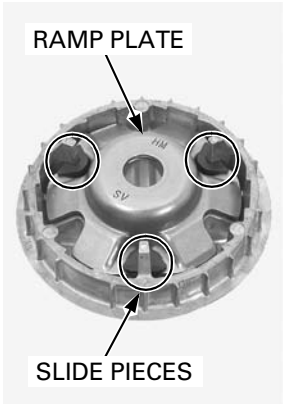

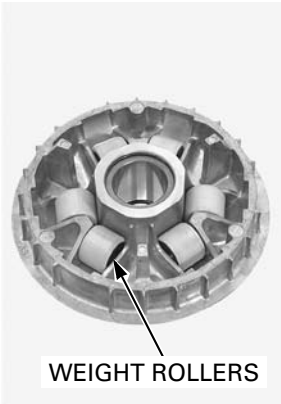

INSPECTION

WEIGHT ROLLER

Check each roller for wear or damage.
Measure the weight roller O.D.

SERVICE LIMIT: 22.5 mm (0.89 in)

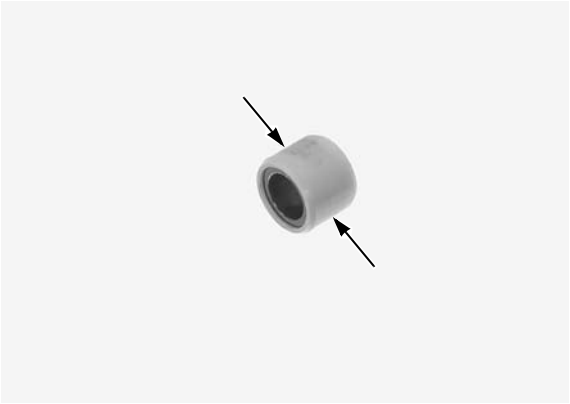

MOVABLE DRIVE FACE

Check the drive face boss for wear or damage.
Measure the face bushing I.D.

SERVICE LIMIT: 30.08 mm (1.184 in)

Measure the boss O.D.

SERVICE LIMIT: 29.98 mm (1.180 in)

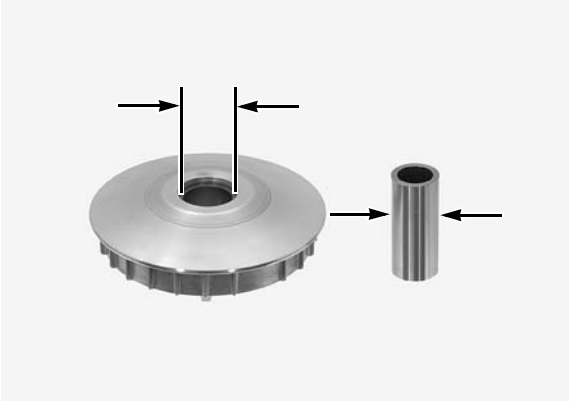

INSTALLATION

NOTICE

- *Avoid getting grease or oil on the drive belt and drive pulley faces in order to prevent belt slippage.*
- *Do not apply grease to the movable drive face and weight rollers.*

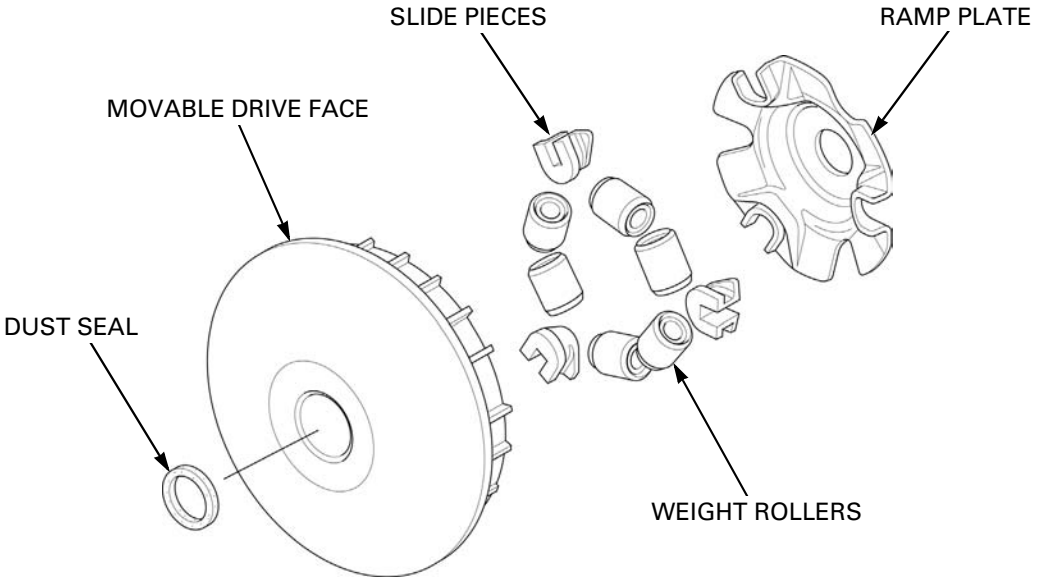

Clean any oil and grease from the weight rollers.

Install the weight rollers on the movable drive face.
Install the slide piece and ramp plate.

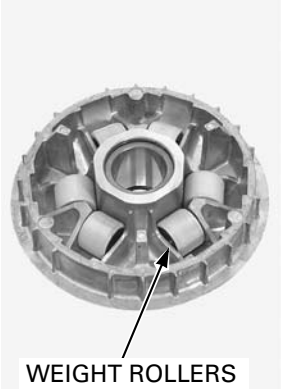

Clean any oil and grease from the drive face and the drive belt.

Install the drive face boss into the movable drive face assembly.
Install the movable drive face assembly onto the crankshaft while holding the ramp plate.

Install the drive belt onto the drive face boss.

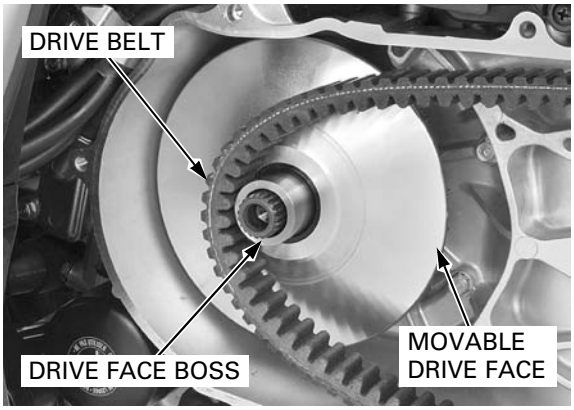

Clean any oil and grease from the drive pulley face.

Install the drive pulley face.

Apply engine oil to the threads and seating surface of the drive pulley face bolt.

Install the washer and drive pulley face bolt.

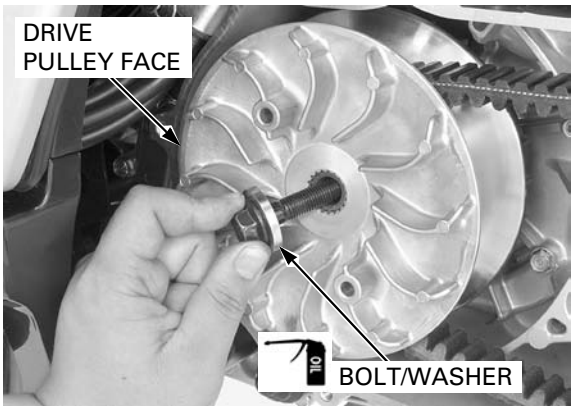

Hold the drive pulley face with the special tool and tighten the bolt to the specified torque.

TOOL:
Universal holder **07725-0030000**

TORQUE: 83 N·m (8.5 kgf·m, 61 lbf·ft)

Install the left crankcase case cover (page 11-6).

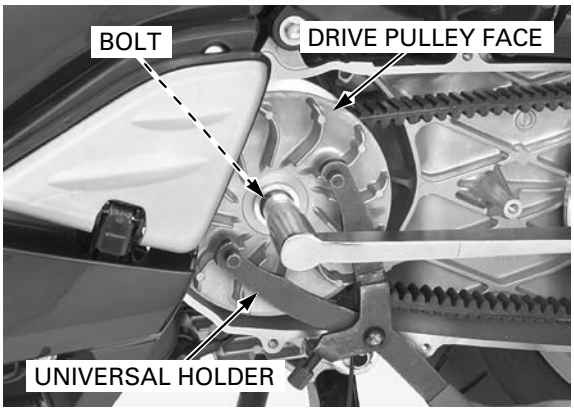

CLUTCH/DRIVEN PULLEY

REMOVAL

Remove the drive pulley face (page 11-8).

Hold the clutch outer with the special tool and loosen the clutch outer nut.

TOOL:
Flywheel holder **07725-0040001**

Remove the nut, bearing collar and clutch outer.

Remove the O-rings from the bearing collar.

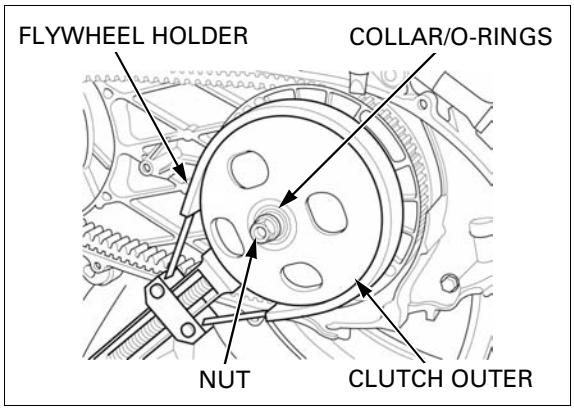

Remove the clutch/driven pulley assembly with the drive belt from the driveshaft.
Remove the drive belt from the driven pulley.

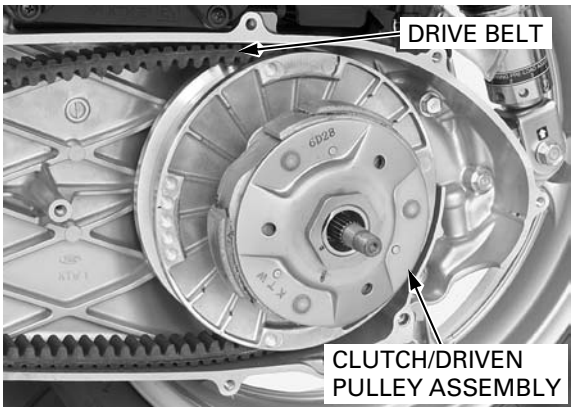

CLUTCH OUTER/SHOE LINING INSPECTION

Check the clutch outer for wear or damage.
Measure the clutch outer I.D.

SERVICE LIMIT: 135.5 mm (5.33 in)

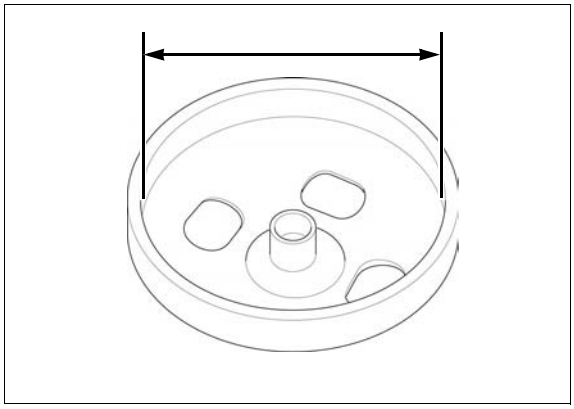

DISASSEMBLY

CLUTCH/DRIVEN PULLEY

Set the clutch spring compressor onto the clutch/driven pulley assembly by aligning the bosses with the holes in the clutch.

TOOL:
Clutch spring compressor **07LME-GZ40201**

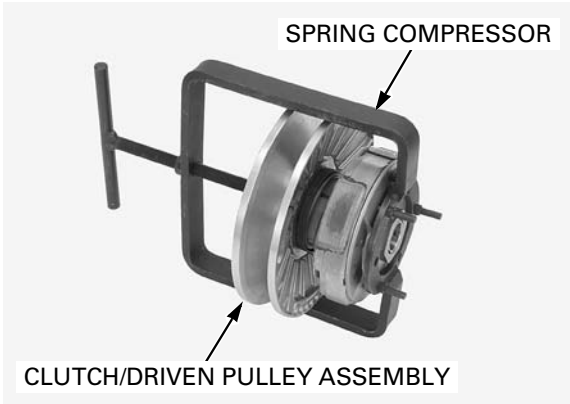

To prevent loss of tension, do not compress the clutch spring more than necessary to remove the clutch/ driven pulley nut.

Hold the clutch spring compressor in a vise and remove the clutch/driven pulley nut using the special tool.

TOOL:
Socket wrench, 39 x 41 mm 07GMA-KS40100

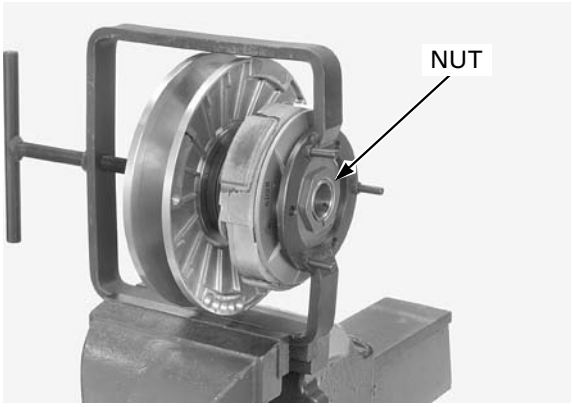

Loosen the clutch spring compressor gradually and remove the following:

- clutch assembly
- spring seat
- spring collar B
- driven face spring
- spring collar A
- driven pulley assembly

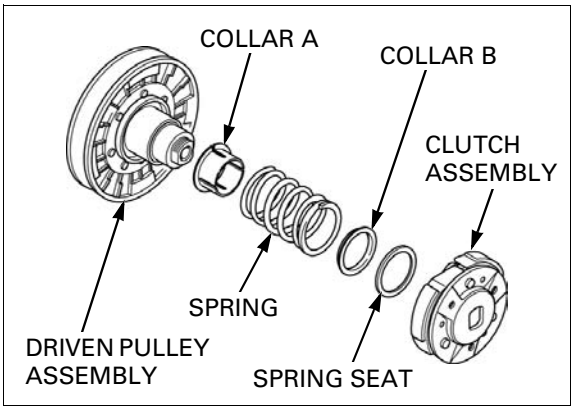

CLUTCH

Remove the following:

- three E-clips
- clutch side plate

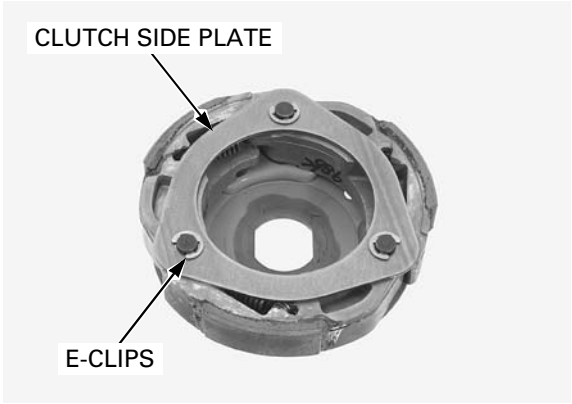

- three shoe springs
- three clutch shoes

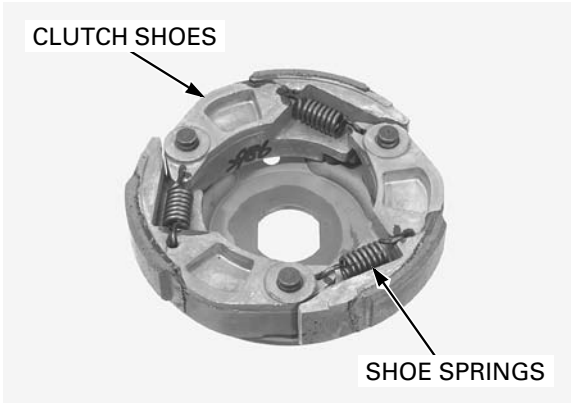

– three rubber dampers

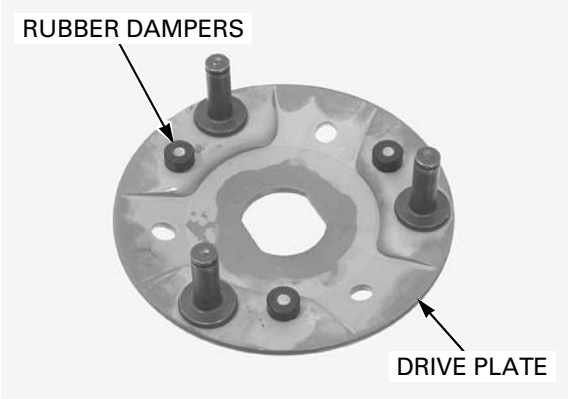

DRIVEN PULLEY

Remove the following:

– seal collar

– guide pins and rollers
– movable driven face

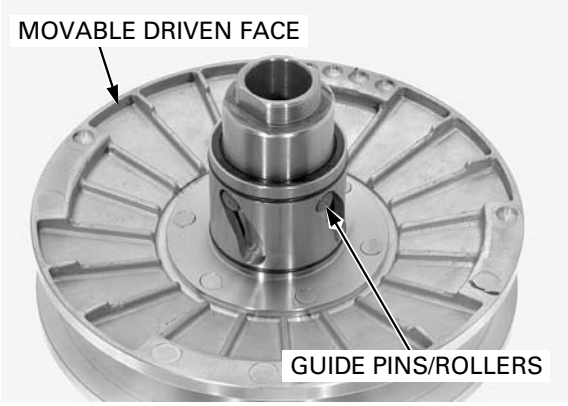

– two O-rings
– two oil seals

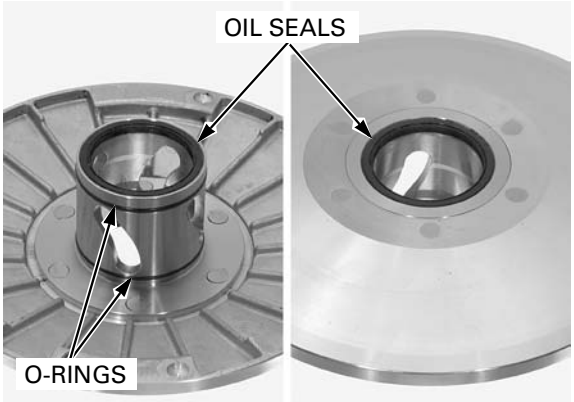

DRIVEN FACE BEARING REPLACEMENT

Remove the driven face needle bearing using the special tools.

TOOLS:

Bearing remover set, 25 mm	**07936-ZV10100**
Remover weight	**07741-0010201**

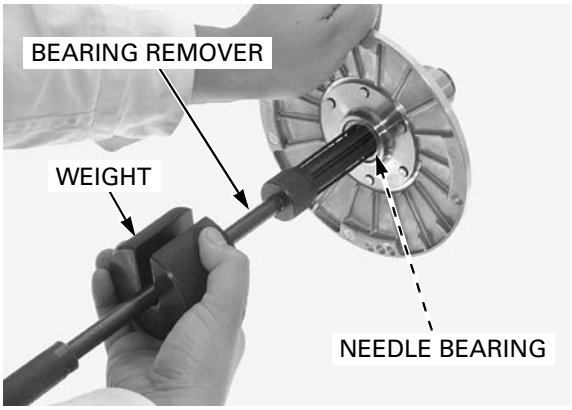

Remove the snap ring and remove the ball bearing.

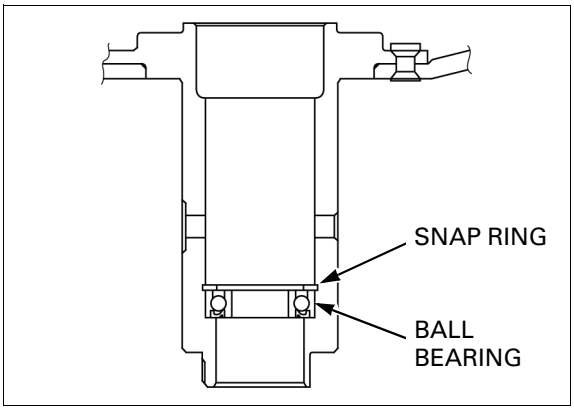

Pack new ball bearing cavity with grease.

Press the ball bearing into the driven face with the sealed side facing down until it is fully seated using the special tool.

TOOLS:

Driver	**07749-0010000**
Pilot, 28 mm	**07746-0041100**

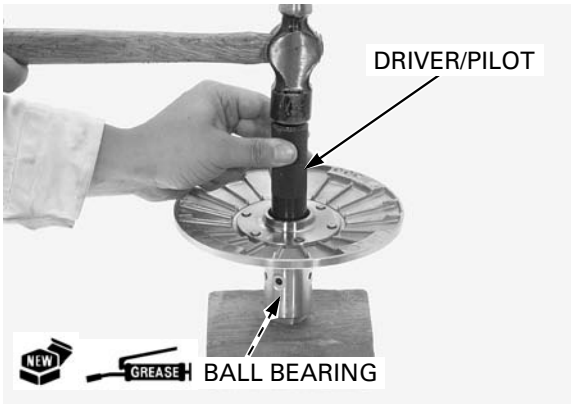

Install the snap ring to the groove in the driven face securely.

Apply 5 – 7 g of grease (Shell ALVANIA R3 or SHIN-NIHON POWERNOC WB3 or IDEMITSU AUTOREX B or equivalent) to the driven face boss inner surface.

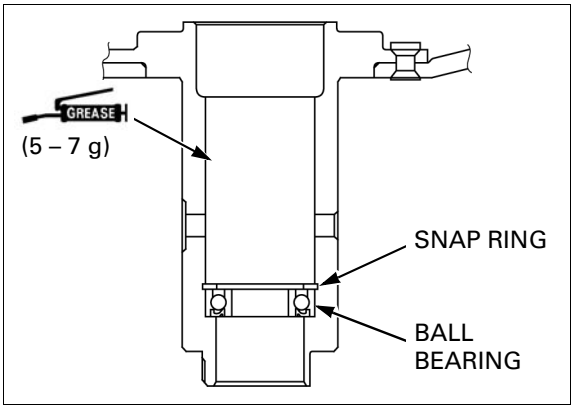

Apply grease to a new needle nearing rollers.

Install the needle bearing into the driven face squarely with the sealed side facing up so that the depth from the driven face surface is 0.8 mm (0.03 in) using the special tool.

TOOLS:

Driver	**07749-0010000**
Attachment, 32 x 35 mm	**07746-0010100**
Pilot, 25 mm	**07746-0040600**

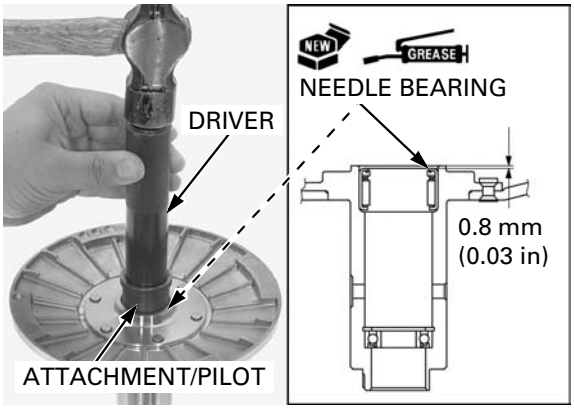

INSPECTION

DRIVEN FACE SPRING

Measure the driven face spring free length.

SERVICE LIMIT: 106 mm (4.2 in)

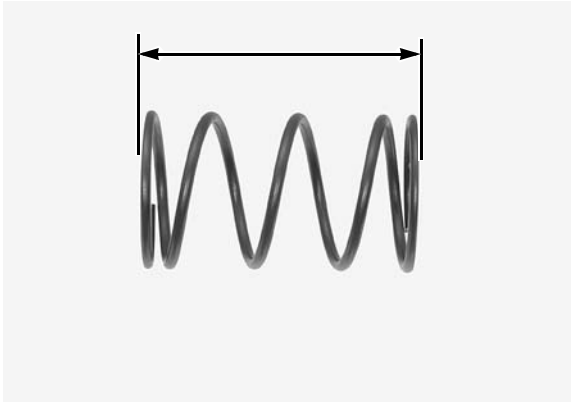

DRIVEN FACE

Check the driven face for scratches, scoring or damage.

Measure the driven face boss O.D.

SERVICE LIMIT: 39.94 mm (1.572 in)

MOVABLE DRIVEN FACE

Check the movable driven face for scratches, scoring or damage.
Check the guide grooves for stepped wear or damage.

Measure the movable driven face I.D.

SERVICE LIMIT: 40.06 mm (1.577 in)

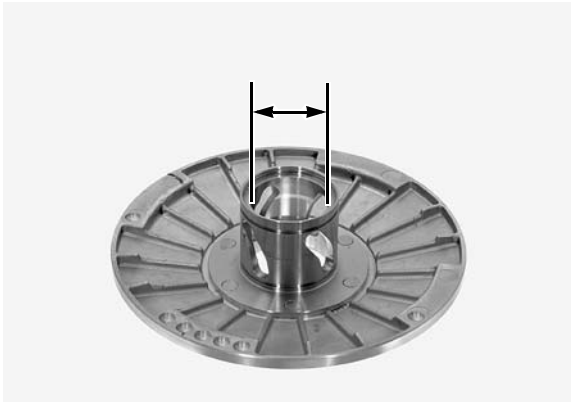

ASSEMBLY

NOTICE

- *Apply specified quantity of grease to the inside of the driven face and the guide grooves in the movable driven face.*
- *Avoid getting grease or oil on the clutch shoe linings and driven pulley faces. Discard contaminated clutch shoes and clean contaminated pulley faces with a high quality degreasing agent.*

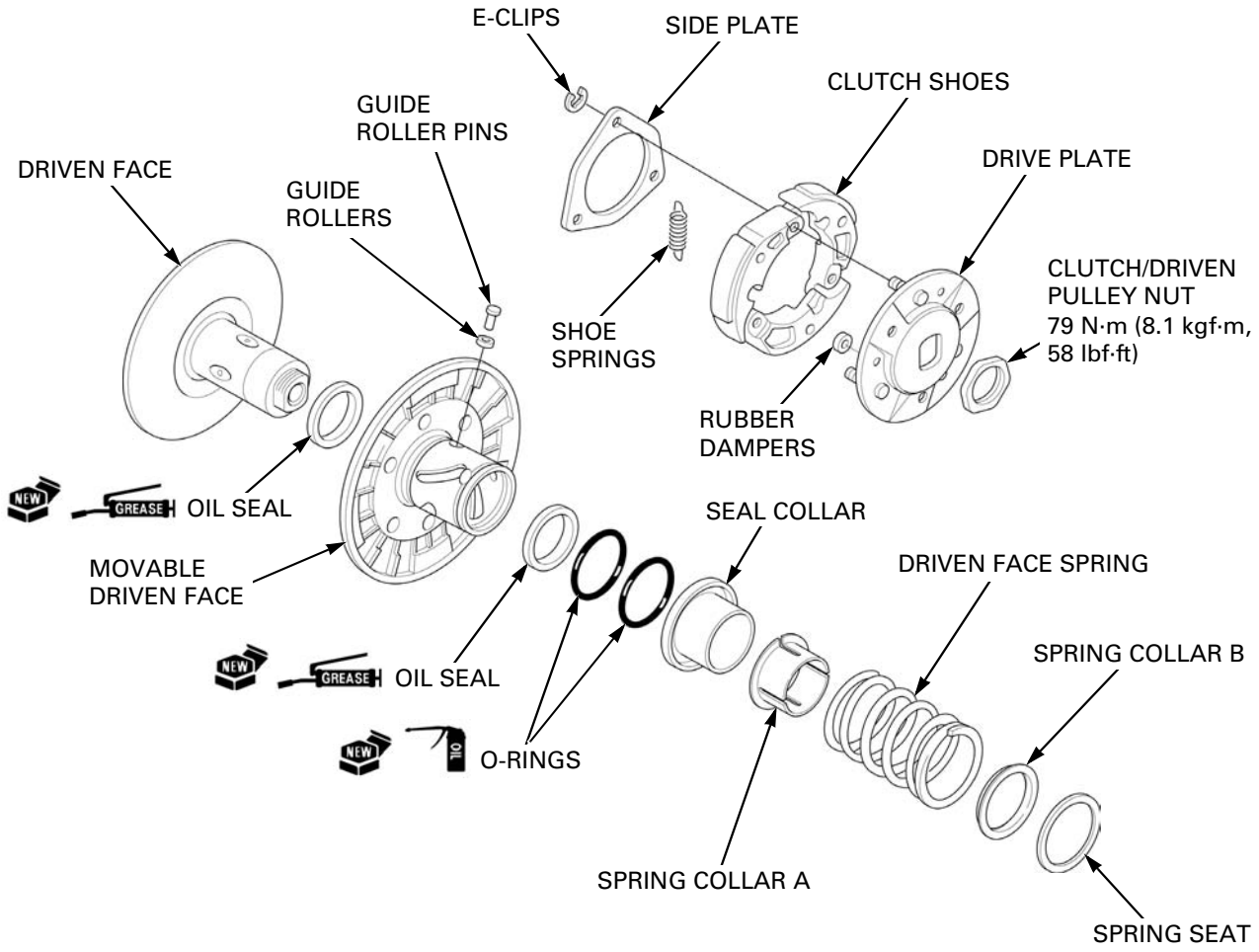

DRIVEN PULLEY

Apply grease to new oil seal lips and outer surfaces, and install them into the movable driven face.

Coat new O-rings with engine oil and install them into grooves in the movable driven face.

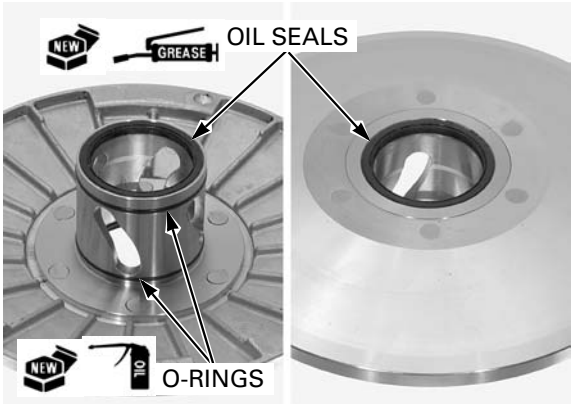

Clean any oil and grease from the pulley face.

Install the movable driven face onto the driven face. Install the rollers and guide pins.

Apply 4 – 5 g of grease (Shell ALVANIA R3 or SHIN-NIHON POWERNOC WB3 or IDEMITSU AUTOREX B or equivalent) to the guide grooves.

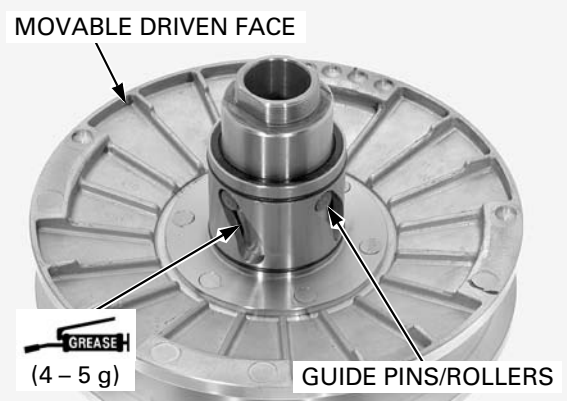

Install the seal collar onto the driven pulley. Clean any oil and grease from the pulley face.

CLUTCH

Install the rubber dampers onto the drive plate.

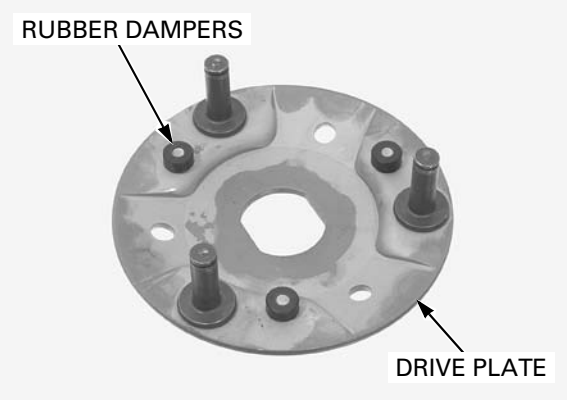

Install the clutch shoes and shoe springs onto the drive plate.

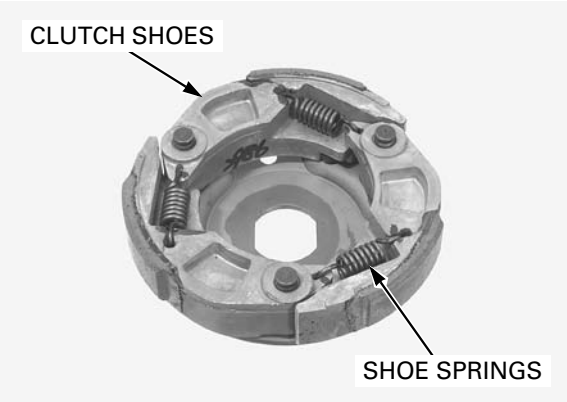

Install the clutch side plate and secure it with the E-clips

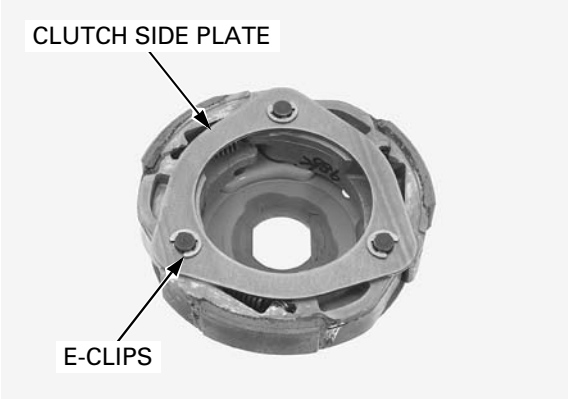

CLUTCH/DRIVEN PULLEY

Assemble the following:

- driven pulley assembly
- spring collar A
- driven face spring
- spring collar B
- spring seat
- clutch assembly

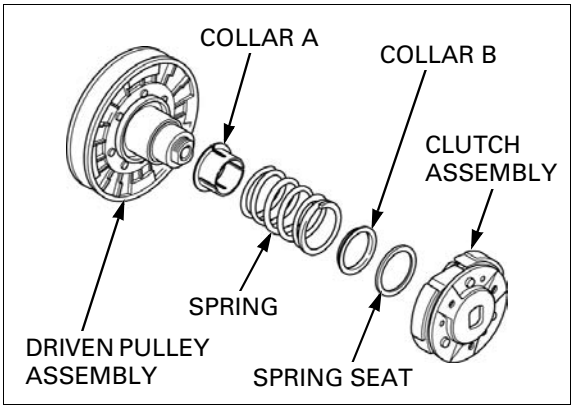

Set the clutch spring compressor over the clutch/driven pulley assembly by aligning the bosses with the holes in the clutch.

TOOL:
Clutch spring compressor 07LME-GZ40201

To prevent loss of tension, do not compress the clutch spring more than necessary to install the clutch/driven pulley nut.

Compress the driven face spring while aligning the flat surfaces of the driven pulley and clutch.
Install the clutch/driven pulley nut.

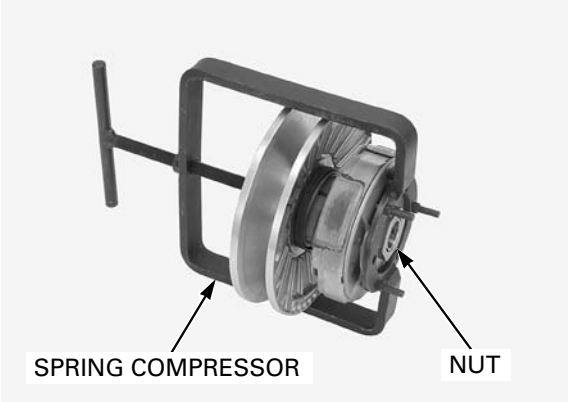

Hold the spring compressor in a vice and tighten the clutch/driven pulley nut using the special tool to the specified torque.

TOOL:
Socket wrench, 39 x 41 mm 07GMA-KS40100

TORQUE: 79 N·m (8.1 kgf·m, 58 lbf·ft)

Remove the clutch/driven pulley assembly from the spring compressor.

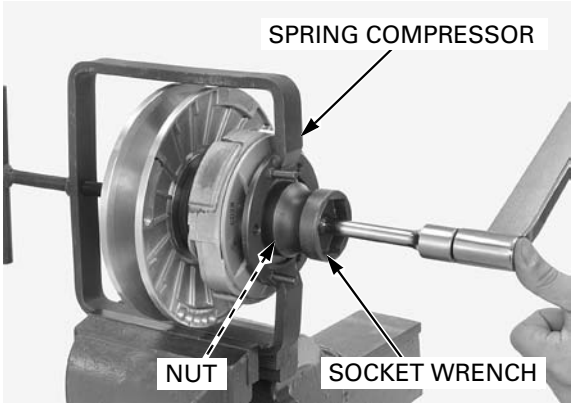

INSTALLATION

Install the clutch/driven pulley assembly with the drive belt (page 11-7).

Clean any oil and grease from the clutch outer.

Install the clutch outer onto the driveshaft by aligning the spline.

Apply grease to the new O-rings and install its to the bearing collar grooves.
Apply molybdenum disulfide paste (SUMICO MOLY-PASTE 300 or 500 or equivalent) to the bearing collar groove.

Install the bearing collar onto the driveshaft.

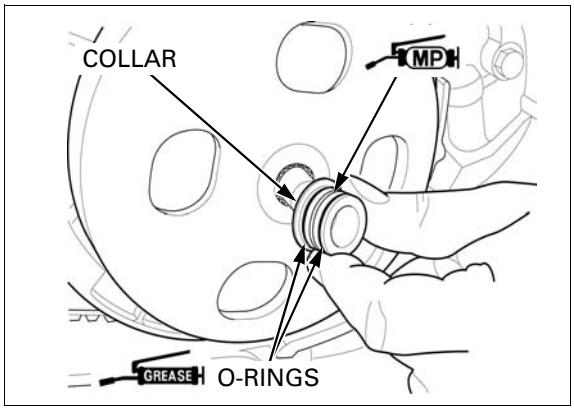

Install the clutch outer nut onto the driveshaft.

Hold the clutch outer with the special tool and tighten the clutch outer nut to the specified torque.

TOOL:
Flywheel holder 07725-0040001

TORQUE: 74 N·m (7.5 kgf·m, 55 lbf·ft)

Install the drive pulley face (page 11-9).

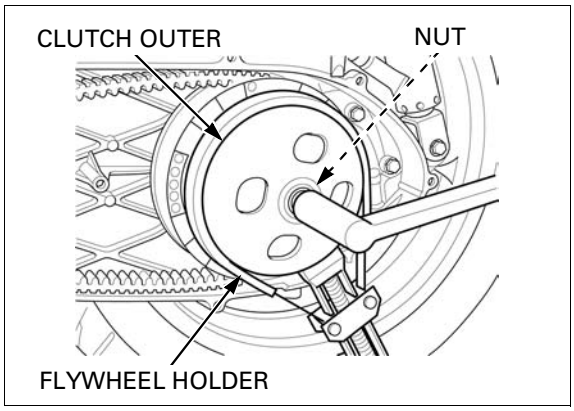

MEMO

12. FINAL REDUCTION

COMPONENT LOCATION 12-2

SERVICE INFORMATION 12-3

TROUBLESHOOTING 12-5

FINAL REDUCTION DISASSEMBLY/ INSPECTION 12-6

BEARING REPLACEMENT 12-8

FINAL REDUCTION ASSEMBLY 12-11

COMPONENT LOCATION

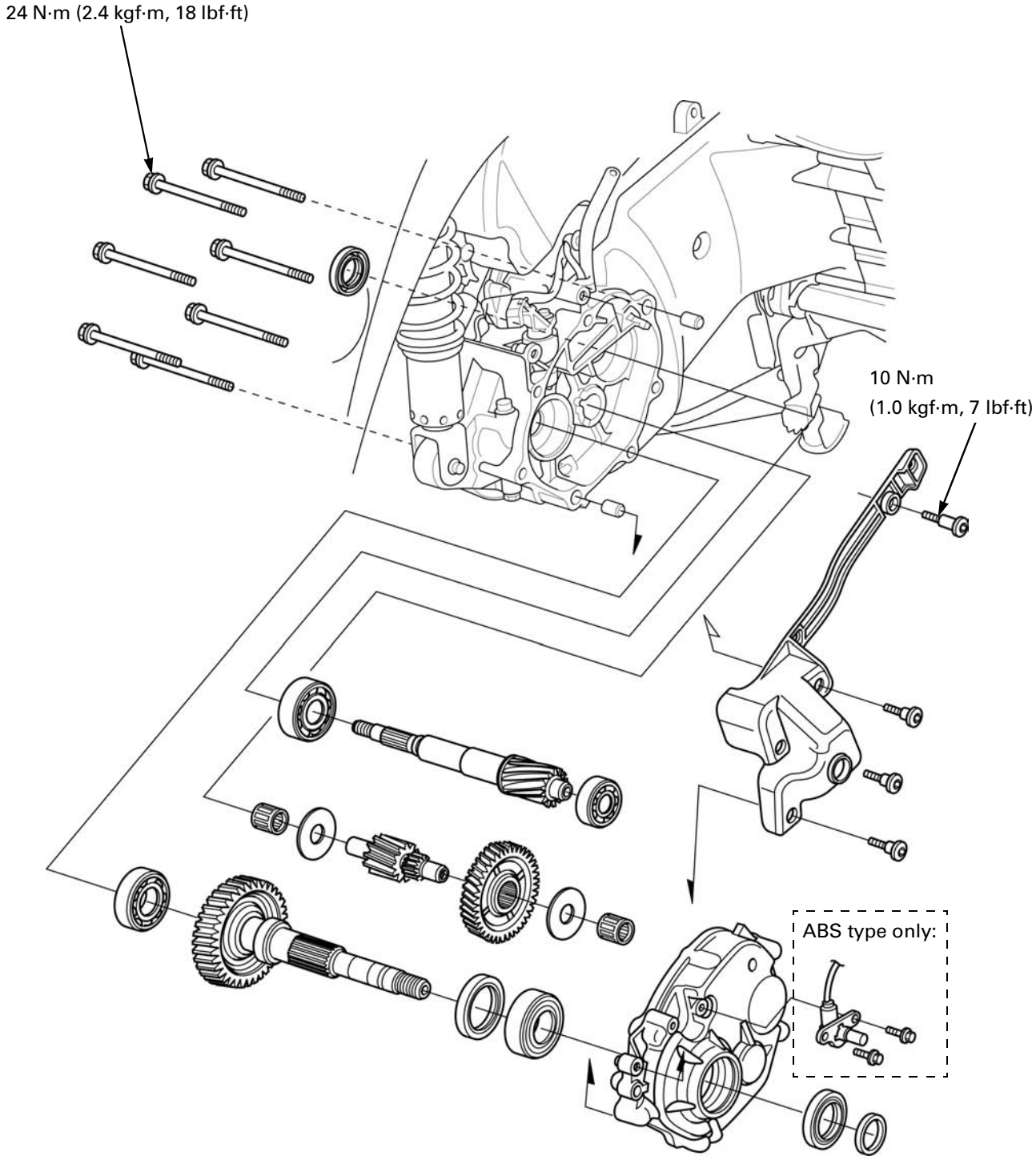

SERVICE INFORMATION

GENERAL

- The final reduction can be serviced with the engine installed in the frame.
- For final reduction oil level check and change (page 4-17).
- When installing the driveshaft, be sure to use the special tools; position the special tools against the bearing inner race and pull the driveshaft into the bearing until it is fully seated.

SPECIFICATIONS

ITEM		SPECIFICATIONS
Final drive oil capacity	After draining	0.28 liter (0.30 US qt, 0.25 Imp qt)
	After disassembly	0.30 liter (0.32 US qt, 0.26 Imp qt)
Recommended final drive oil		Honda "4-stroke motorcycle oil" or an equivalent API service classification: SG or higher (except oils labeled as energy conserving on the circular API service label) Viscosity: SAE 10W-30 JASO T 903 standard: MA

TORQUE VALUE

Final reduction case bolt	24 N·m (2.4 kgf·m, 18 lbf·ft)	
Sensor protector socket bolt	10 N·m (1.0 kgf·m, 7 lbf·ft)	ALOC bolt; replace with a new one

TOOLS

Case puller 07SMC-0010001 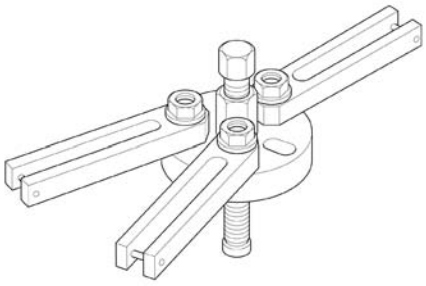	Bearing remover head, 14 mm 07WMC-KFG0100 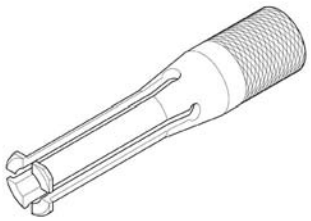	Bearing remover head, 15 mm 07936-KC10200 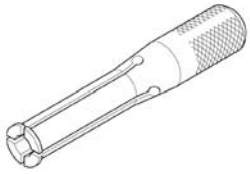
Bearing remover shaft 07936-KC10100 	Bearing remover, 20 mm 07936-3710600 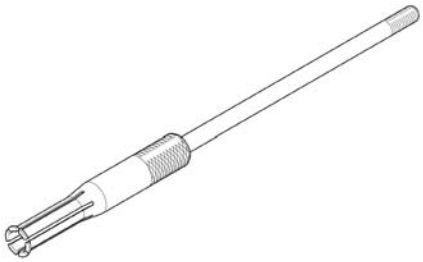	Bearing remover handle 07936-3710100 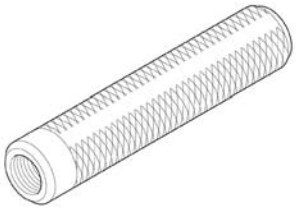

Remover weight 07741-0010201 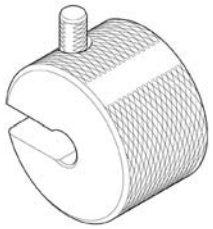	Driver 07749-0010000 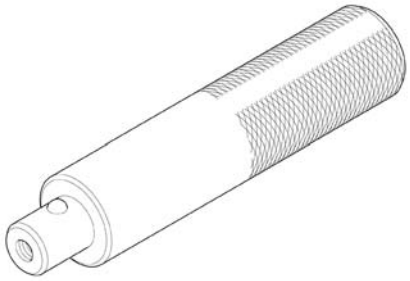	Attachment, 22 x 24 mm 07746-0010800
Attachment, 42 x 47 mm 07746-0010300 	Attachment, 48.2 x 51.5 mm 07946-3290000 	Attachment, 52 x 55 mm 07746-0010400
Pilot, 14 mm 07746-0041200 	Pilot, 15 mm 07746-0040300 	Pilot, 20 mm 07746-0040500
Pilot, 25 mm 07746-0040600 	Assembly shaft 07965-VM00200 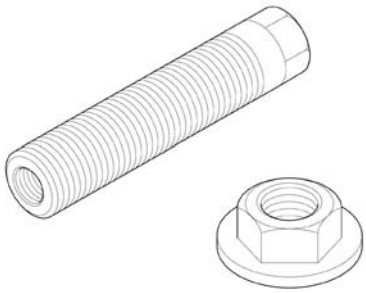	Assembly collar 07YMF-KPB0100 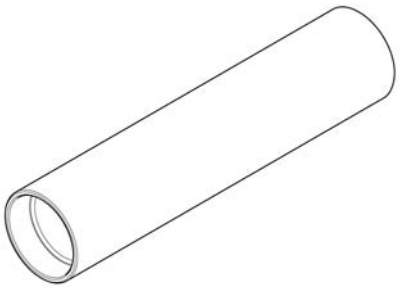

TROUBLESHOOTING

Engine does start but scooter won't move
- Damaged final reduction
- Seized final reduction
- Faulty drive pulley and driven pulley/clutch (page 11-4)

Abnormal noise
- Worn, seized or chipped gears
- Worn or damaged final reduction bearing

Oil leak
- Oil level too high
- Worn or damaged oil seal
- Cracked crankcase and/or final reduction case

FINAL REDUCTION DISASSEMBLY/ INSPECTION

Remove the following:

- clutch/driven pulley (page 11-11)
- rear wheel (page 16-5)
- sensor protector (page 18-25)

ABS type only. – rear wheel speed sensor (page 18-25)

Drain the final drive oil (page 4-17).

Remove the following from the left crankcase:

- seven bolts

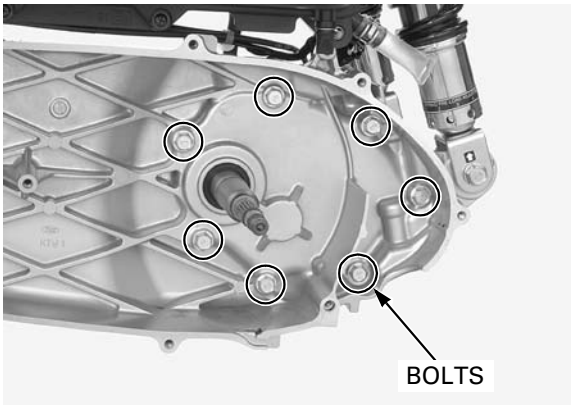

- final reduction case

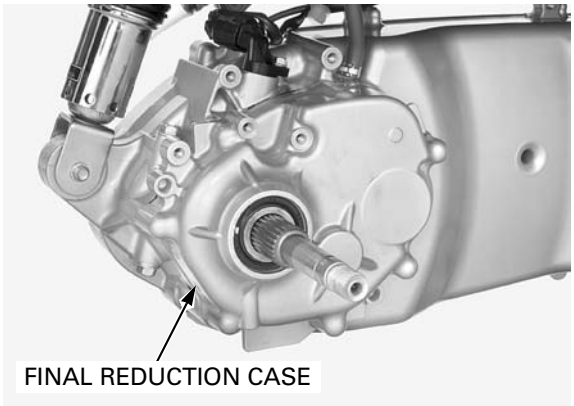

- two dowel pins

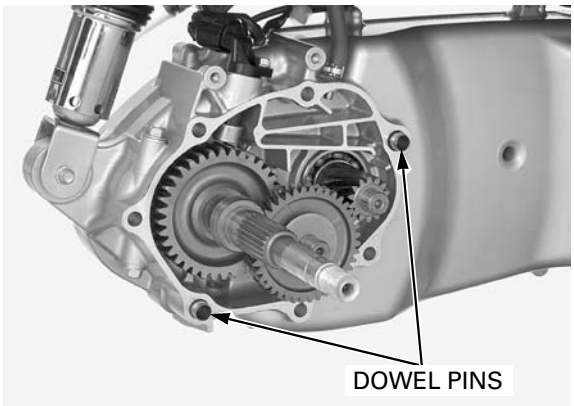

- thrust washer (right side)
- counter gear
- countershaft
- thrust washer (left side)
- final gear shaft

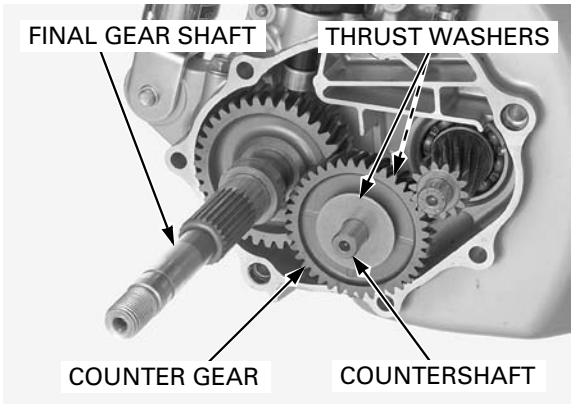

Check the final gear shaft and driveshaft ball bearings in the left crankcase.
Turn the inner race of each bearing with your finger. The bearing should turn smoothly and quietly.

Check the counter shaft needle bearing in the left crankcase for wear or damage.

Also check that the bearing outer race fits tightly in the crankcase.

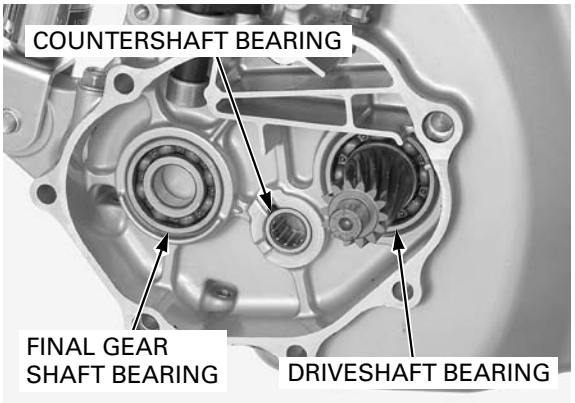

Check the oil seal for wear, damage or deterioration.

Check the final gear shaft and driveshaft ball bearings in the final reduction case.
Turn the inner race of each bearing with your finger. The bearing should turn smoothly and quietly.

Check the countershaft needle bearing in the final reduction case for wear or damage.

Also check that the bearing outer race fits tightly in the final reduction case.

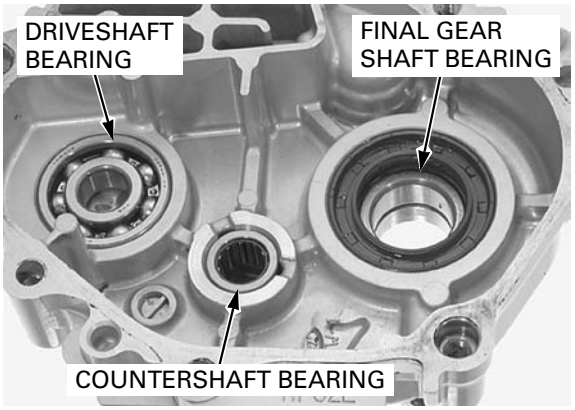

Use three 10 mm nuts to the case puller.

TOOL:

Case puller	**07SMC-0010001**

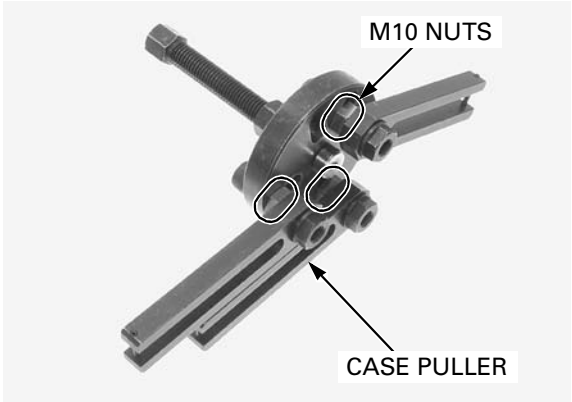

Remove the driveshaft using the case puller.

Remove the oil seal from the crankcase.

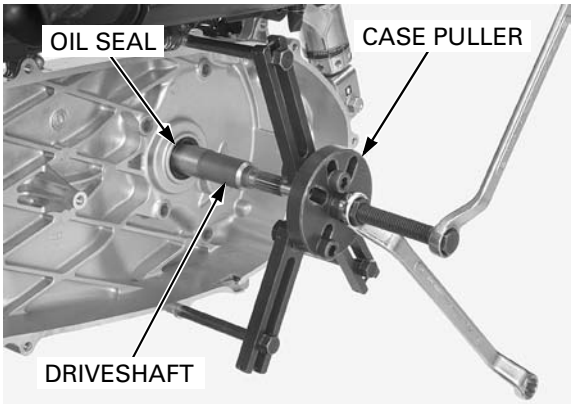

If the bearing is left on the driveshaft, remove it using a hydraulic press.

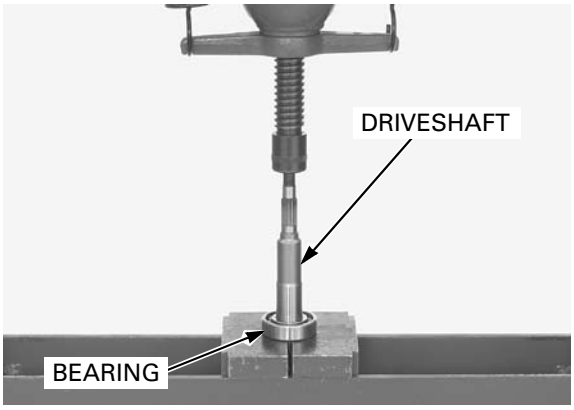

Check the countershaft, counter gear, final gear shaft and driveshaft for wear or damage.

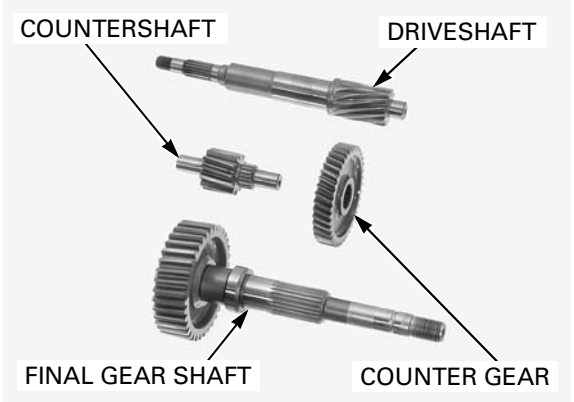

BEARING REPLACEMENT

NOTICE

Be careful not to damage the mating surfaces of the crankcase and final reduction case.

Disassemble the final reduction (page 12-6).

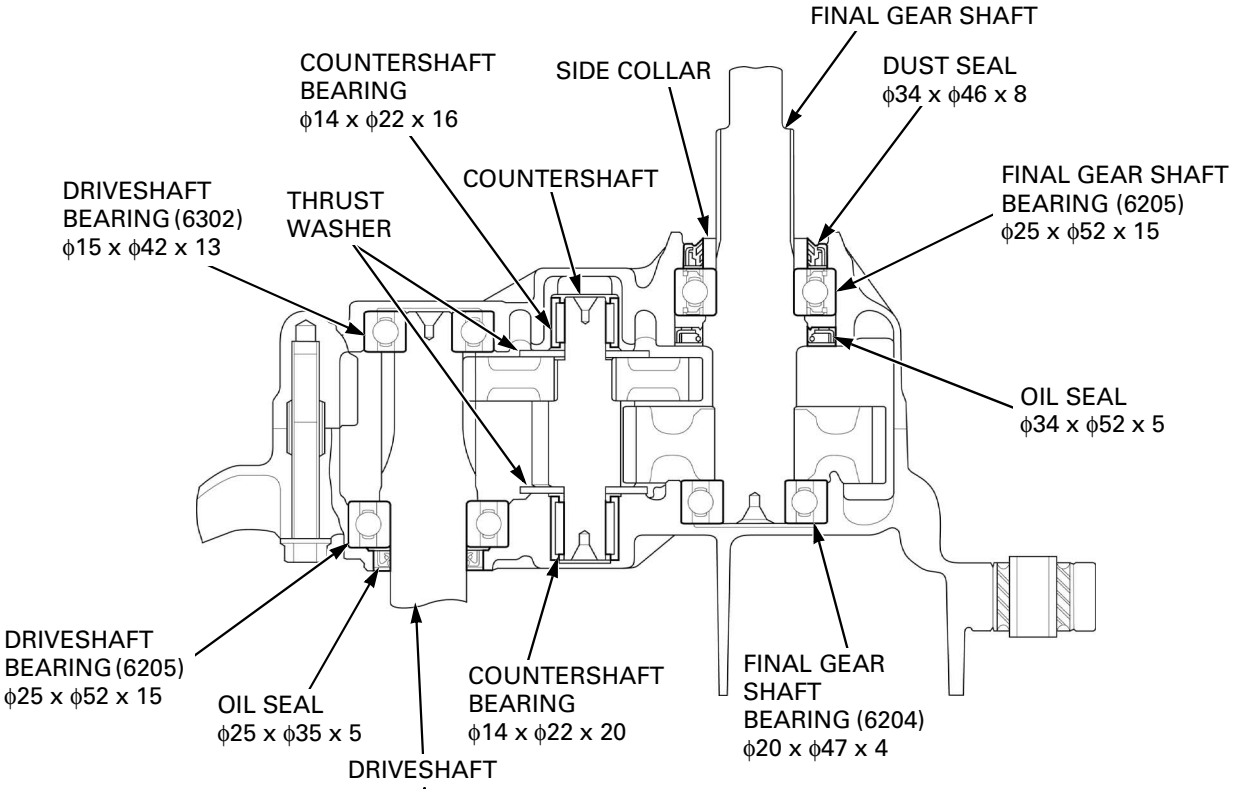

LEFT CRANKCASE

Be careful not to damage the final reduction case mating surface.

Remove the driveshaft bearing if it remains in the crankcase.

Remove the countershaft and final gear shaft bearings using the special tools.

TOOLS:

Countershaft bearing:	
Bearing remover head, 14 mm	**07WMC-KFG0100**
Bearing remover shaft	**07936-KC10100**
Remover weight	**07741-0010201**
Final gear shaft bearing:	
Bearing remover, 20 mm	**07936-3710600**
Bearing remover handle	**07936-3710100**
Remover weight	**07741-0010201**

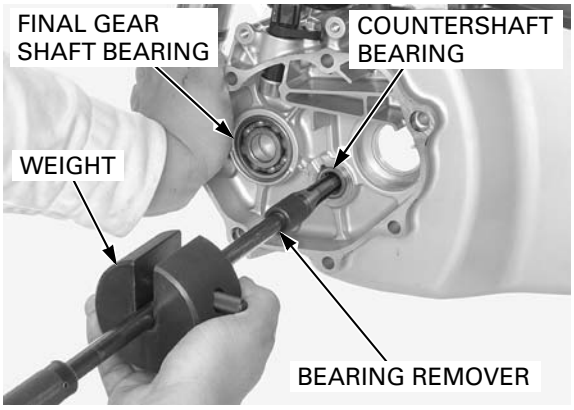

Apply engine oil to the bearing cavity.

Drive new bearings into the left crankcase with the marked side facing the attachment until it is fully seated, using the special tools.

TOOLS:

Countershaft bearing:	
Driver	**07749-0010000**
Attachment, 22 x 24 mm	**07746-0010800**
Pilot, 14 mm	**07746-0041200**
Final gear shaft bearing:	
Driver	**07749-0010000**
Attachment, 42 x 47 mm	**07746-0010300**
Pilot, 20 mm	**07746-0040500**
Driveshaft bearing:	
Driver	**07749-0010000**
Attachment, 48.2 x 51.5 mm	**07946-3290000**
Pilot, 25 mm	**07746-0040600**

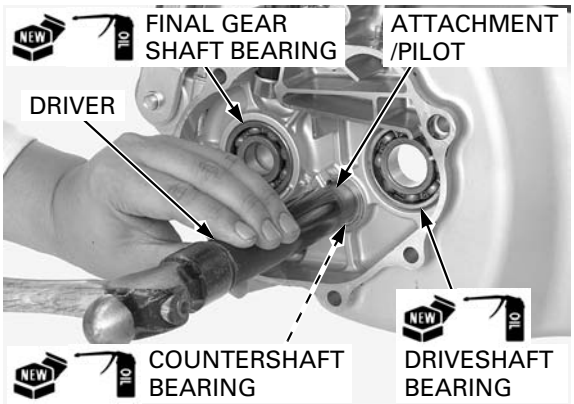

FINAL REDUCTION CASE

Remove the side collar, final gear shaft dust seal and oil seal from the final reduction case.

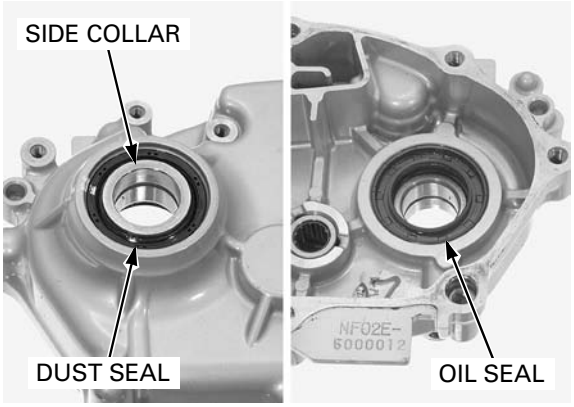

Be careful not to damage the final reduction case mating surface.

Drive the final gear shaft bearing out of the reduction case.

Remove the driveshaft and countershaft bearings using the special tools.

TOOLS:

Driveshaft bearing:	
Bearing remover head, 15 mm	**07936-KC10200**
Bearing remover shaft	**07936-KC10100**
Remover weight	**07741-0010201**
Countershaft bearing:	
Bearing remover head, 14 mm	**07WMC-KFG0100**
Bearing remover shaft	**07936-KC10100**
Remover weight	**07741-0010201**

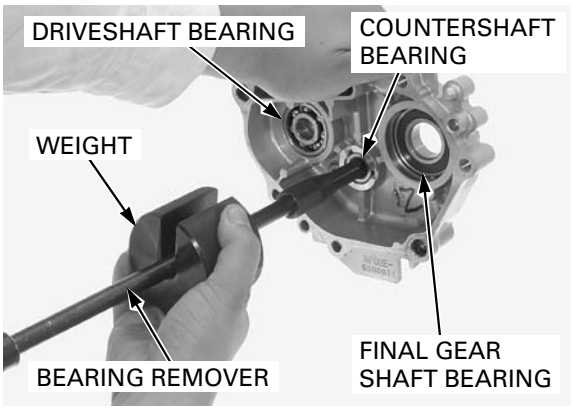

Apply engine oil to the bearing cavity.

Drive new bearings into the final reduction case with the marked side facing up until it is fully seated, using the special tools.

TOOLS:

Driveshaft bearing:	
Driver	**07749-0010000**
Attachment, 42 x 47 mm	**07746-0010300**
Pilot, 15 mm	**07746-0040300**
Countershaft bearing:	
Driver	**07749-0010000**
Attachment, 22 x 24 mm	**07746-0010800**
Pilot, 14 mm	**07746-0041200**
Final gear shaft bearing:	
Driver	**07749-0010000**
Attachment, 52 x 55 mm	**07746-0010400**
Pilot, 25 mm	**07746-0040600**

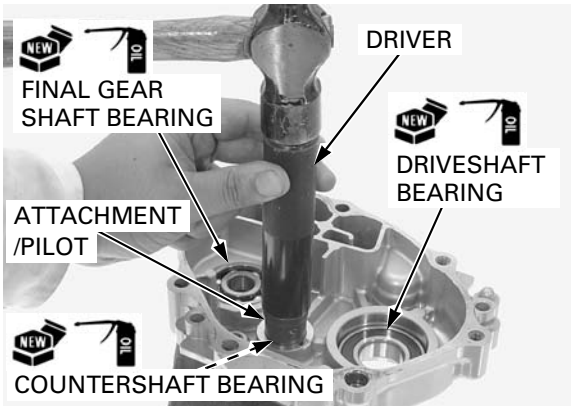

Apply engine oil to lips and outer surface of a new final gear shaft oil seal.

Install the oil seal with the flat side facing down (bearing side) so that the depth from the final reduction case surface is 0.5 – 1.0 mm (0.02 – 0.04 in).

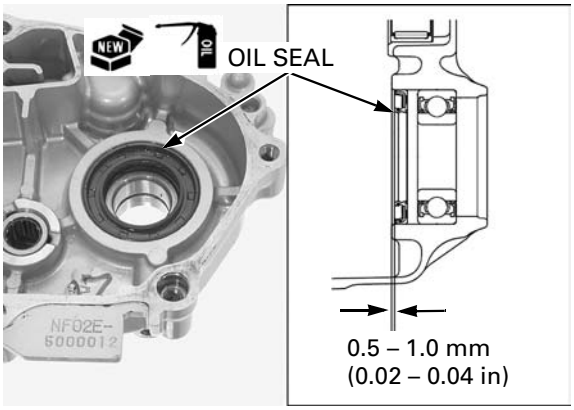

Apply grease to a new final shaft dust seal lip.

Install the dust seal so that the depth from the final reduction case surface is 3.0 – 3.5 mm (0.12 – 0.14 in).

Install the side collar into the dust seal.

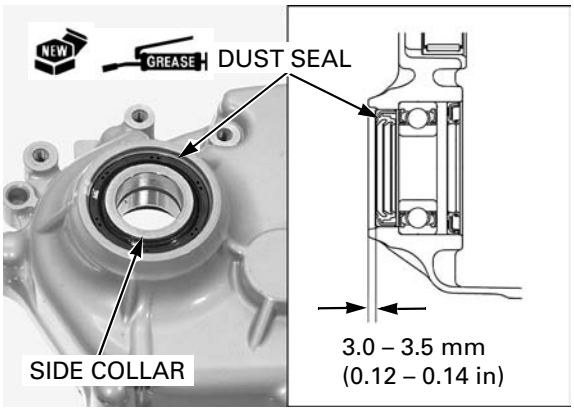

FINAL REDUCTION ASSEMBLY

Clean the mating surfaces of the final reduction case and left crankcase.

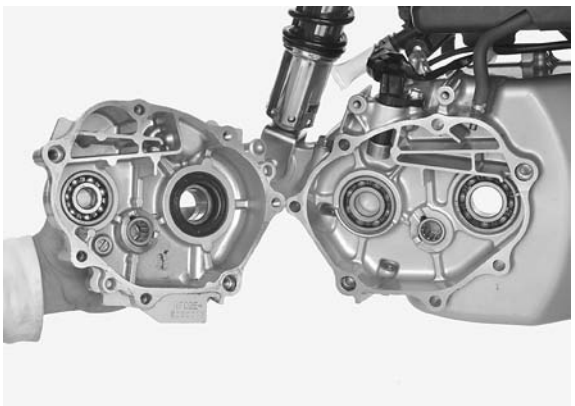

Install the driveshaft into the bearing.
Position the assembly collar against the driveshaft bearing inner race and pull the driveshaft into the bearing until it is fully seated.

TOOLS:

Assembly shaft	**07965-VM00200**
Assembly collar	**07YMF-KPB0100**

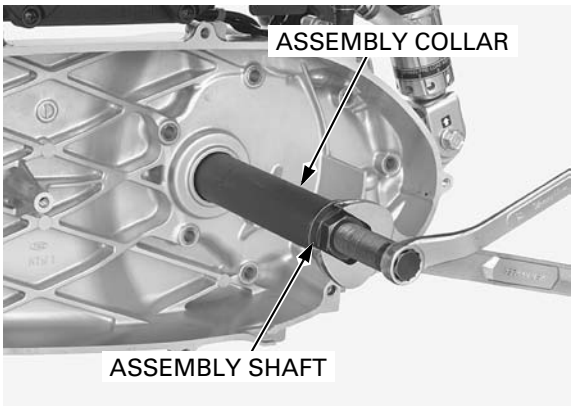

Apply engine oil to the lips and outer surface of a new driveshaft oil seal.

Install the oil seal until it is flush with the crankcase using the same tools.

TOOLS:

Assembly shaft	**07965-VM00200**
Assembly collar	**07YMF-KPB0100**

Apply engine oil to the counter gear teeth and shaft sliding surfaces.
Apply engine oil to the final gear teeth and shaft journal.

Assemble the final gear and counter gear, and install the final gear shaft, thrust washers, countershaft and counter gear into the left crankcase.

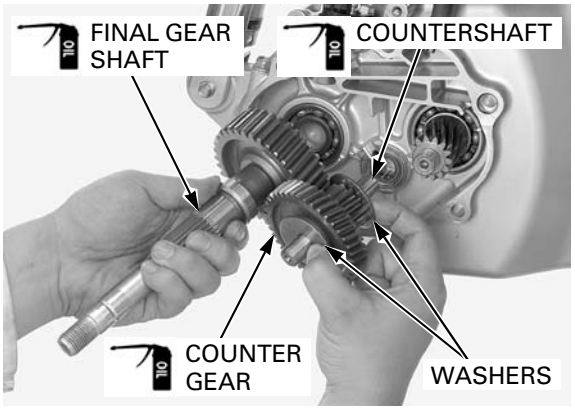

Install the two dowel pins.

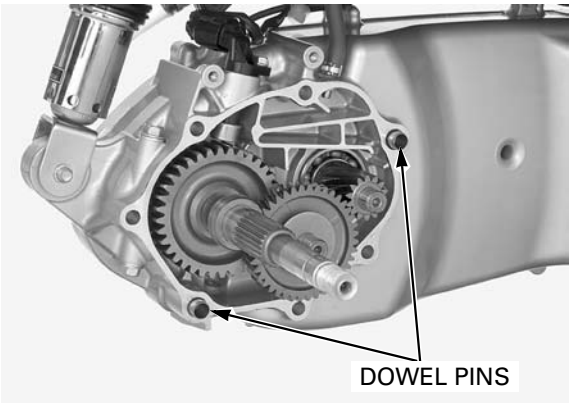

Apply sealant (Three Bond 1207B or equivalent) to the final reduction case mating surface as shown.

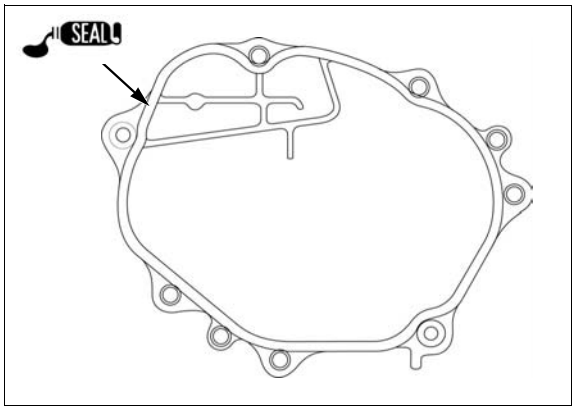

Install the final reduction case to the left crankcase.

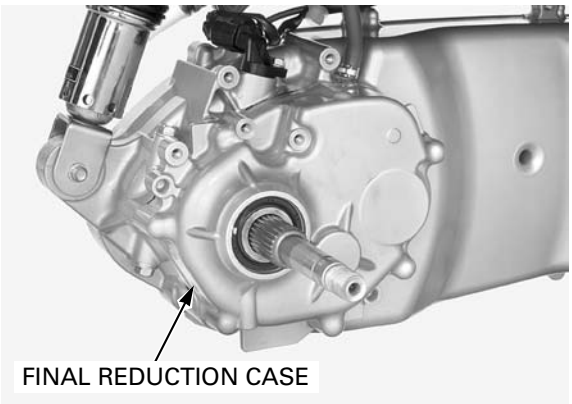

Install and tighten the seven bolts in a crisscross pattern in 2 or 3 steps to the specified torque.

TORQUE: 24 N·m (2.4 kgf·m, 18 lbf·ft)

Fill the final reduction case with the recommended oil (page 4-17).

Install the following:

ABS type only. – rear wheel speed sensor (page 18-25)

– sensor protector (page 18-25)
– rear wheel (page 16-10)
– clutch/driven pulley (page 11-19)

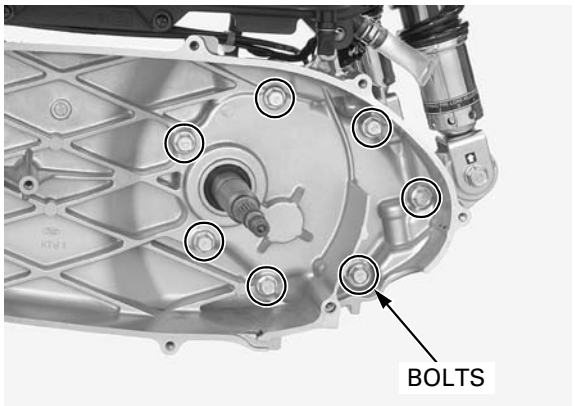

13. ALTERNATOR/STARTER CLUTCH

COMPONENT LOCATION 13-2

SERVICE INFORMATION 13-3

TROUBLESHOOTING 13-3

RIGHT CRANKCASE COVER 13-4

STATOR/CKP SENSOR 13-8

FLYWHEEL/STARTER CLUTCH 13-9

COMPONENT LOCATION

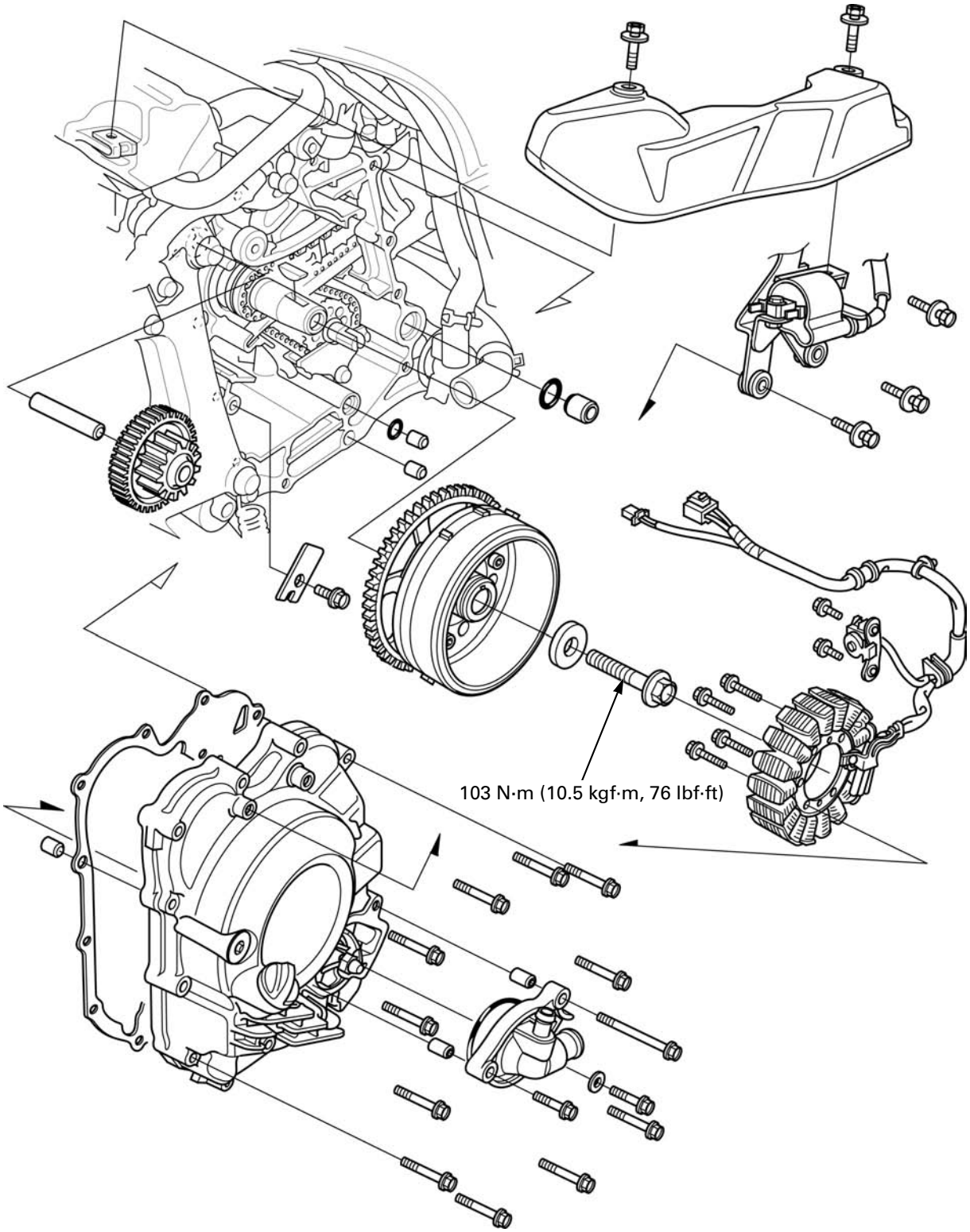

SERVICE INFORMATION

GENERAL

- This section covers the removal and installation of the flywheel, starter clutch and alternator/crankshaft position (CKP) sensor.
- These service can be done with the engine installed in the frame.
- For alternator inspection (page 19-8).
- For CKP sensor inspection (page 20-6).

SPECIFICATIONS

Unit: mm (in)

ITEM		STANDARD	SERVICE LIMIT
Starter driven gear	Boss O.D.	45.660 – 45.673 (1.7976 – 1.7981)	45.615 (1.6778)
	Bushing I.D.	25.026 – 25.045 (0.9853 – 0.9860)	25.100 (0.9882)
Starter clutch outer I.D.		62.319 – 62.345 (2.4535 – 2.4545)	62.395 (2.4565)

TORQUE VALUES

Starter clutch outer socket bolt	23 N·m (2.3 kgf·m, 17 lbf·ft)	Apply locking agent to the threads.
Flywheel bolt	103 N·m (10.5 kgf·m, 76 lbf·ft)	Apply engine oil to the threads and seating surface. UBS bolt.

TOOLS

Flywheel holder 07725-0040001 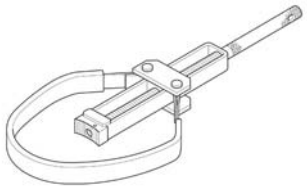	Flywheel puller 07933-KM10001 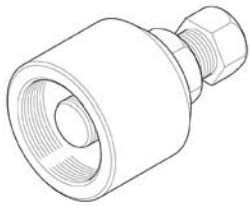

TROUBLESHOOTING

Engine does not turn
- Faulty starter one-way clutch
- Damage starter reduction gear

RIGHT CRANKCASE COVER

REMOVAL

Remove the following:

- luggage box (page 3-5)
- floor side cover (page 3-8)
- under cover (page 3-9)
- exhaust pipe/muffler (page 3-15)

Drain the engine oil (page 4-11).
Drain the coolant (page 7-7).

Disconnect the alternator 3P connector and CKP sensor 2P (red) connector.

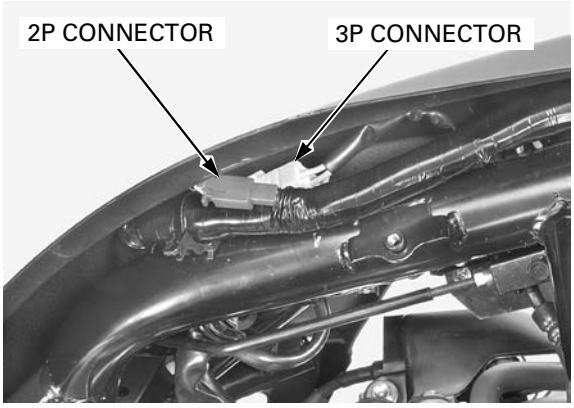

Remove the wire band from the stay.

Release the alternator/CKP sensor wire from the wire guide and remove them out of the frame.

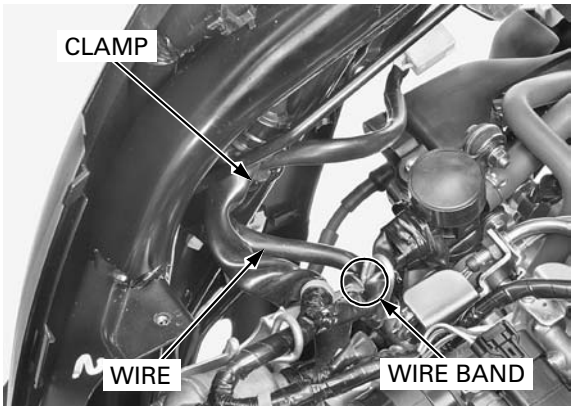

Remove the two washer bolts and ignition coil cover.

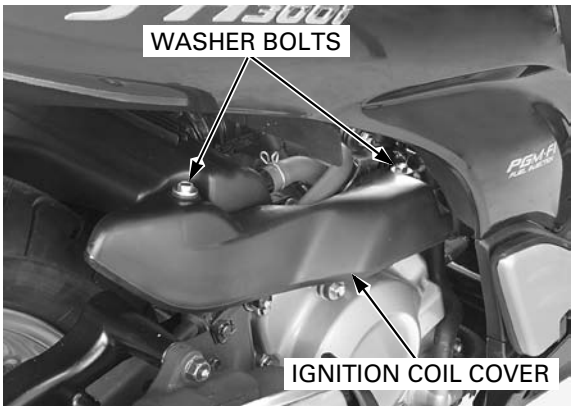

Remove the two ignition coil stay washer bolt from the right crankcase.

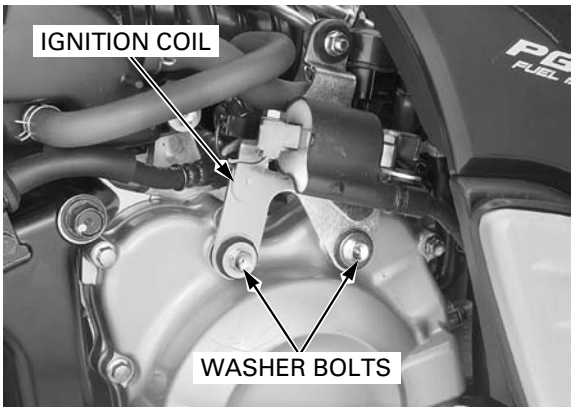

Loosen the hose band screw and disconnect the lower radiator hose from the water pump cover.

Disconnect the bypass hose from the water pump cover.

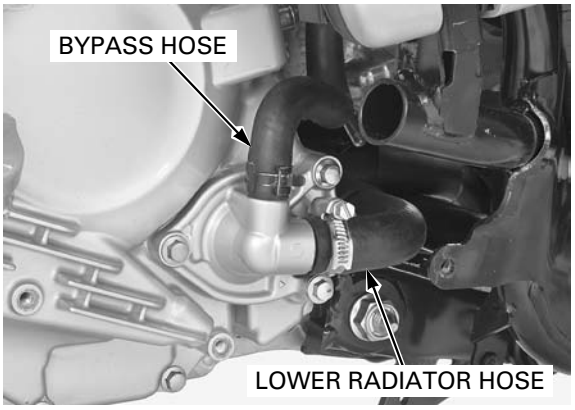

The right crankcase cover (stator) is magnetically attracted to the flywheel, be careful during removal.

Loosen the twelve bolts in a crisscross pattern in 2 or 3 steps, then remove the bolts and right crankcase cover.

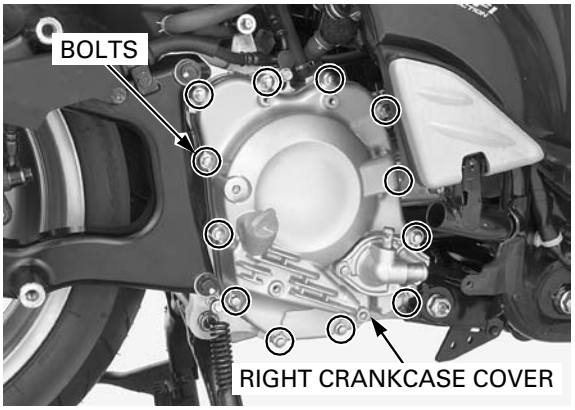

Remove the following:

- two dowel pins
- gasket
- water joint and O-ring
- oil joint and O-ring

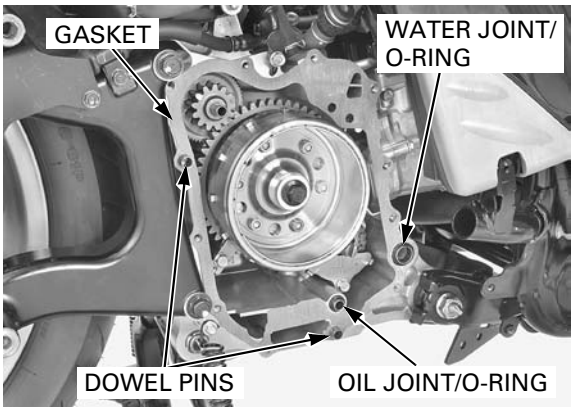

INSTALLATION

Install the new O-ring and oil joint.
Install the new O-ring and water joint.
Install the two dowel pins and a new gasket.

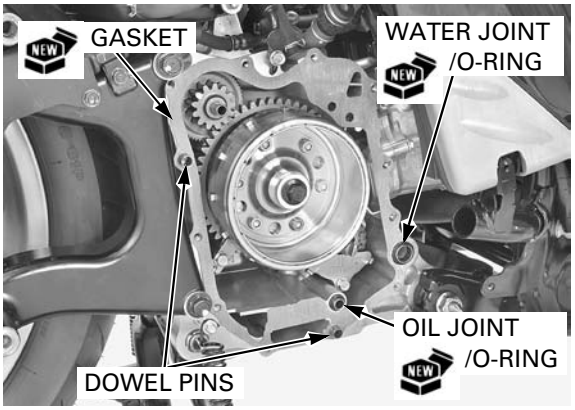

Align the groove on the oil pump bolt with the index mark on the oil pump cover while aligning the tab on the water pump shaft with the cutout on the case as shown.

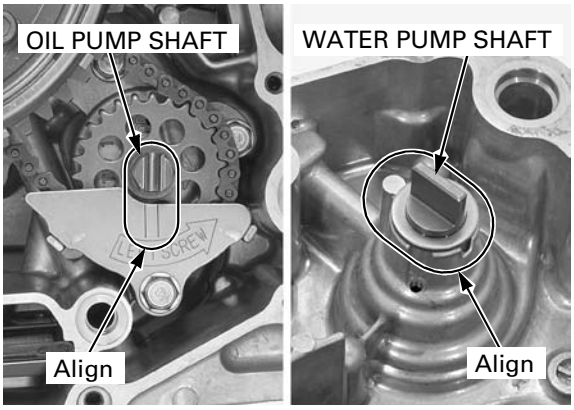

The right crankcase cover (stator) is magnetically attracted to the flywheel, be careful during installation.

Install the right crankcase cover by aligning the oil pump shaft groove with the water pump shaft tab.

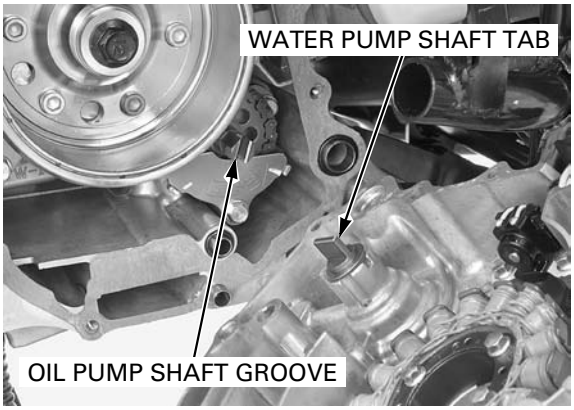

Install and tighten the ten bolts in a crisscross pattern in 2 or 3 steps.

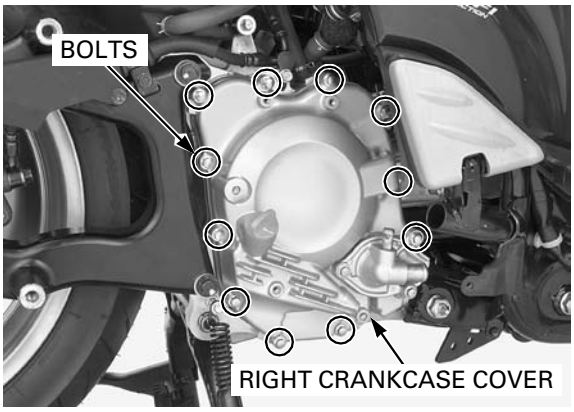

Connect the bypass hose to the water pump cover.

Connect the lower radiator hose to the water pump cover and tighten the hose band screw.

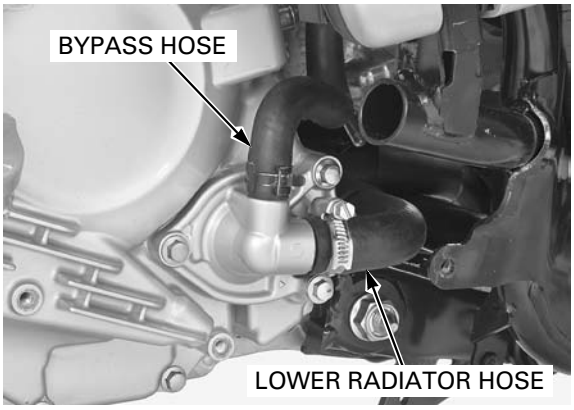

Install the ignition coil stay washer bolts and tighten them.

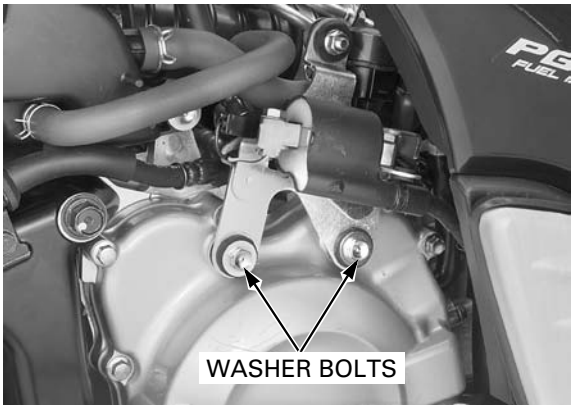

Install ignition coil cover and tighten the two washer bolts.

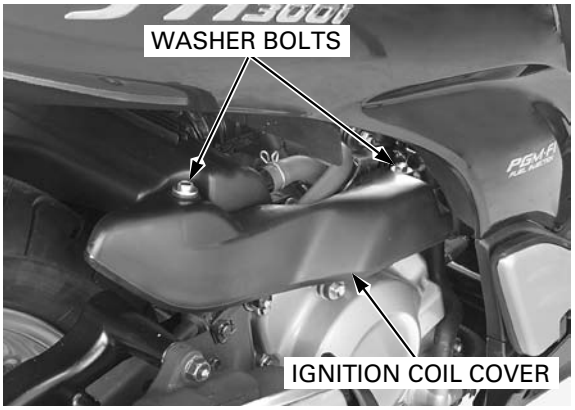

Route the wires properly (page 1-19).

Install the alternator/CKP sensor wire into the wire guide and install the wire band onto the stay.

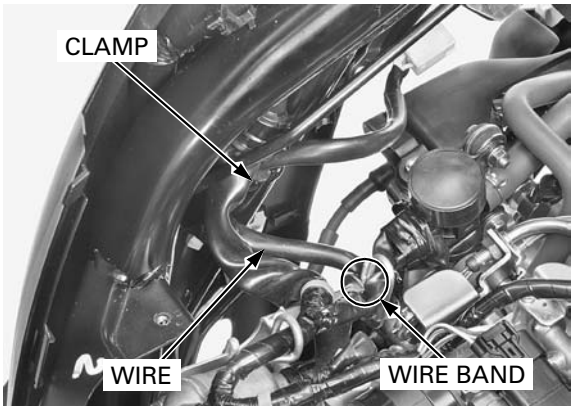

Connect the alternator 3P and CKP sensor 2P (red) connector.

Install the following:

- exhaust pipe/muffler (page 3-15)
- under cover (page 3-9)
- floor side cover (page 3-8)
- luggage box (page 3-5)

Fill the crankcase with the recommended engine oil (page 4-11).
Fill the system with the recommended coolant and bleed any air (page 7-6).

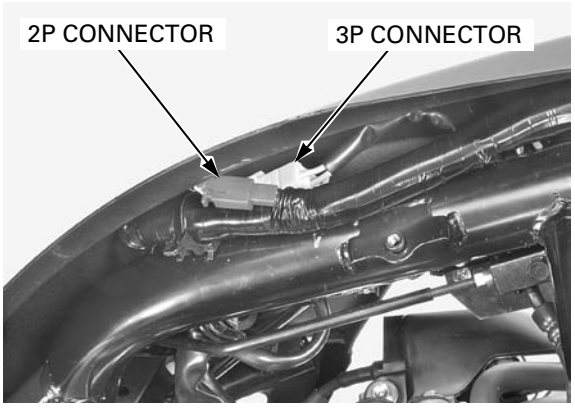

STATOR/CKP SENSOR

REMOVAL

Remove the right crankcase cover (page 13-4).

Remove the following from the right crankcase cover:

- four bolts and stator
- two bolts and CKP sensor
- wire grommet

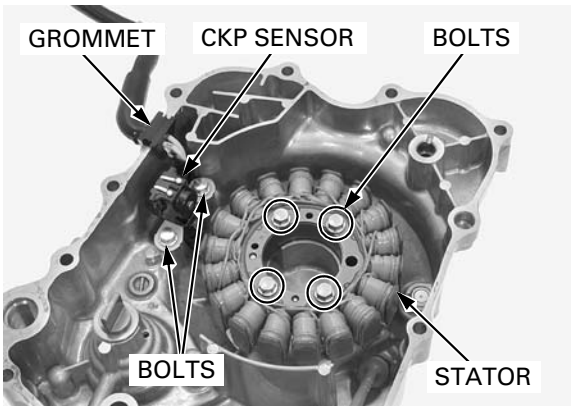

INSTALLATION

Install the stator and tighten the four bolts.

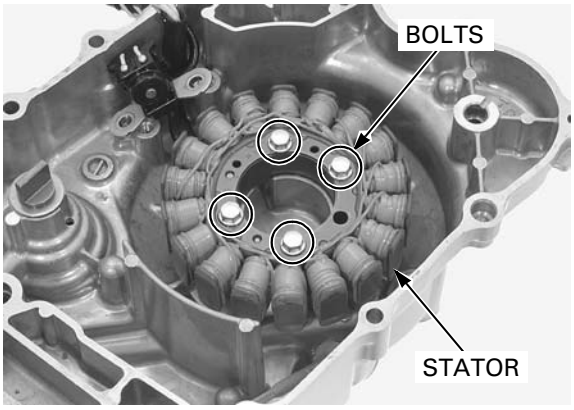

Install the CKP sensor and tighten the two bolts.

Set the wire grommet into the right crankcase cover groove properly.

Install the right crankcase cover (page 13-5).

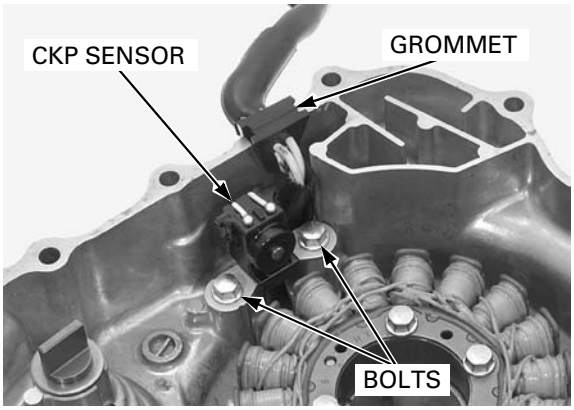

FLYWHEEL/STARTER CLUTCH

REMOVAL

Remove the right crankcase cover (page 13-4).

Remove the bolt and starter driven gear guide.

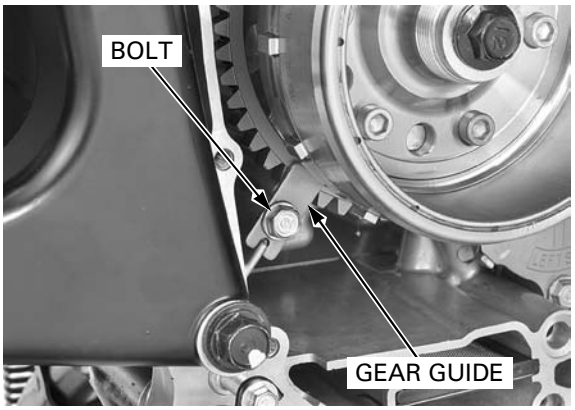

Hold the flywheel with the special tool and loosen the flywheel bolt.

TOOL:
Flywheel holder **07725-0040001**

Remove the flywheel bolt and washer.

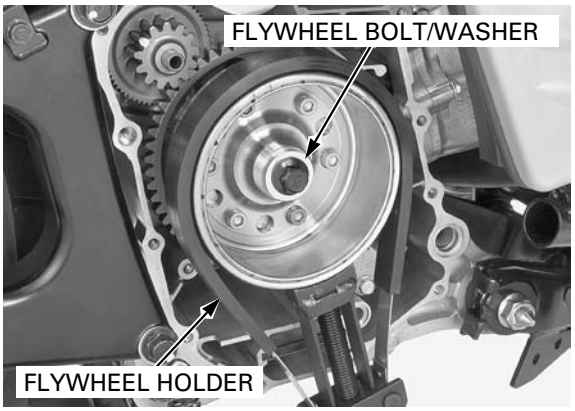

Screw the flywheel bolt in until its threads are not visible, then install a special tool.

TOOL:
Flywheel puller **07933-KM10001**

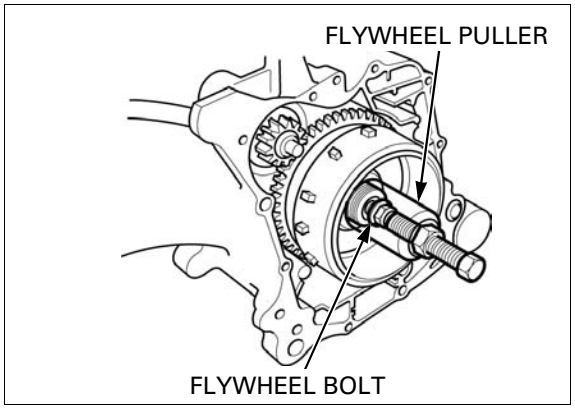

Slide off the flywheel from the crankcase using the flywheel puller.

Remove the flywheel puller, bolt and flywheel.

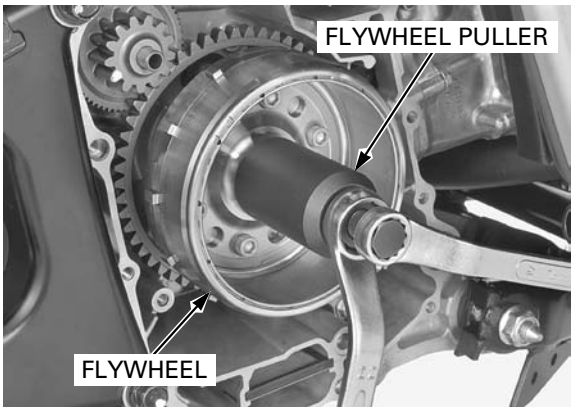

Remove the starter reduction gear shaft and reduction gear.

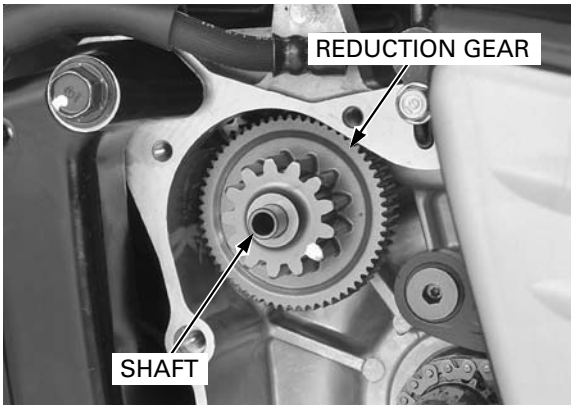

Remove the woodruff key from the crankshaft.

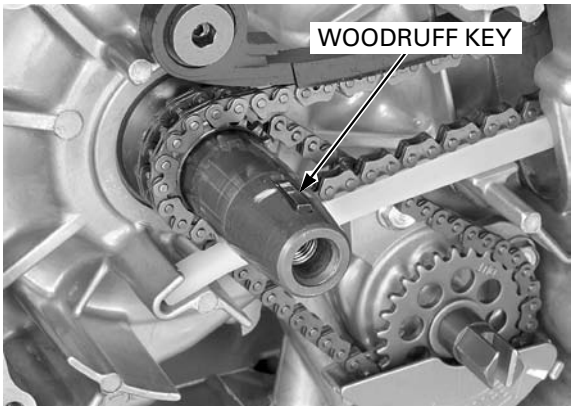

DISASSEMBLY

Check the operation of the sprag clutch by turning the driven gear.
You should be able to turn the driven gear clockwise smoothly, but the gear should not turn counterclockwise.

Remove the starter driven gear from the starter clutch on the flywheel while turning it clockwise.

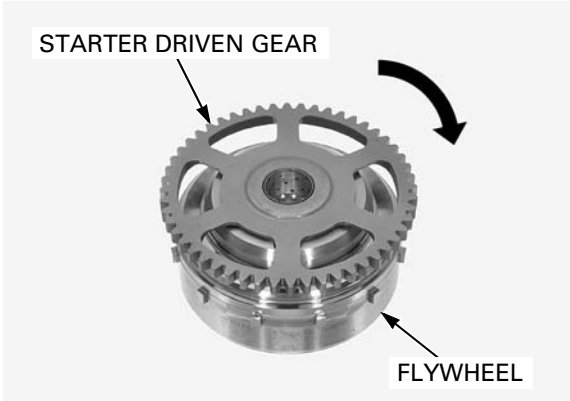

Hold the flywheel with the special tool and remove the six starter clutch outer socket bolts.

TOOL:

Flywheel holder	**07725-0040001**

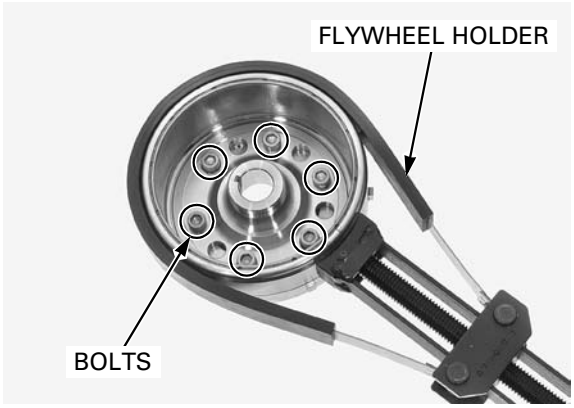

Remove the starter clutch outer and sprag clutch from the flywheel.

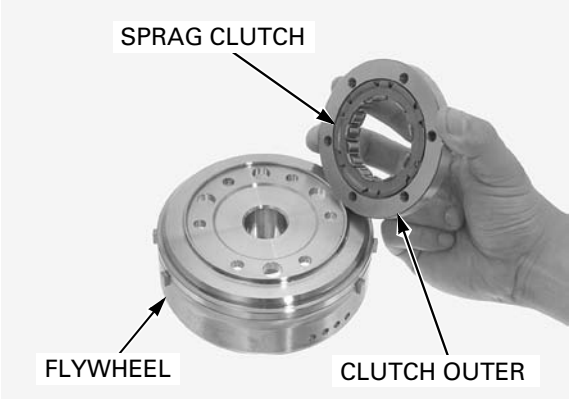

INSPECTION

Check the starter driven gear and reduction gear teeth for wear or damage.

Measure the starter driven gear bushing I.D.

SERVICE LIMIT: 25.100 mm (0.9882 in)

Measure the starter driven gear boss O.D.

SERVICE LIMIT: 45.615 mm (1.6778 in)

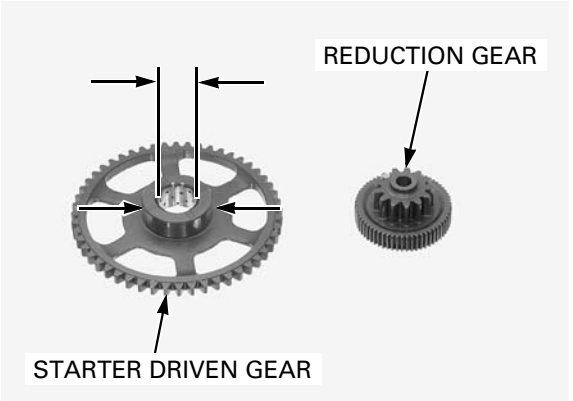

Check the starter clutch outer and sprag clutch for abnormal wear or damage.

Measure the starter clutch outer I.D.

SERVICE LIMIT: 62.395 mm (2.4565 in)

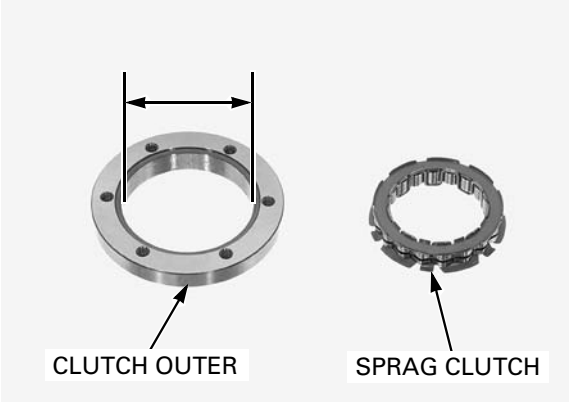

ASSEMBLY

Apply engine oil to the sprag clutch outer surface.

Install the sprag clutch into the starter clutch outer as shown.

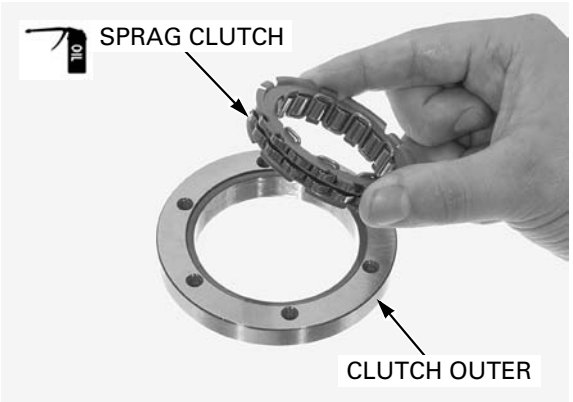

Install the starter clutch assembly onto the flywheel.

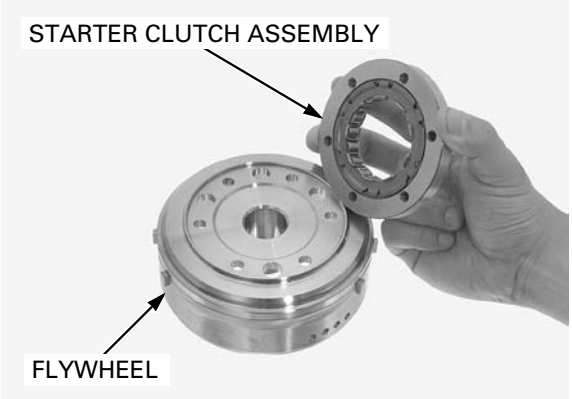

Clean the starter clutch socket bolt threads.
Apply locking agent to the socket bolt threads.

Align the bolt holes on the starter clutch outer and flywheel.
Install the socket bolts.
Hold the flywheel with the special tool and tighten the six starter clutch outer socket bolts to the specified torque.

TOOL:
Flywheel holder **07725-0040001**

TORQUE: 23 N·m (2.3 kgf·m, 17 lbf·ft)

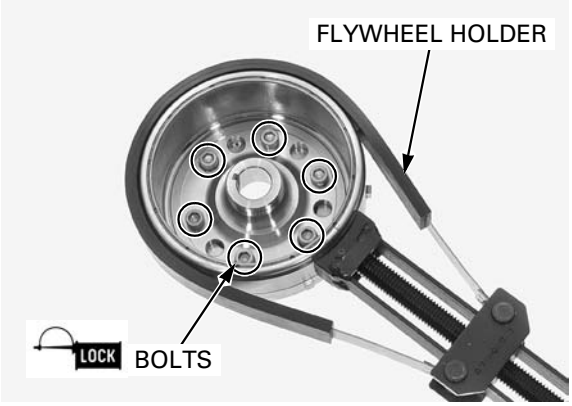

Apply molybdenum oil solution to the starter driven gear inner surface.
Apply engine oil to the starter driven gear boss outer surface and gear teeth.

Install the starter driven gear into the starter clutch on the flywheel while turning it clockwise.

Check that the starter driven gear turns clockwise smoothly and does not turn counterclockwise.

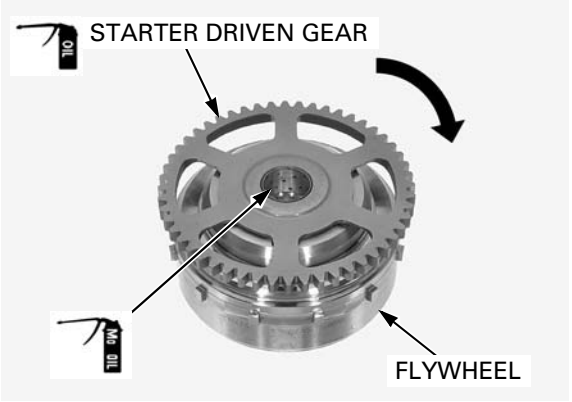

INSTALLATION

Install the woodruff key in the crankshaft key groove.

Apply molybdenum oil solution to the starter driven gear sliding surface of the crankshaft.

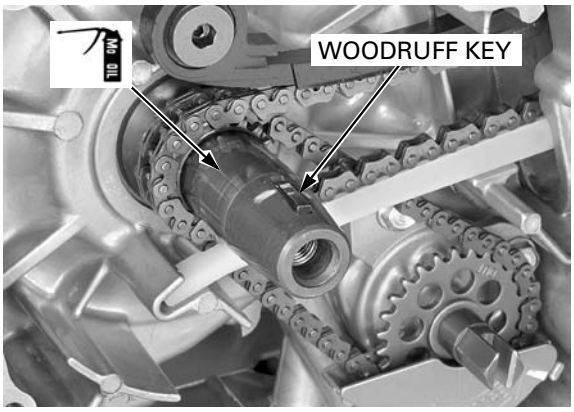

Apply engine oil to the starter reduction gear and shaft.

Set the starter reduction gear properly and insert the shaft.

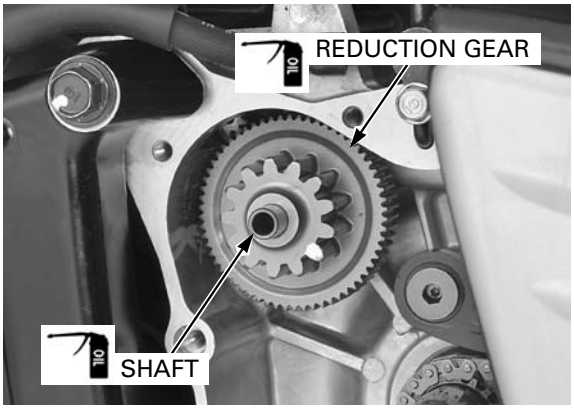

Clean any oil from the tapered portions of the crankshaft and flywheel.

Install the flywheel onto the crankshaft, aligning the groove with the woodruff key.

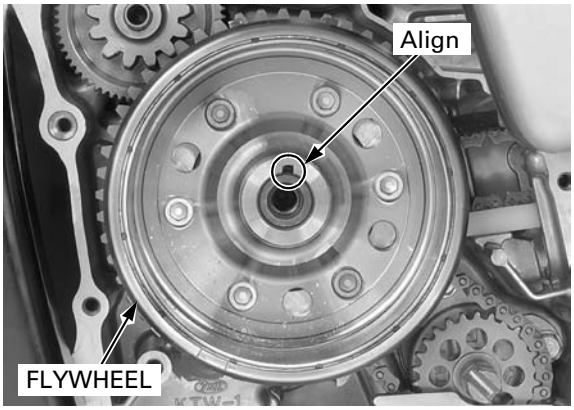

Apply engine oil to the flywheel bolt threads and seating surface.

Install the washer and nut.
Hold the flywheel with the special tool and tighten the bolt to the specified torque.

TOOL:
Flywheel holder **07725-0040001**

TORQUE: 103 N·m (10.5 kgf·m, 76 lbf·ft)

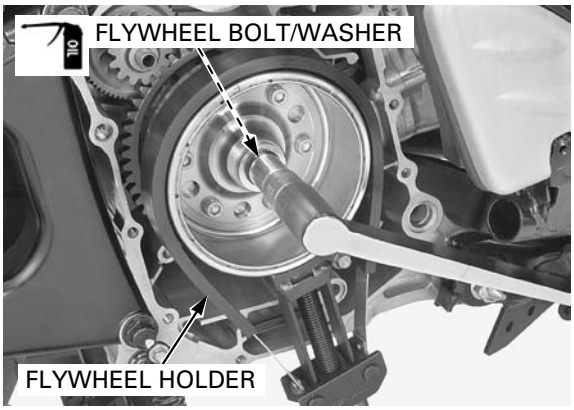

Clean the starter driven gear guide bolt threads.
Apply locking agent to the starter driven gear guide bolt threads (page 1-16).

Install the starter driven gear guide and tighten the bolt.

Install the right crankcase cover (page 13-5).

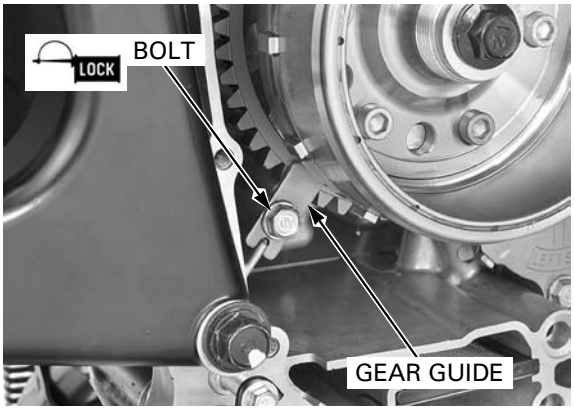

MEMO

14. CRANKCASE/CRANKSHAFT

COMPONENT LOCATION 14-2

SERVICE INFORMATION 14-3

TROUBLESHOOTING 14-4

CRANKCASE SEPARATION 14-5

CRANKSHAFT/CONNECTING ROD 14-6

CRANKPIN BEARING 14-8

MAIN JOURNAL BEARING 14-10

CRANKCASE ASSEMBLY 14-14

COMPONENT LOCATION

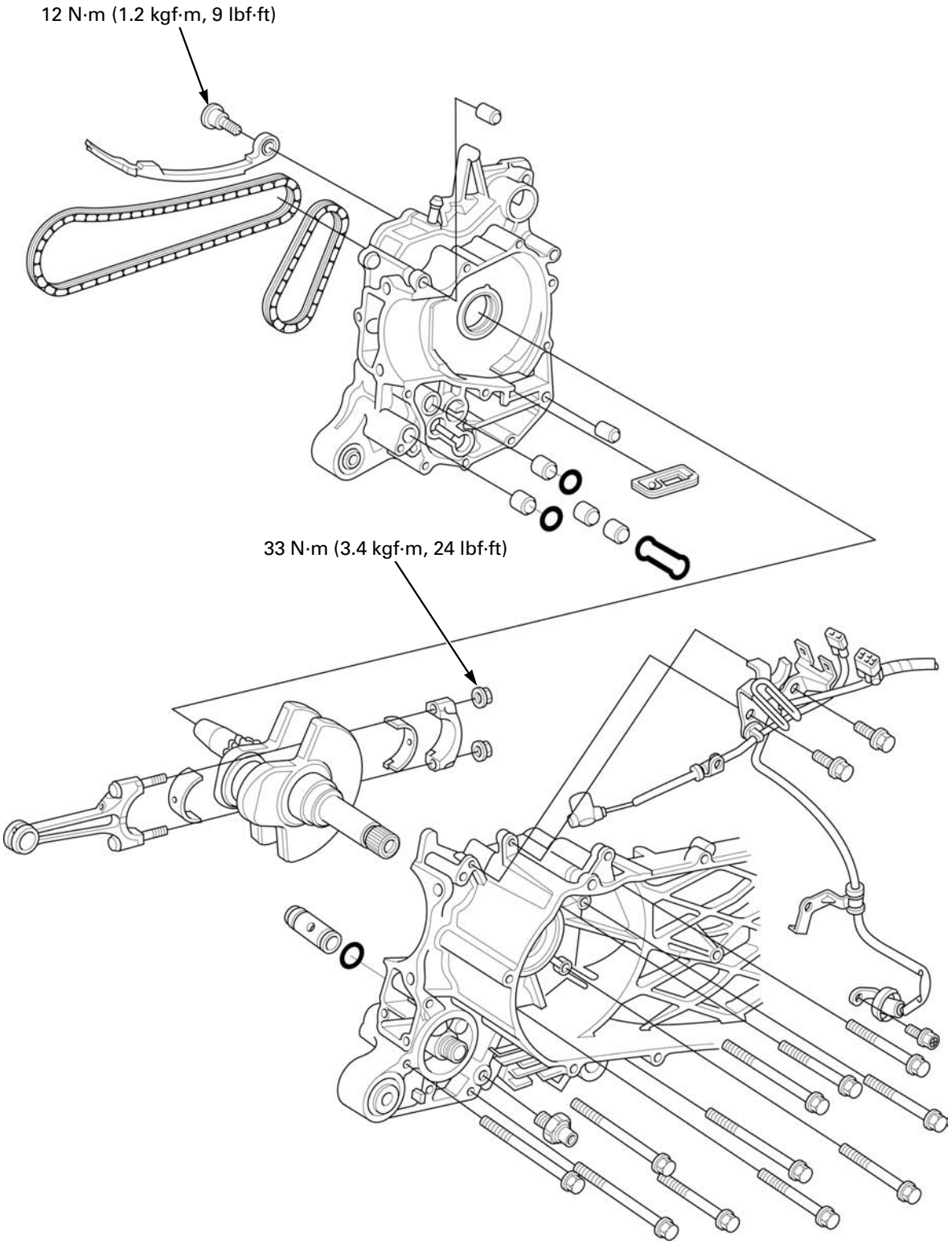

SERVICE INFORMATION

GENERAL

- This section covers the crankcase separation to service the crankshaft.
- The following parts must be removed before separating the crankcase.
  - engine (page 8-4)
  - cylinder head (page 9-11)
  - cylinder and piston (page 10-4)
  - centerstand (page 3-16)
  - starter motor (page 21-6)
  - flywheel (page 13-9)
  - oil pump (page 5-8)
  - oil filter (page 4-12)
  - oil pressure switch (page 5-5)
  - drive pulley (page 11-8)
  - clutch/driven pulley (page 11-11)
- In addition to the parts listed above, remove the final reduction (page 12-6) when the left crankcase half must be replaced.
- Be careful not to damage the crankcase mating surfaces when separating and assembling the crankcase halves.
- Clean all disassembled parts with clean solvent and dry them using compressed air before inspection.
- Prior to assembling the crankcase halves, apply sealant to their mating surfaces, Wipe off excess sealant thoroughly.

SPECIFICATIONS

Unit: mm (in)

ITEM		STANDARD	SERVICE LIMIT
Crankshaft	Connecting rod big end side clearance	0.15 – 0.30 (0.006 – 0.0012)	0.40 (0.016)
	Crankpin bearing oil clearance	0.030 – 0.052 (0.0012 – 0.0020)	0.07 (0.003)
	Main journal oil clearance	0.020 – 0.038 (0.0008 – 0.0015)	0.07 (0.003)
	Crankshaft runout	–	0.10 (0.004)
	Main journal O.D.	39.982 – 40.000 (1.5741 – 1.5748)	39.976 (1.5739)
Main journal I.D.		45.000 – 45.012 (1.7717 – 1.7721)	45.060 (1.7740)

TORQUE VALUES

Crank pin bearing cap nut	33 N·m (3.4 kgf·m, 24 lbf·ft)	Apply engine oil to the threads and flange surface
Cam chain tensioner pivot bolt	12 N·m (1.2 kgf·m, 9 lbf·ft)	

TOOLS

Driver, 40 x 42.7 mm 07965-VM00100 	Driver base, 48.4 x 56 mm 07946-KM90600 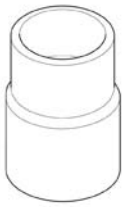	Metal installer set 070MF-KTWR100

TROUBLESHOOTING

Abnormal noise

- Worn crankshaft bearing
- Worn connecting rod big end bearing
- Worn connecting rod small end

CRANKCASE SEPARATION

Refer to Service Information (page 14-3) for removal of necessary parts before separating the crankcase.

Remove the cam chain and oil pump chain from the drive sprocket.

Remove the cam chain tensioner pivot bolt and tensioner slider from the crankcase.

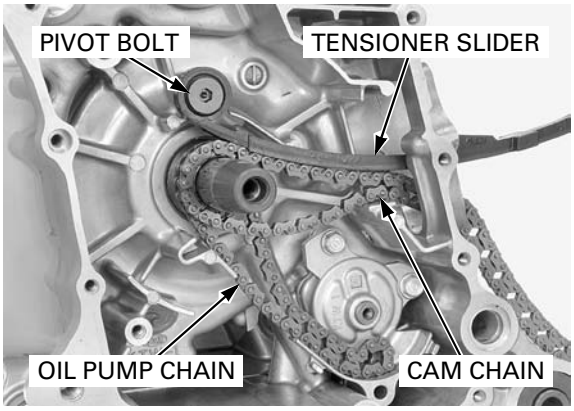

Loosen the crankcase bolts in a crisscross pattern in 2 or 3 steps and remove them.

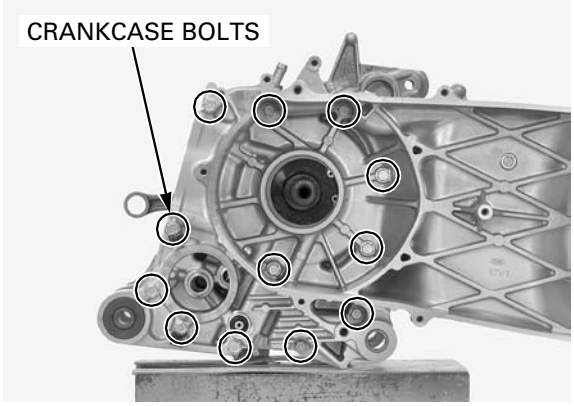

Place the crankcase with the left crankcase down and separate the right crankcase from the left crankcase.

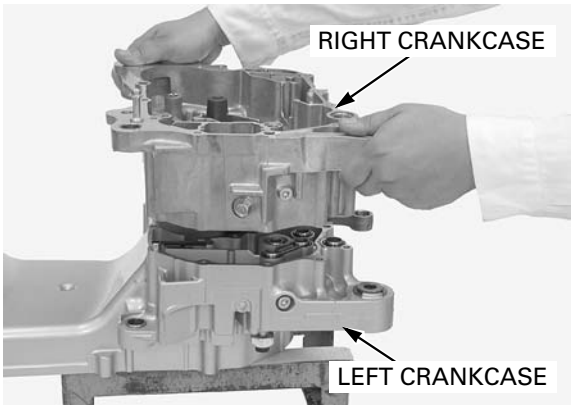

Remove the following:

– two dowel pins

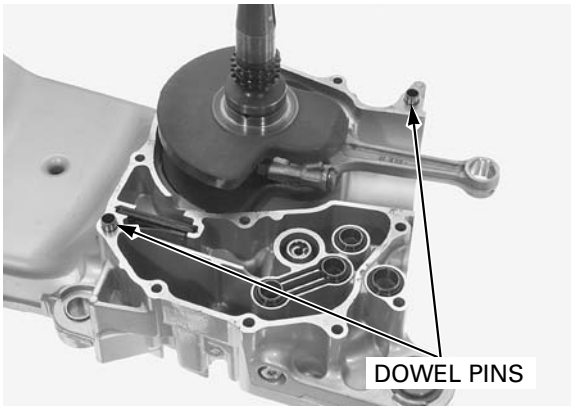

– water joint pin and O-ring
– three oil joint pins and O-rings
– reed valve

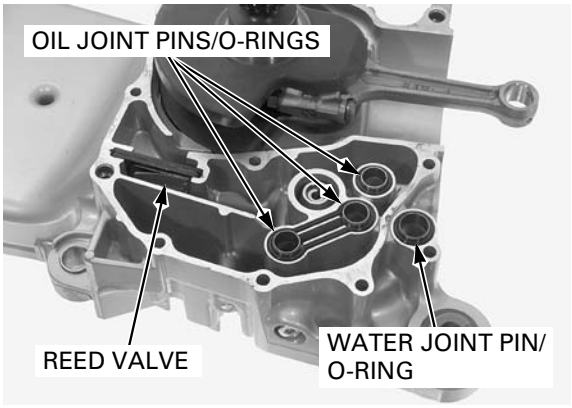

– crankshaft/connecting rod

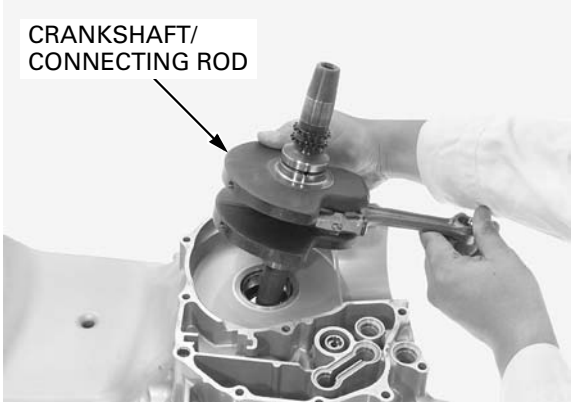

– snap ring
– oil seal

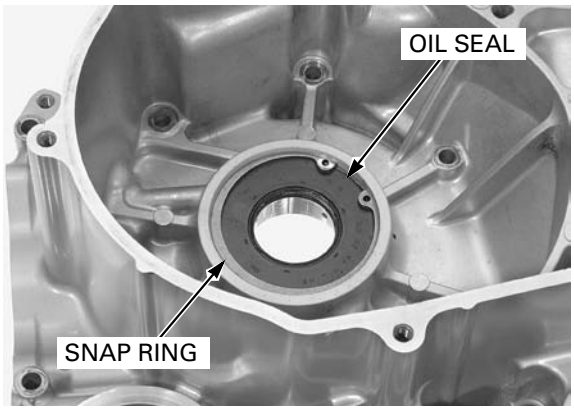

CRANKSHAFT/CONNECTING ROD

SIDE CLEARANCE INSPECTION

Remove the crankshaft/connecting rod (page 14-5).

Before removing the connecting rod, check the big end side clearance.
Measure the side clearance by inserting the feeler gauge between the crankshaft and connecting rod big end.

SERVICE LIMIT: 0.40 mm (0.016 in)

CONNECTING ROD REMOVAL

Tap the side of the cap lightly if bearing cap is hard to remove.
Be careful not to damage the main journal or crank pin bearing inserts.

Remove the crankpin bearing cap nuts, bearing cap and connecting rod from the crankshaft.

For the connecting rod small end inspection, refer to page 10-7.

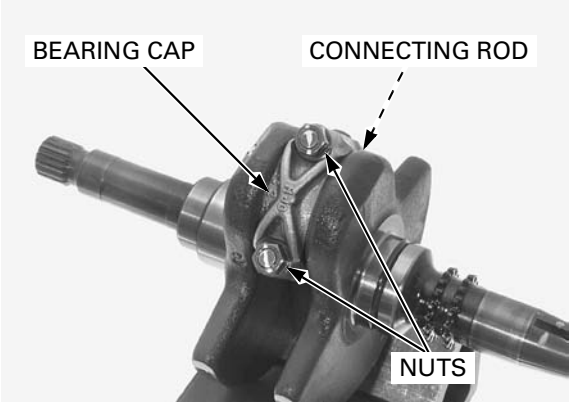

CRANKSHAFT RUNOUT INSPECTION

Check the crankshaft journal surfaces for damage, discoloration or scratch.

Set the crankshaft on a stand or V-blocks and measure the runout at points as shown using a dial indicator.

SERVICE LIMIT: 0.10 mm (0.004 in)

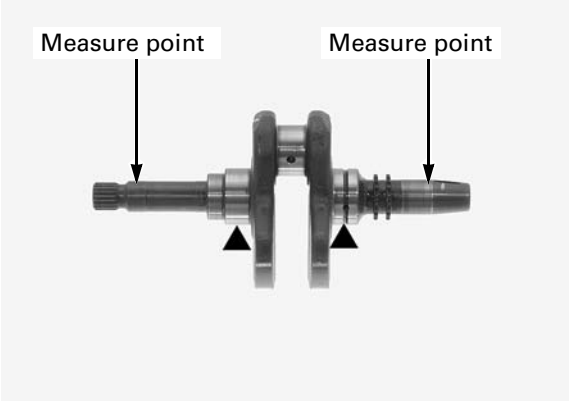

CONNECTING ROD INSTALLATION

Wipe any oil from the connecting rod, cap and bearing insert.
Install the bearing inserts on the connecting rod and cap by aligning the tab with the groove.

Apply molybdenum disulfide oil to the thrust surface of the bearings.

Install the connecting rod and cap on the crankshaft by aligning the I.D. code on the rod and cap.

- Face the oil jet to intake side of the engine.

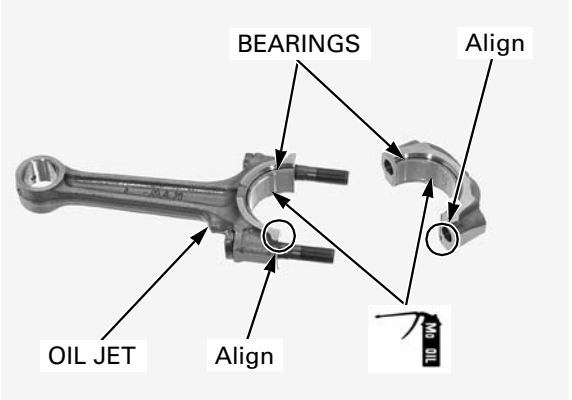

Apply engine oil to the bearing cap nut threads and seating surface, then tighten in several steps.

TORQUE: 33 N·m (3.4 kgf·m, 24 lbf·ft)

After tightening the nuts, check that the connecting rod move freely without binding.

Install the crankshaft/connecting rod (page 14-14).

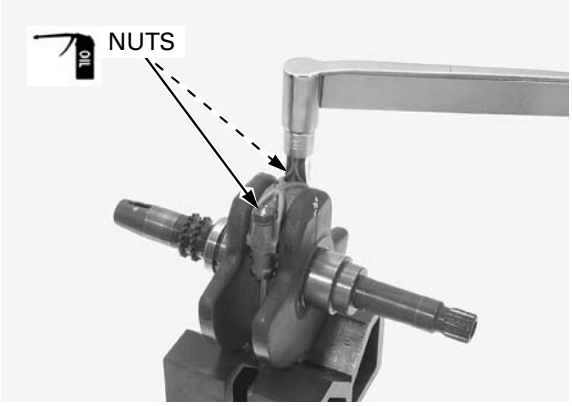

CRANKPIN BEARING

BEARING INSPECTION

Remove the connecting rod (page 14-7).
Check the bearing inserts for unusual wear, damage or peeling and replace them if necessary.

Select the replacement bearing (page 14-9).

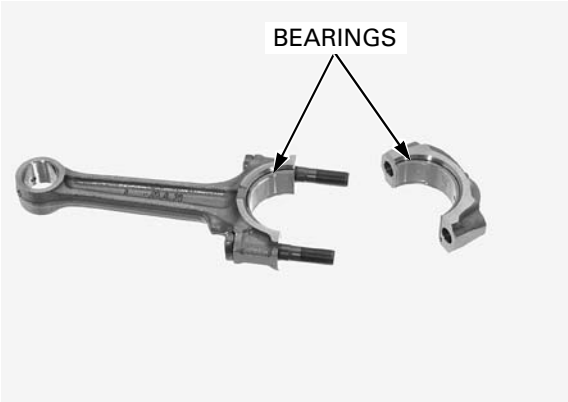

OIL CLEARANCE INSPECTION

Clean off any oil from the bearing insert and crankpin.

Put a strip of plastigauge lengthwise on crankpin avoiding the oil hole.

Carefully install the connecting rod and bearing cap on the crankpin.

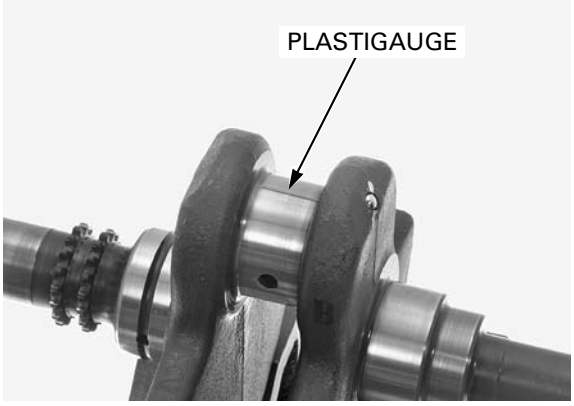

Do not rotate the crankshaft during inspection.

Apply engine oil to the threads and seating surfaces of the bearing cap nuts.
Install the nuts and tighten them evenly.

TORQUE: 33 N·m (3.4 kgf·m, 24 lbf·ft)

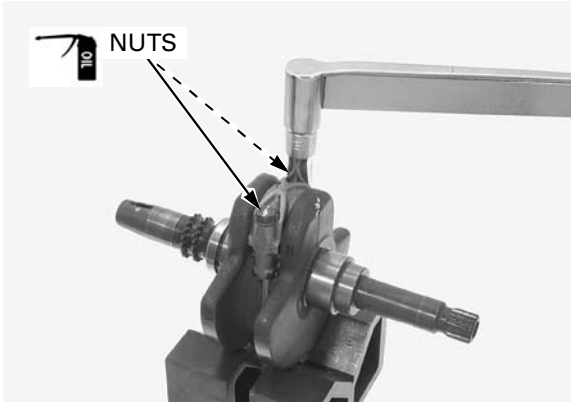

Remove the bearing cap and measure the compressed plastigauge at its widest point on crankpin to determine oil clearance.

SERVICE LIMIT: 0.07 mm (0.003 in)

If the clearance exceeds the service limit, select the correct replacement bearing as follows.

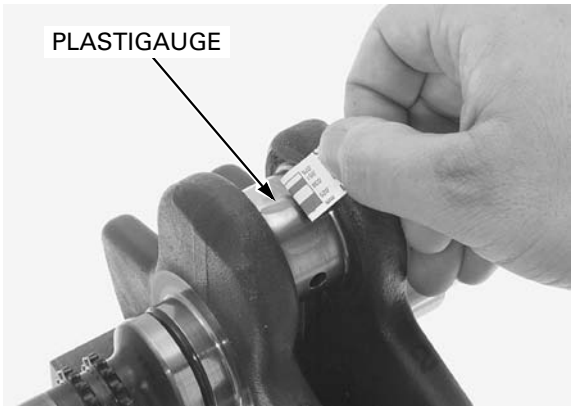

BEARING SELECTION

Record the connecting rod I.D. code number.

- Number 1, 2 or 3 on the connecting rod is the code for the connecting rod I.D.

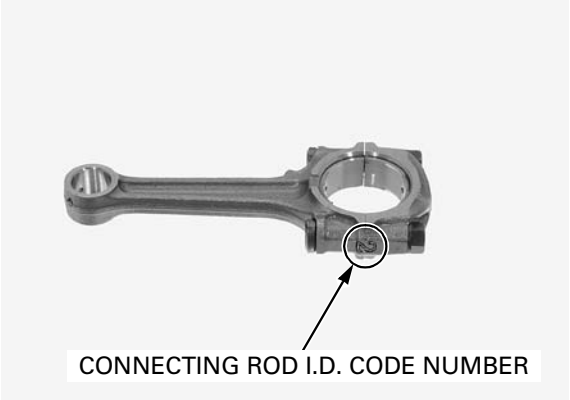

Record the crankpin O.D. code letter.

- Letter A, B or C on the crank weight is the code for the crankpin O.D.

Cross reference the connecting rod and crankpin code to determine the replacement bearing color code.

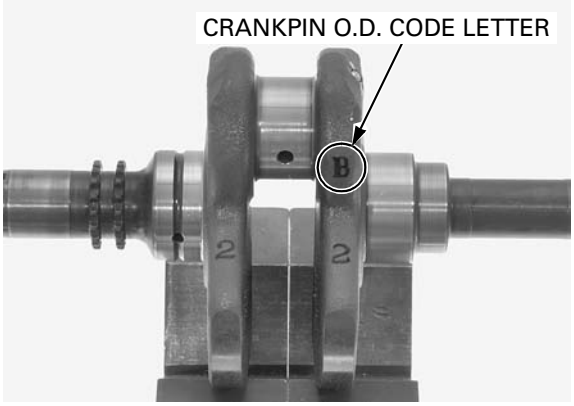

CRANKPIN BEARING SELECTION TABLE:

			CONNECTING ROD I.D. CODE		
			1	**2**	**3**
			39.000 – 39.006 mm (1.5354 – 1.5357 in)	**39.006 – 39.012 mm (1.5357 – 1.5359 in)**	**39.012 – 39.018 mm (1.5357 – 1.5361 in)**
CRANKPIN O.D. CODE	A	36.000 – 35.994 mm (1.4173 – 1.4171 in)	E (Yellow)	D (Green)	C (Brown)
	B	35.994 – 35.988 mm (1.4171 – 1.4168 in)	D (Green)	C (Brown)	B (Black)
	C	35.988 – 35.982 mm (1.4168 – 1.4166 in)	C (Brown)	B (Black)	A (Blue)

BEARING THICKNESS:

A (Blue): Thick
B (Black): ↕
C (Brown): Middle
D (Green): ↕
E (Yellow): Thin

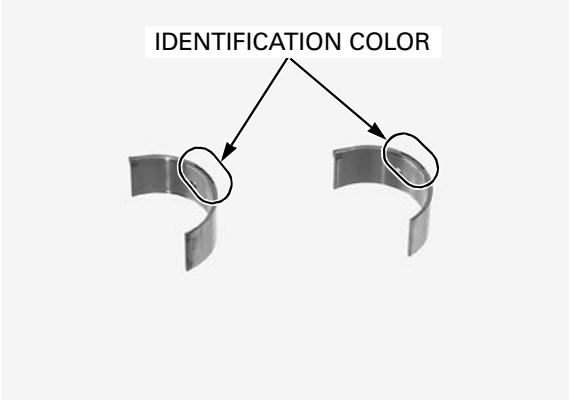

NOTICE

After selecting new bearings, recheck the clearance with a plastigauge. Incorrect clearance can cause severe engine damage.

MAIN JOURNAL BEARING

BEARING INSPECTION

Remove the crankshaft (page 14-5).
Clean off any oil from the bearings.

Check the bearings for unusual wear, damage or peeling and replace them if necessary.

Measure the main journal bearing I.D. at between the bearing groove and crankcase outer side end of the bearing, and 90 degrees to the index mark.

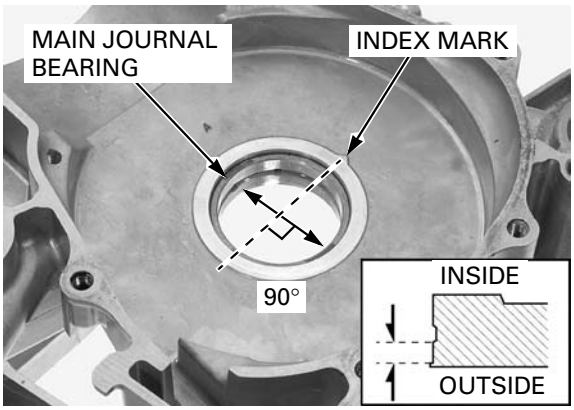

Clean off any oil from the crankshaft journals.

Measure and record the crankshaft main journal O.D.

SERVICE LIMIT: 39.976 mm (1.5739 in)

Calculate the main journal oil clearance.

SERVICE LIMIT: 0.07 mm (0.003 in)

If the clearance exceeds the service limit, select the bearing.

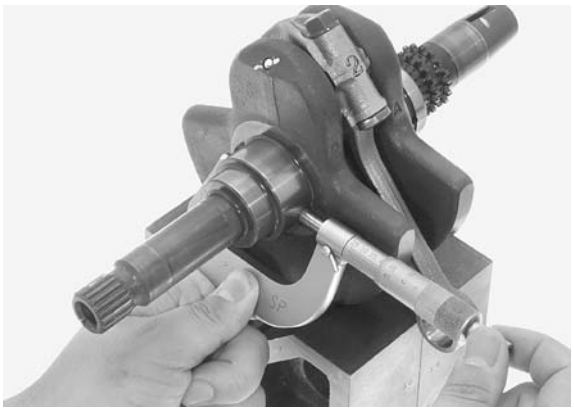

BEARING SELECTION

Set a special tool and hydraulic press on the outside of the crankcase.

TOOLS:

Driver, 40 x 42.7 mm	**07965-VM00100**
Driver base, 48.4 x 56 mm	**07946-KM90600**

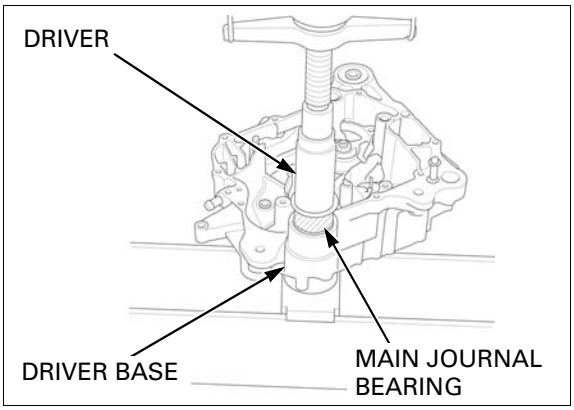

Press the main journal bearings toward the outside of the crankcase.

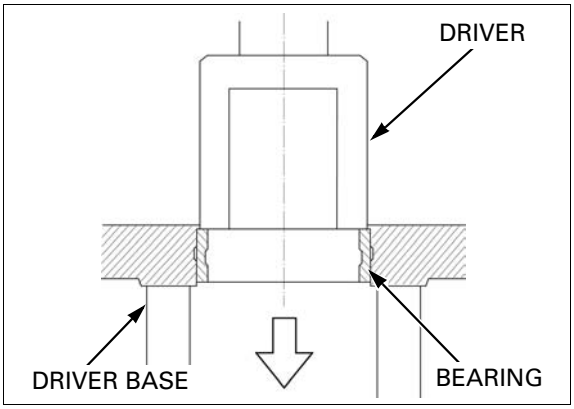

Measure and record the crankcase main journal I.D. at between the main journal groove and crankcase outer side end, and 90 degrees to the index mark.

SERVICE LIMIT: 45.060 mm (1.7740 in)

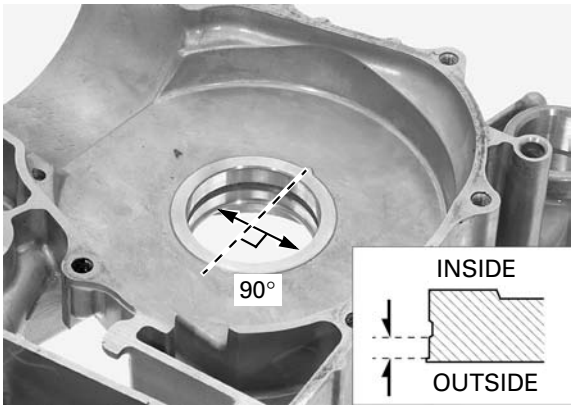

Depending upon the results of the above measurements there are four possible scenarios for main bearing selection:

- Crankshaft and crankcase are replaced
- Crankcase only is replaced
- Crankshaft only is replaced
- Main bearings only are replaced

Carefully refer to the following instructions and tables for main bearing selection.

Record the bearing support I.D. code letter.

- Letters A or B on each crankcase is the code for the crankcase I.D.

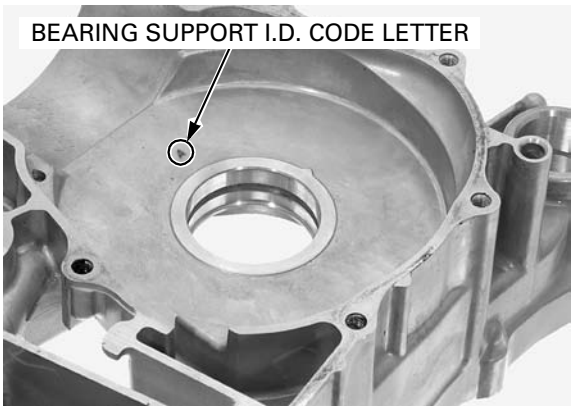

Record the main journal O.D. code number.

- Letters 1, 2 or 3 on each crank weight is the code for crankshaft journal O.D.

Cross-reference the crankshaft and crankcase codes to determine the replacement bearing color.

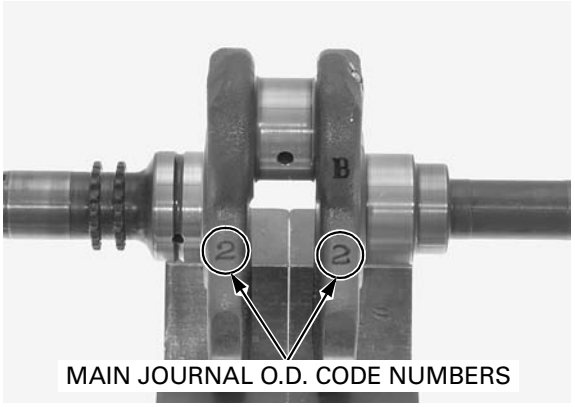

In case the crankshaft and crankcase are replaced:

			MAIN JOURNAL O.D. CODE		
			1	2	3
			39.994 – 40.000 mm (1.5746 – 1.5748 in)	39.988 – 39.994 mm (1.5743 – 1.5746 in)	39.982 – 39.988 mm (1.5741 – 1.5743 in)
BEARING SUPPORT I.D. CODE	A	45.000 – 45.006 mm (1.7717 – 1.7719 in)	D (Green)	C (Brown)	B (Black)
	B	45.006 – 45.012 mm (1.7719 – 1.7721 in)	C (Brown)	B (Black)	A (Blue)

In case the crankcase only is replaced:

			MAIN JOURNAL O.D.			
			39.994 – 40.000 mm (1.5746 – 1.5748 in)	39.988 – 39.994 mm (1.5743 – 1.5746 in)	39.982 – 39.988 mm (1.5741 – 1.5743 in)	39.976 – 39.982 mm (1.5739 – 1.5741 in)
BEARING SUPPORT I.D. CODE	A	45.000 – 45.006 mm (1.7717 – 1.7719 in)	D (Green)	C (Brown)	B (Black)	A (Blue)
	B	45.006 – 45.012 mm (1.7719 – 1.7721 in)	C (Brown)	B (Black)	A (Blue)	A (Blue)

In case the crankshaft only is replaced:

		MAIN JOURNAL O.D. CODE		
		1	2	3
		39.994 – 40.000 mm (1.5746 – 1.5748 in)	39.988 – 39.994 mm (1.5743 – 1.5746 in)	39.982 – 39.988 mm (1.5741 – 1.5743 in)
BEARING SUPPORT I.D.	45.000 – 45.006 mm (1.7717 – 1.7719 in)	D (Green)	C (Brown)	B (Black)
	45.006 – 45.012 mm (1.7719 – 1.7721 in)	C (Brown)	B (Black)	A (Blue)
	45.012 – 45.024 mm (1.7721 – 1.7726 in)	B (Black)	A (Blue)	A (Blue)
	45.024 – 45.036 mm (1.7726 – 1.7731 in)	A (Blue)	O.S. H (Green-Green)	O.S. H (Green-Green)
	45.036 – 45.048 mm (1.7731 – 1.7735 in)	O.S. H (Green-Green)	O.S. G (Brown-Brown)	O.S. G (Brown-Brown)
	45.048 – 45.060 mm (1.7735 – 1.7740 in)	O.S. G (Brown-Brown)	O.S. F (Black-Black)	O.S. F (Black-Black)

In case of main bearing replacement only:

		MAIN JOURNAL O.D.			
		39.994 – 40.000 mm (1.5746 – 1.5748 in)	39.988 – 39.994 mm (1.5743 – 1.5746 in)	39.982 – 39.988 mm (1.5741 – 1.5743 in)	39.976 – 39.982 mm (1.5739 – 1.5741 in)
BEARING SUPPORT I.D.	45.000 – 45.006 mm (1.7717 – 1.7719 in)	D (Green)	C (Brown)	B (Black)	A (Blue)
	45.006 – 45.012 mm (1.7719 – 1.7721 in)	C (Brown)	B (Black)	A (Blue)	A (Blue)
	45.012 – 45.024 mm (1.7721 – 1.7726 in)	B (Black)	A (Blue)	A (Blue)	O.S. H (Green-Green)
	45.024 – 45.036 mm (1.7726 – 1.7731 in)	A (Blue)	O.S. H (Green-Green)	O.S. H (Green-Green)	O.S. G (Brown-Brown)
	45.036 – 45.048 mm (1.7731 – 1.7735 in)	O.S. H (Green-Green)	O.S. G (Brown-Brown)	O.S. G (Brown-Brown)	O.S. F (Black-Black)
	45.048 – 45.060 mm (1.7735 – 1.7740 in)	O.S. G (Brown-Brown)	O.S. F (Black-Black)	O.S. F (Black-Black)	O.S. E (Blue-Blue)

BEARING THICKNESS:

O.S. E (Blue-Blue):	**Thick**
O.S. F (Black-Black):	
O.S. G (Brown-Brown):	↑
O.S. H (Green-Green):	**Middle**
A (Blue):	
B (Black):	↓
C (Brown):	
D (Green):	**Thin**

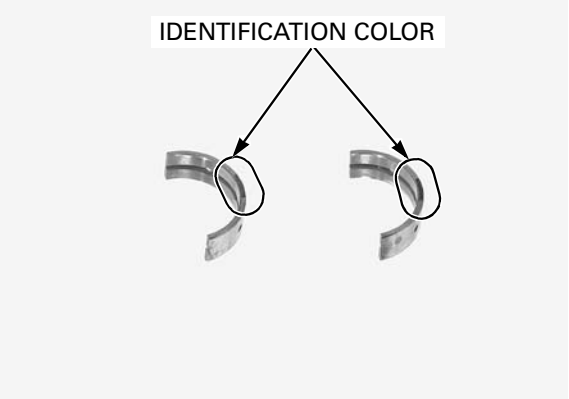

BEARING INSTALLATION

Set a new bearing onto the metal installer so that the clearance between the end of the tool and bearing is about 1.0 mm (0.04 in) on the inserting side.

TOOL:
Metal installer set **070MF-KTWR100**

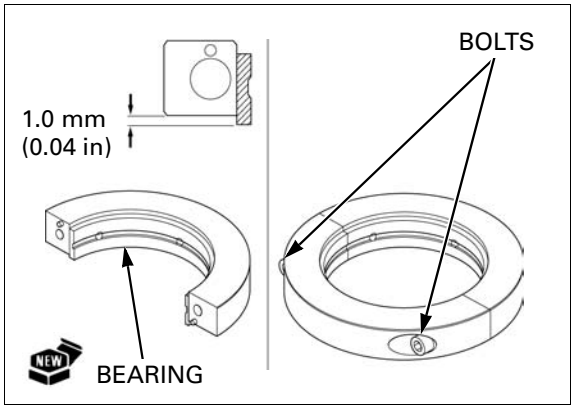

Set the bearings and special tools assembly on inside of the crankcase, fitting the bearing edge in the crankcase main journal.
Align the mating line of the bearings with the index mark on the crankcase as shown.

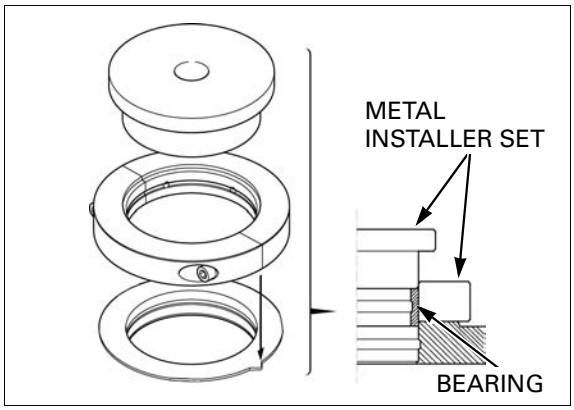

Set the hydraulic press.

TOOLS:

Metal installer set	**070MF-KTWR100**
Driver base, 48.4 x 56 mm	**07946-KM90600**

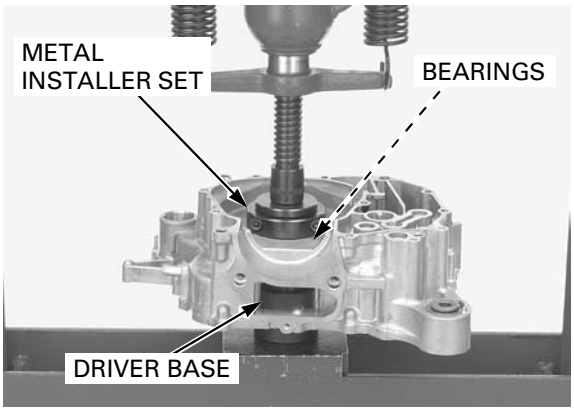

Press the new bearings until the metal installer flange fully seat.

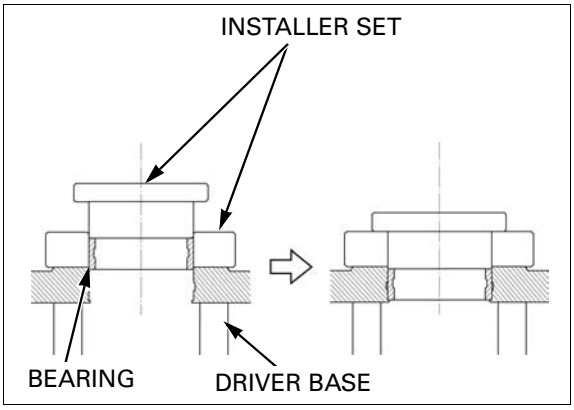

Make sure the bearing mating line aligns with the index mark on the crankcase.

Check the oil clearance (page 14-8).

- After selecting new bearings, recheck the clearance. Incorrect clearance can cause severe engine damage.

Install the crankshaft (page 14-14).

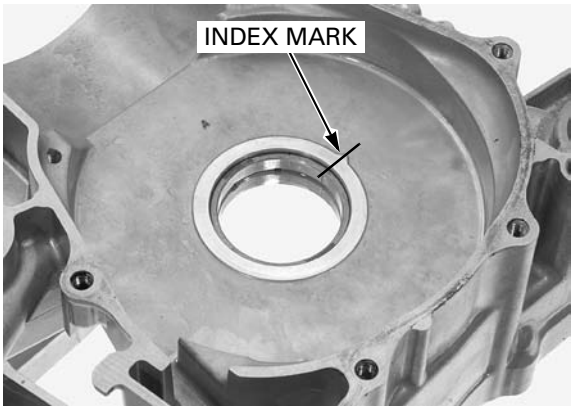

CRANKCASE ASSEMBLY

Clean the insides and mating surface of the crankcases.
Check for cracks or other damage.
Dress any roughness or irregularities with an oil stone.

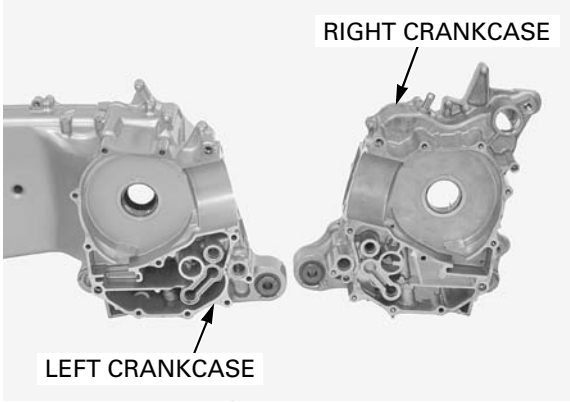

Apply engine oil to a new oil seal lip and outer surface.

Install the oil seal until it is fully seated with the left crankcase.

Install the snap ring into the groove in the left crankcase securely.

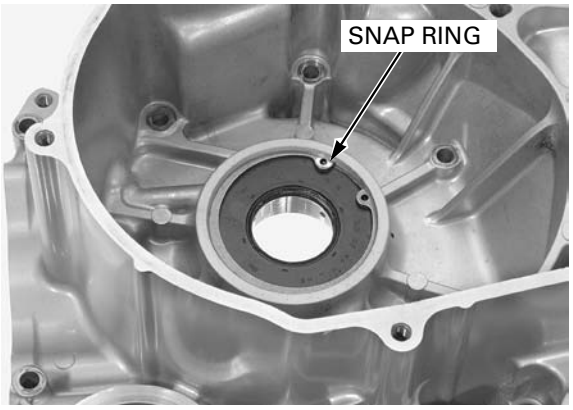

Apply molybdenum disulfide oil to the main journal bearing inserts and install the crankshaft/connecting rod into the left crankcase.

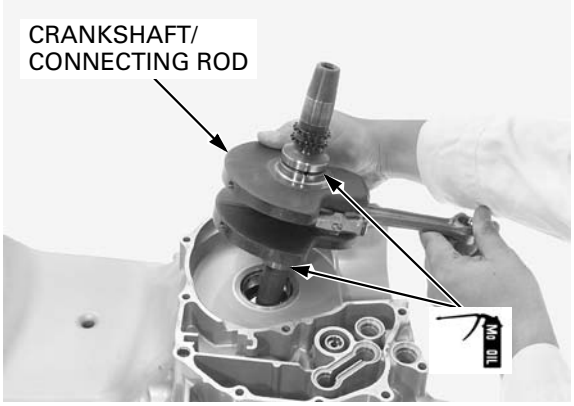

Install the reed valve of the left crankcase as shown.

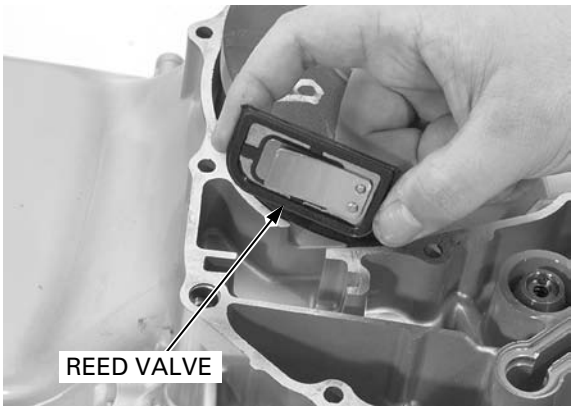

Install the water joint pin and new O-ring.

Install the three oil joint pins and new O-rings.

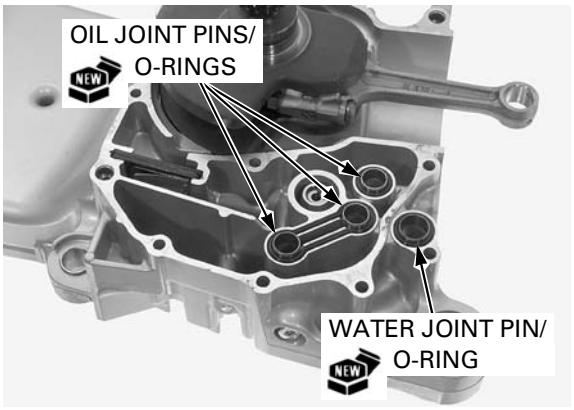

Install the two dowel pins.

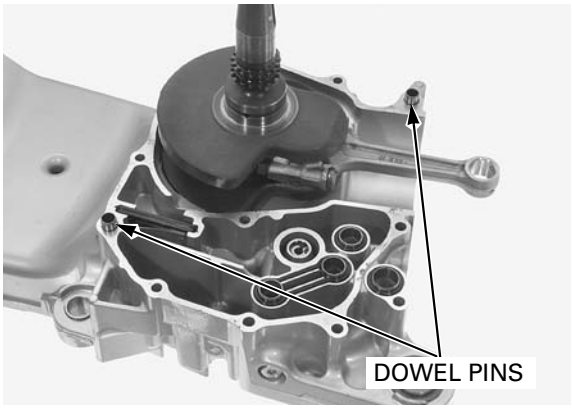

Apply sealant (Three Bond 1207B or equivalent) to the right crankcase mating surface.

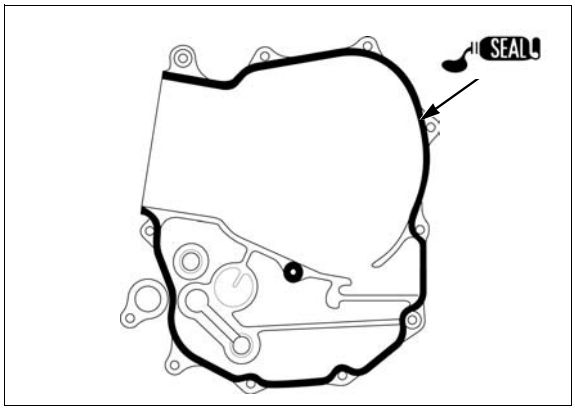

Install the right crankcase over the left crankcase.

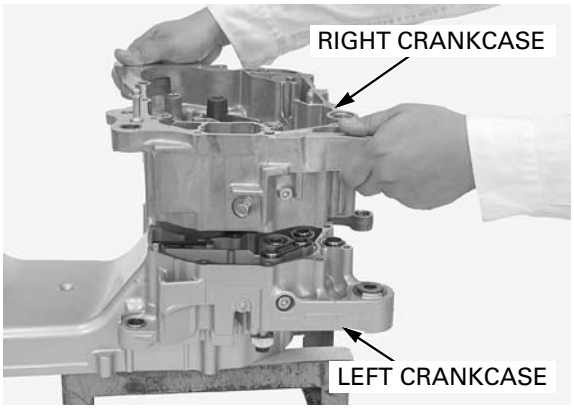

Install the crankcase bolts and tighten them in a crisscross pattern in 2 or 3 steps.

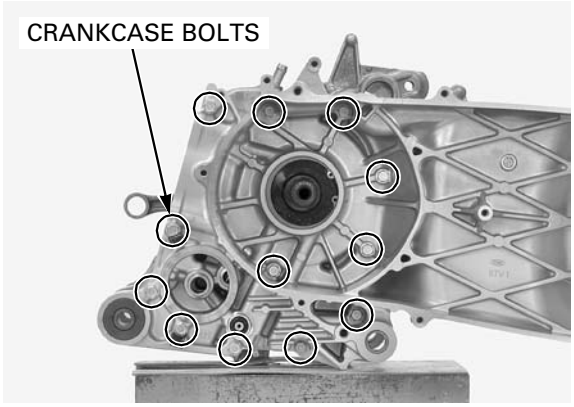

Install the cam chain tensioner slider and tighten the pivot bolt to the specified torque.

TORQUE: 12 N·m (1.2 kgf·m, 9 lbf·ft)

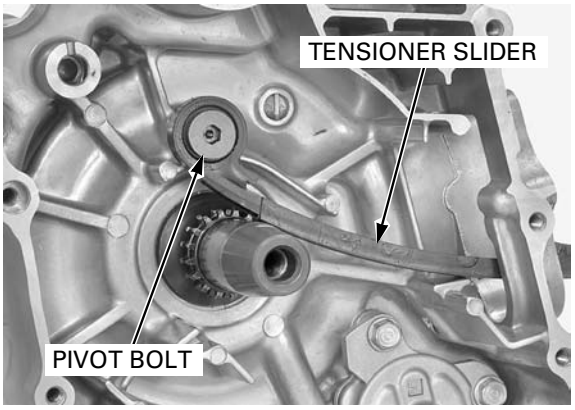

Apply engine oil to the timing sprocket teeth, cam chain and oil pump chain then install the cam chain and oil pump chain onto the timing sprocket.

Install the removed parts in the reverse order of removal.

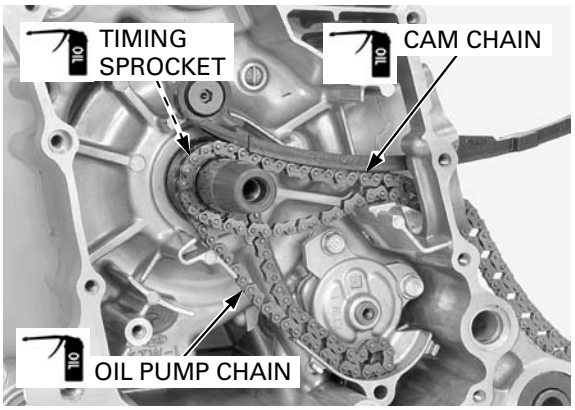

MEMO

15. FRONT WHEEL/SUSPENSION/STEERING

COMPONENT LOCATION 15-2

SERVICE INFORMATION 15-3

TROUBLESHOOTING 15-5

FRONT WHEEL 15-6

FORK 15-12

HANDLEBAR 15-20

STEERING STEM 15-27

COMPONENT LOCATION

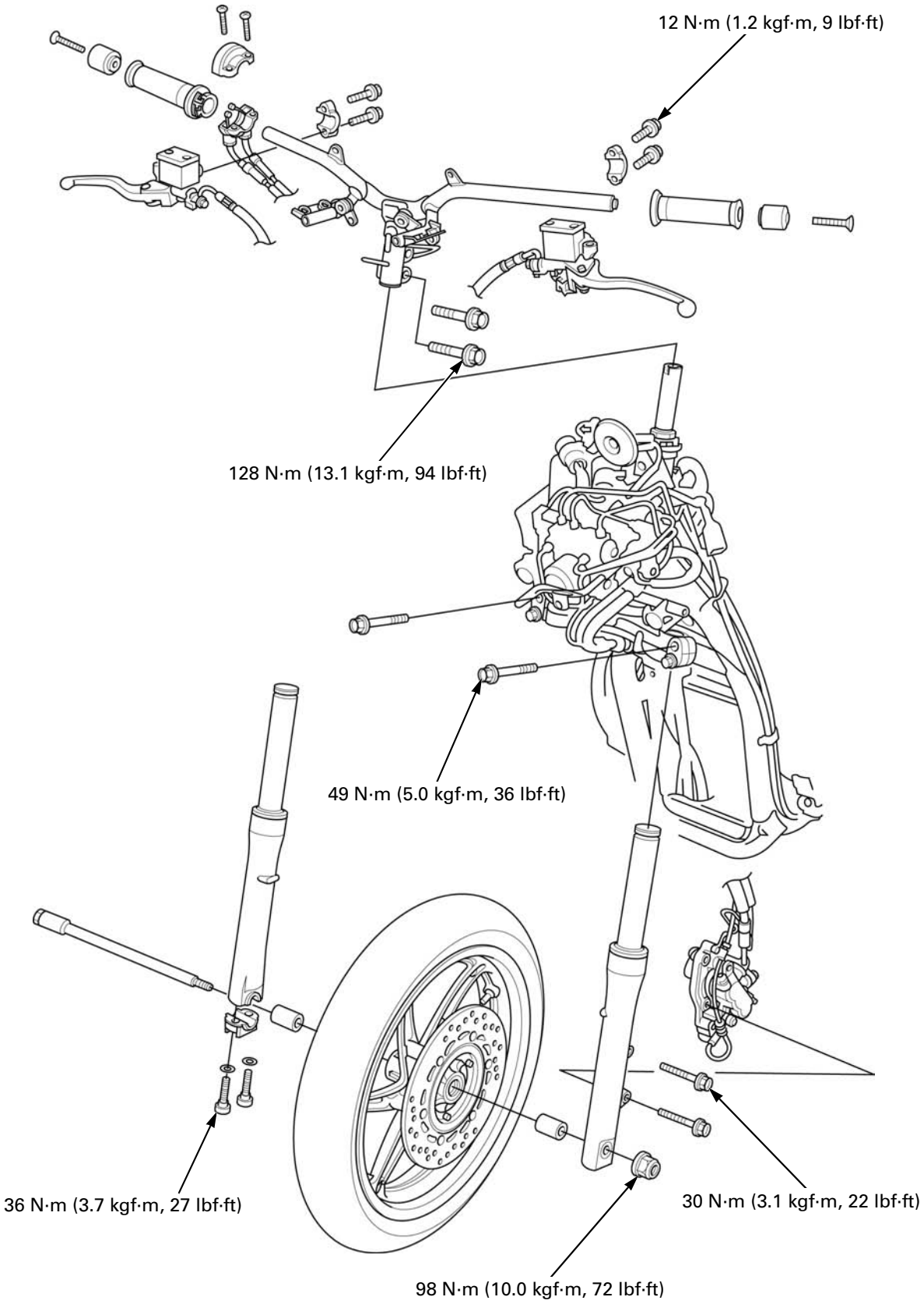

SERVICE INFORMATION

GENERAL

- Raise the front wheel off the ground by supporting the frame securely when servicing the front wheel, suspension and steering stem. A hoist or equivalent is required to support the scooter.
- A contaminated brake disc or pad reduces stopping power. Discard contaminated pads and clean a contaminated disc with a high quality brake degreasing agent.
- After installing the front wheel, check the brake operation by applying the brake lever.
- Use only tires marked "TUBELESS" and tubeless valves on rim marked "TUBELESS TIRE APPLICABLE".
- When using the pin spanner, use a 25 cm (10 in) long deflecting beam type torque wrench. The pin spanner increases the torque wrench's leverage, so the torque wrench reading will be less than the torque actually applied to the steering stem adjusting nut. The specification given on this page is actual torque applied to the steering stem adjusting nut, not the reading on the torque wrench when used with the pin spanner. The procedure later in the text gives the actual and indicated torque.
- For brake system service (page 17-4).
- For handlebar switch inspection (page 22-18).

SPECIFICATIONS

Unit: mm (in)

ITEM		STANDARD	SERVICE LIMIT
Minimum tire tread depth		–	1.5 (0.06)
Cold tire pressure	Driver only	200 kPa (2.00 kgf/cm^2, 28 psi)	–
	Driver and passenger	200 kPa (2.00 kgf/cm^2, 28 psi)	–
Axle runout		–	0.2 (0.01)
Wheel rim runout	Radial	–	2.0 (0.08)
	Axial	–	2.0 (0.08)
Wheel balance weight		–	70 g (2.5 oz) maximum
Fork	Spring free length	263.5 (10.37)	257.5 (10.14)
	Pipe runout	–	0.2 (0.01)
	Recommended fork fluid	Honda Ultra Cushion Oil 10W or equivalent	–
	Fluid level	90 (3.5)	–
	Fluid capacity	151 ± 2.5 cm^3 (5.1 ± 0.08 US oz, 5.3 ± 0.09 Imp oz)	–

TORQUE VALUES

Steering stem lock nut	68 N·m (6.9 kgf·m, 50 lbf·ft)	
Steering stem adjusting nut	–	See page 15-30
Steering stem pinch bolt	49 N·m (5.0 kgf·m, 36 lbf·ft)	
Fork socket bolt	20 N·m (2.0 kgf·m, 15 lbf·ft)	Apply locking agent to the threads.
Handlebar post bolt	128 N·m (13.1 kgf·m, 94 lbf·ft)	ALOC bolt: replace with a new one.
Master cylinder holder bolt	12 N·m (1.2 kgf·m, 9 lbf·ft)	
Front brake disc socket bolt	42 N·m (4.3 kgf·m, 31 lbf·ft)	ALOC bolt: replace with a new one.
Front pulser ring torx bolt (ABS type only)	8 N·m (0.8 kgf·m, 5.9 lbf·ft)	ALOC bolt: replace with a new one.
Front axle nut	98 N·m (10.0 kgf·m, 72 lbf·ft)	U-nut.
Front axle holder socket bolt (right side only)	36 N·m (3.7 kgf·m, 27 lbf·ft)	ALOC bolt: replace with a new one.
Caliper mounting bolt	30 N·m (3.1 kgf·m, 22 lbf·ft)	ALOC bolt: replace with a new one.

TOOLS

Bearing remover shaft 07746-0050100 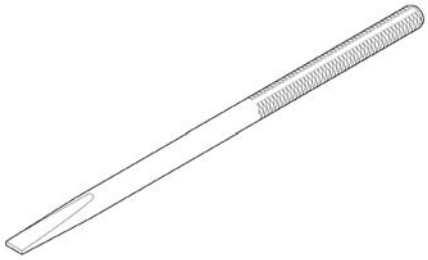	Bearing remover head, 15 mm 07746-0050400 	Driver 07749-0010000 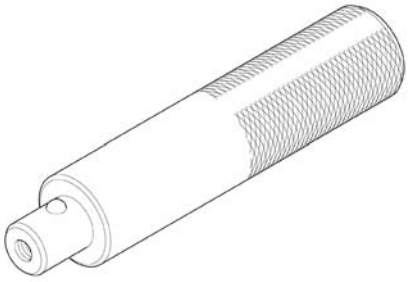
Attachment, 42 x 47 mm 07746-0010300 	Attachment, 52 x 55 mm 07746-0010400 	Pilot, 15 mm 07746-0040300
Fork seal driver weight 07747-0010100 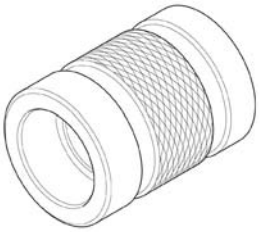	Fork seal driver attachment, 37.2 mm I.D. 07747-0010600 	Socket wrench 07916-KM10000 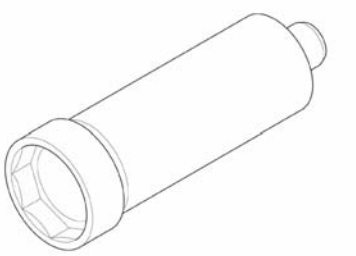
Pin spanner 07702-0020001 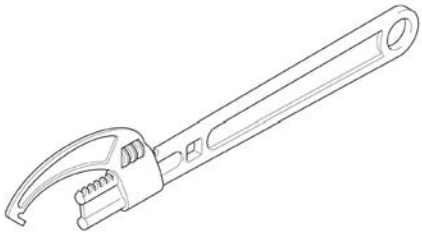	Adjustable bearing remover 07YAC-0010102 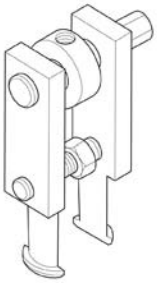	Bearing remover shaft 07JAC-PH80200 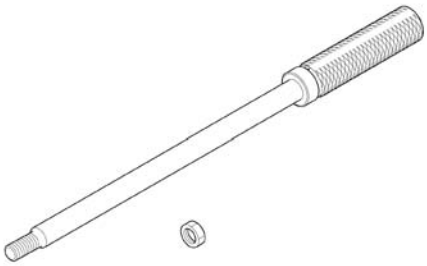

Remover weight 07741-0010201 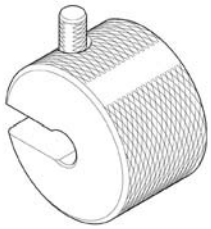	Attachment, 35 mm I.D. 07746-0030400

TROUBLESHOOTING

Hard steering
- Insufficient tire pressure
- Faulty tire
- Steering stem adjusting nut too tight
- Worn or damaged steering head bearings
- Worn or damaged steering head bearing races
- Bent steering stem

Steers to one side or does not track straight
- Bent front axle
- Faulty tire
- Wheel installed incorrectly
- Worn or damaged wheel bearings
- Unbalanced fork fluid level
- Bent fork leg
- Damaged or loose steering head bearings
- Damaged frame
- Worn or damaged engine mounting bushings (page 8-4)

Front wheel wobbles
- Bent rim
- Worn or damaged wheel bearings
- Axle fastener not tightened properly
- Unbalanced tire and wheel
- Faulty tire

Wheel turns hard
- Faulty wheel bearings
- Bent axle
- Front brake drag (page 17-6)

Soft suspension
- Low tire pressure
- Weak fork spring
- Low fluid level in fork
- Incorrect fluid weight (low viscosity)

Stiff suspension
- High tire pressure
- Bent fork pipe
- Bottom case binds
- High fluid level in fork
- Incorrect fluid weight (high viscosity)
- Clogged fork fluid passage

Suspension noise
- Loose fork fasteners
- Incorrect fluid weight (low viscosity)
- Worn guide bushing or fork pipe bushing

FRONT WHEEL

REMOVAL

Remove the axle nut and loosen the axle holder socket bolts.

Support the scooter securely using a hoist or equivalent and raise the front wheel off the ground.

Do not operate the brake levers after removing the wheel. To do so will cause difficulty in fitting the brake disc between the brake pads.

Pull the axle out and remove the front wheel.

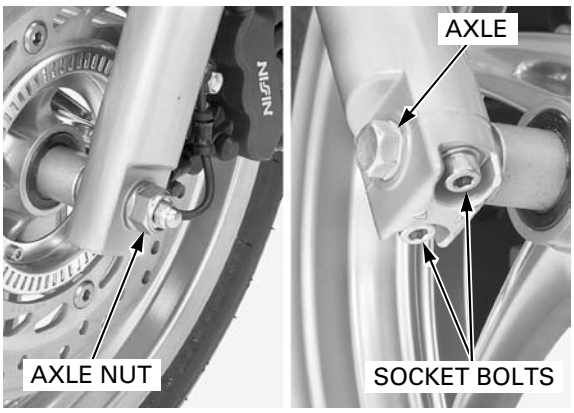

Right fork only: Remove the axle holder socket bolts, washers and axle holder.

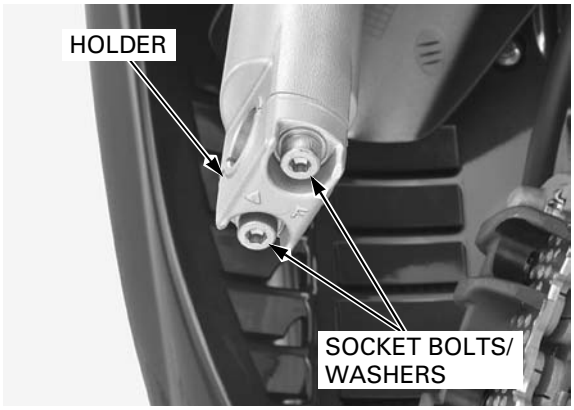

Remove the right and left side collars from the wheel hub.

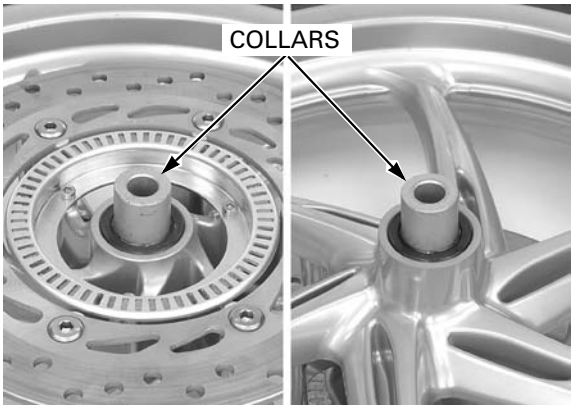

INSPECTION

AXLE

Set the axle in V-blocks.
Turn the axle and measure the runout using a dial indicator.
Actual runout is 1/2 the total indicator reading.

SERVICE LIMIT: 0.2 mm (0.01 in)

WHEEL

Check the rim runout by placing the wheel in a truing stand.
Spin the wheel slowly and read the runout using a dial indicator.
Actual runout is 1/2 the total indicator reading.

SERVICE LIMITS:
Radial: 2.0 mm (0.08 in)
Axial: 2.0 mm (0.08 in)

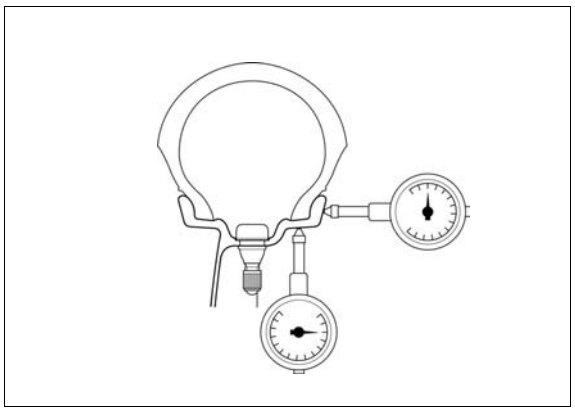

WHEEL BEARING

Turn the inner race of each bearing with your finger. The bearings should turn smoothly and quietly.
Also check that the bearing outer race fits tightly in the hub.

Replace the wheel bearings in pairs.

Remove and discard the bearings if the races do not turn smoothly, quietly, or if they fit loosely in the hub.

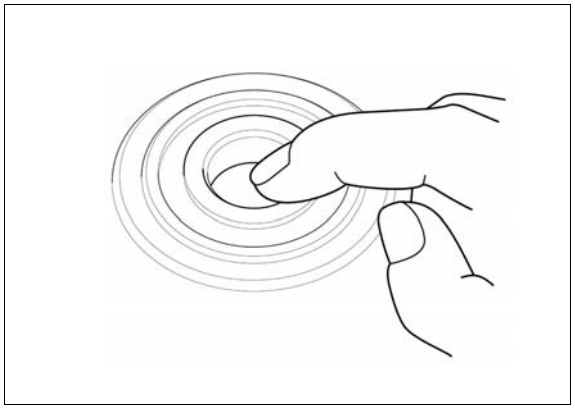

Carefully check balance before installing the wheel.

WHEEL BALANCE

- Mount the tire with the arrow mark facing in the direction of rotation.
- For optimum balance, the tire balance mark (light mass point: a paint dot on the side wall) must be located next to the valve stem. Remount the tire if necessary.
- The wheel balance must be checked when the tire is remounted.

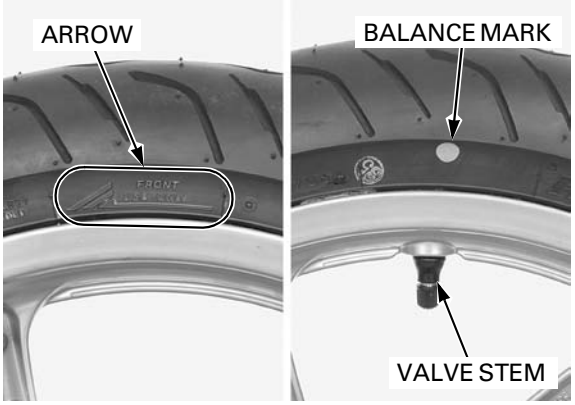

Mount the wheel, tire and brake disc assembly on an inspection stand.
Spin the wheel, allow it to stop, and mark the lowest (heaviest) part of the wheel with chalk.
Do this two or three times to verify the heaviest area.
If the wheel is balanced, it will not stop consistently in the same position.

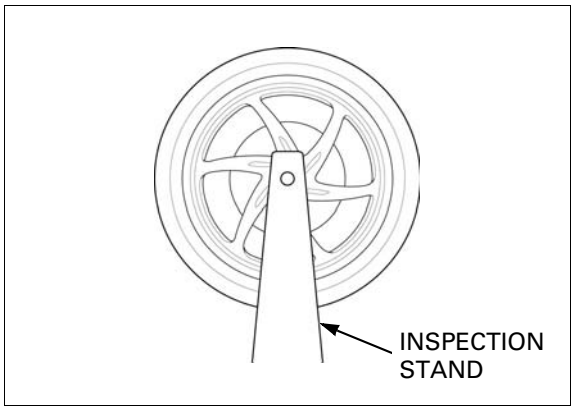

To balance the wheel, install a balance weight on the lightest side of the rim, on the side opposite the chalk marks. Add just enough weight so the wheel will no longer stop in the same position when it is spun.
Do not add more than 70 g (2.5 oz) to the wheel.

DISASSEMBLY

Remove the following:

ABS type only. Do not reuse the torx bolts.

- three torx bolts
- pulser ring

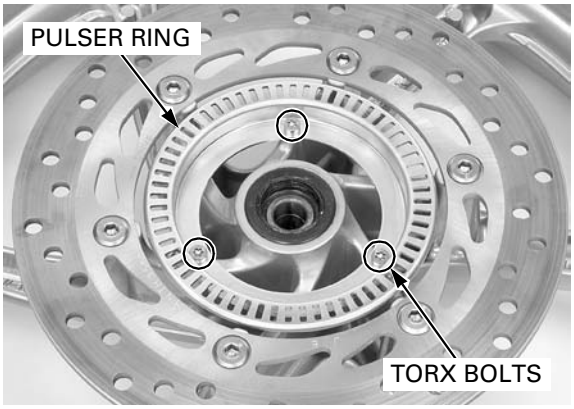

Do not reuse the socket bolts.

- six socket bolts
- brake disc

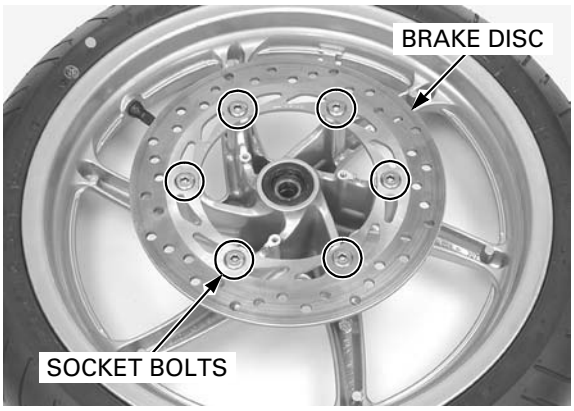

- right side dust seal
- left side dust seal

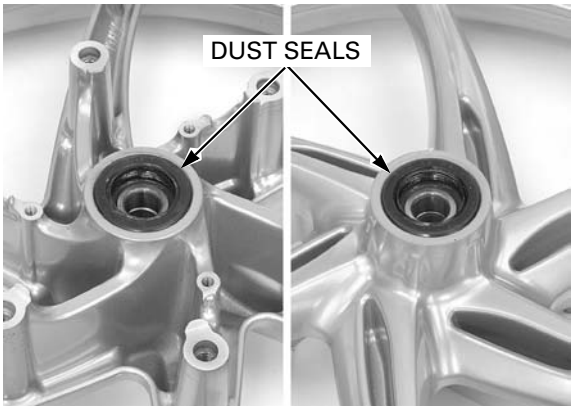

Replace the wheel bearings in pairs. Do not reuse old bearing.

Install the remover head into the bearing.
From the opposite side of the wheel, install the bearing remover shaft and drive the bearing out of the wheel hub.

TOOLS:

Bearing remover shaft	**07746-0050100**
Bearing remover head, 15 mm	**07746-0050400**

Remove the distance collar and drive out the other bearing.

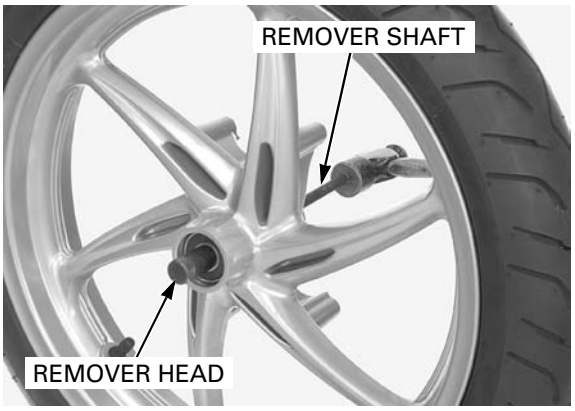

ASSEMBLY

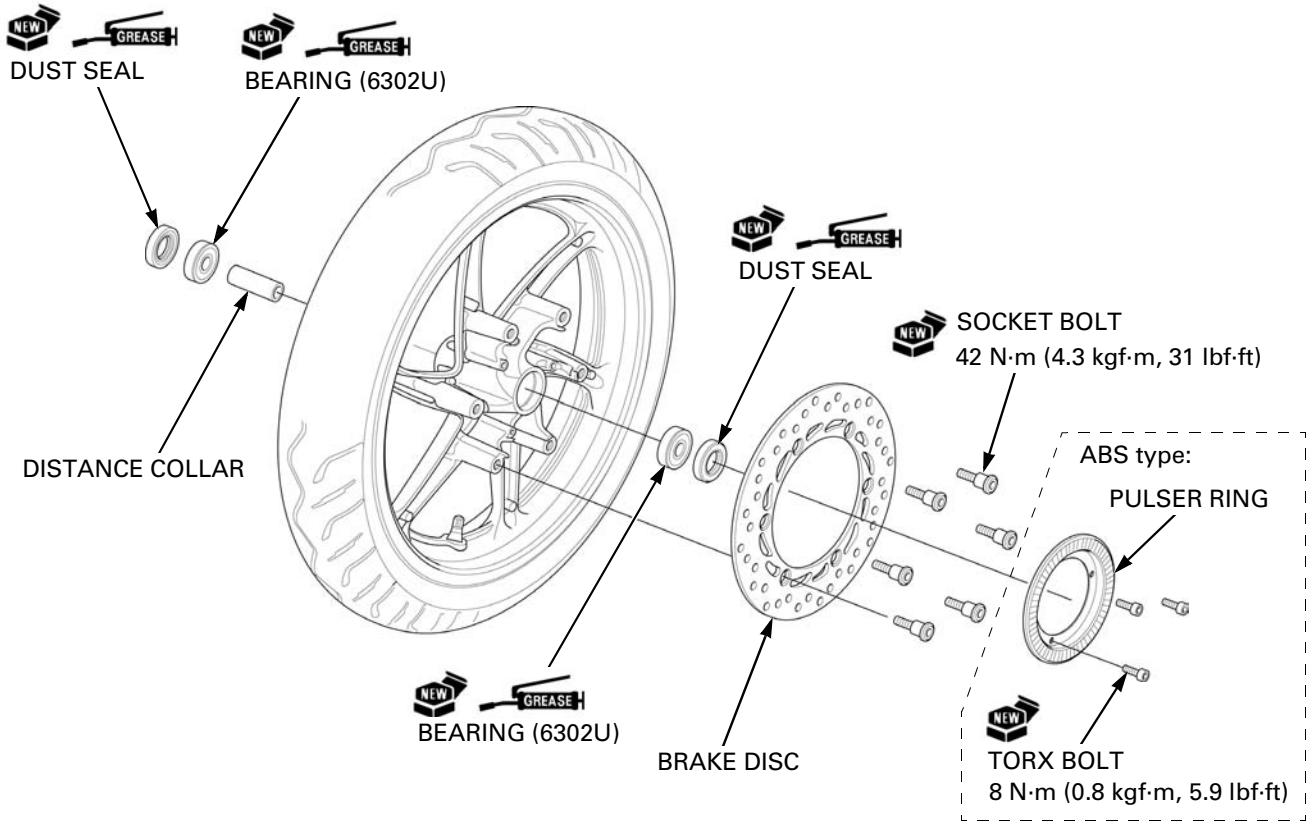

Pack the cavity in bearing with grease.

Drive in a new left side bearing (brake disc side) squarely with the sealed side facing up until it is fully seated.

Install the distance collar.
Drive in a new right side bearing squarely with the sealed side facing up until it is fully seated.

TOOLS:

Driver	**07749-0010000**
Attachment, 42 x 47 mm	**07746-0010300**
Pilot, 15 mm	**07746-0040300**

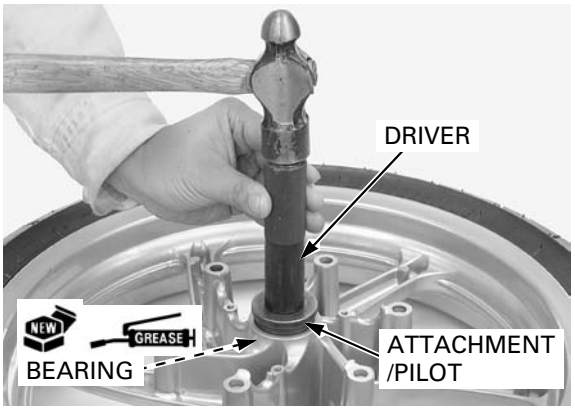

Apply grease to a new dust seal lips and install the dust seals until it is flush with the hub.

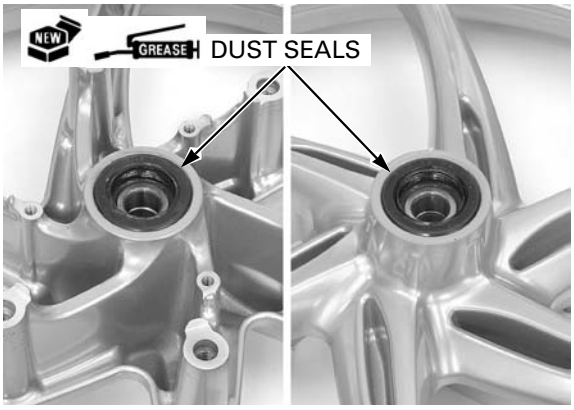

Do not get grease on the brake disc or stopping power will be reduced.

Install the brake disc on the wheel hub with the marked side facing out.
Install new socket bolts and tighten them in a criss-cross pattern in several steps.

TORQUE: 42 N·m (4.3 kgf·m, 31 lbf·ft)

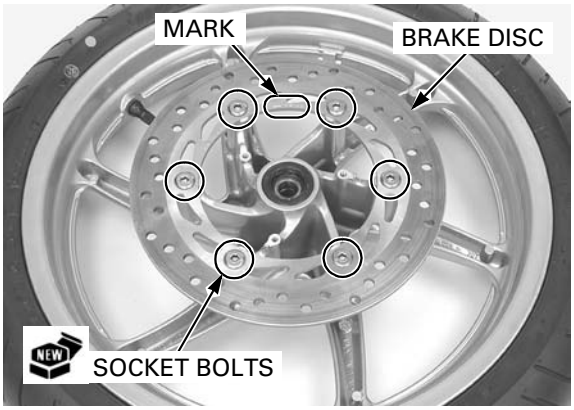

ABS type only.

Install the front pulser ring on the left wheel hub.
Install and tighten new torx bolts to the specified torque.

TORQUE: 8 N·m (0.8 kgf·m, 5.9 lbf·ft)

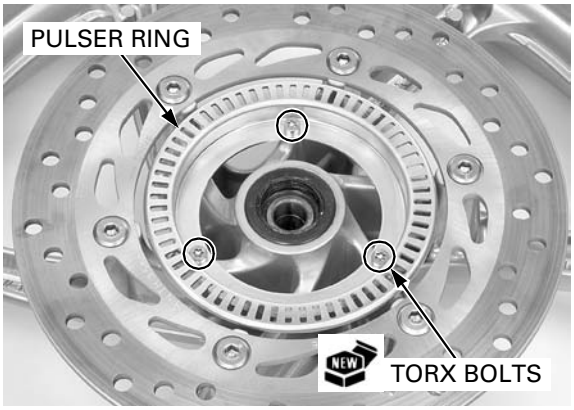

INSTALLATION

Install the right and left side collars.

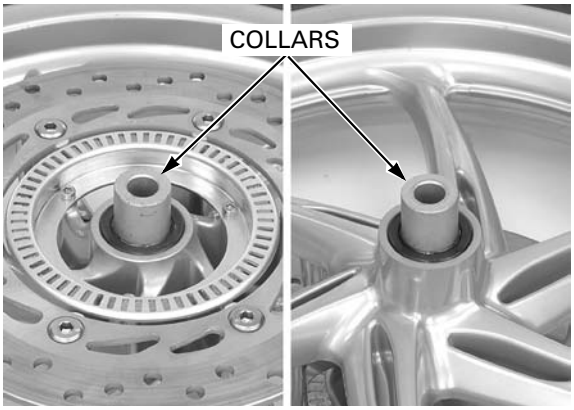

Right fork only:

Set the axle holder with the "F" mark facing forward and temporarily install the new axle holder socket bolts and washers.

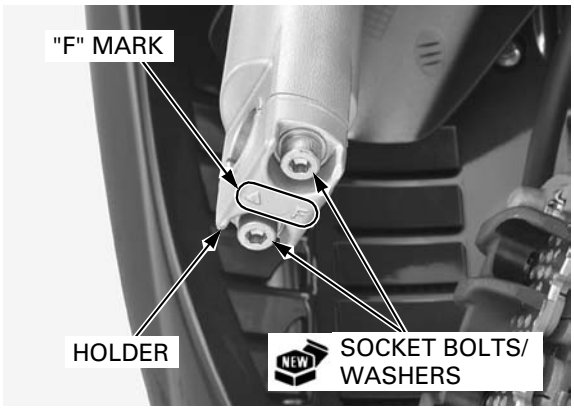

Be careful not to damage the brake pads.

Install the front wheel between the fork legs while inserting the brake disc between the pads in caliper.

Install the front axle from the right side.

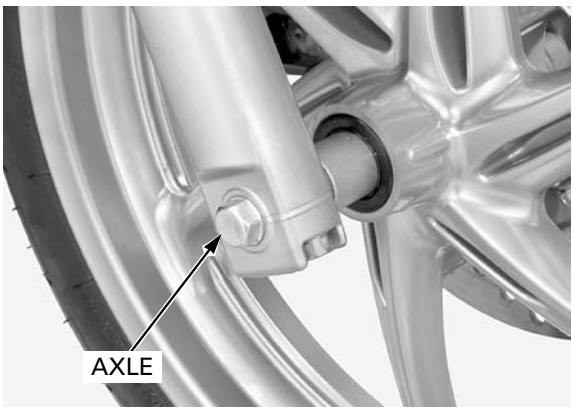

Hold the axle and tighten the axle nut to the specified torque.

TORQUE: 98 N·m (10.0 kgf·m, 72 lbf·ft)

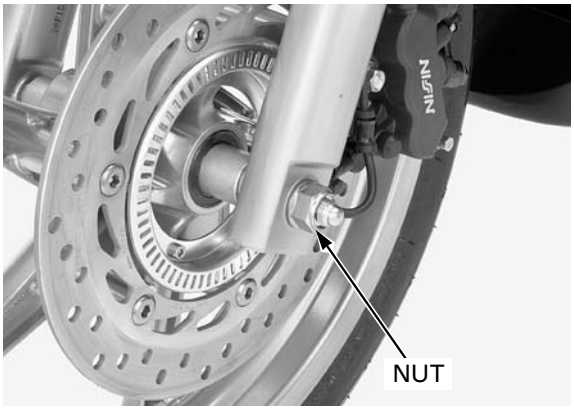

With the front brake applied, pump the forks up and down several times to seat the axle and check brake operation.

Tighten the front side axle holder socket bolt, then tighten the rear side axle holder socket bolt to the specified torque.

TORQUE: 36 N·m (3.7 kgf·m, 27 lbf·ft)

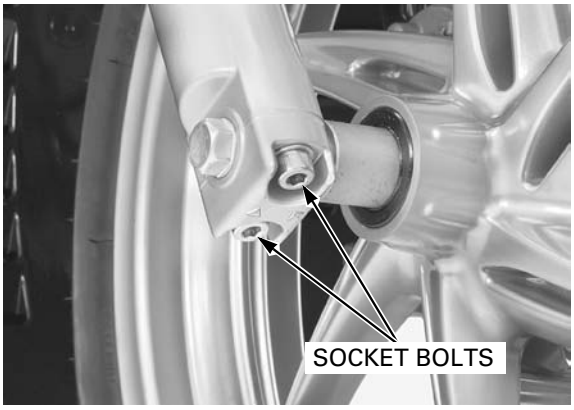

ABS type only.

Measure the clearance (air gap) between the sensor and pulser ring at several points by turning the wheel slowly.
It must be within specification.

STANDARD: 0.2 – 1.2 mm (0.01 – 0.05 in)

The sensor air gap cannot be adjusted.
If it is not within specification, check each installation part for deformation, looseness and damage.

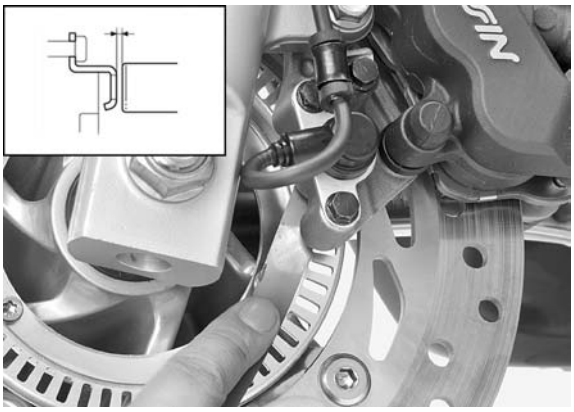

FORK

REMOVAL

Support the brake caliper so it does not hang from the brake hose. Do not twist the brake hose.

Remove the following:

- front wheel (page 15-6)
- front fender (page 3-8)

Remove the following from left fork:

- two mounting bolts
- brake caliper

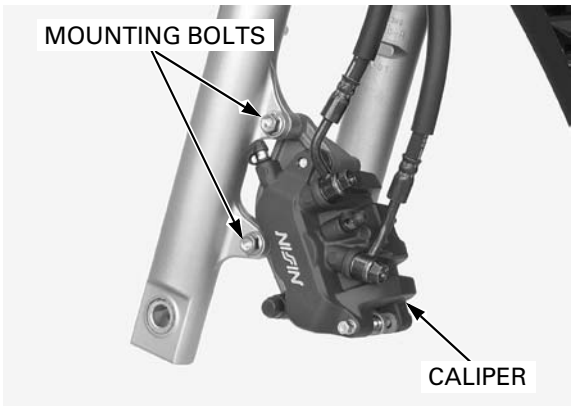

Remove the upper pinch bolt.
Loosen the lower pinch bolt and remove the fork leg.

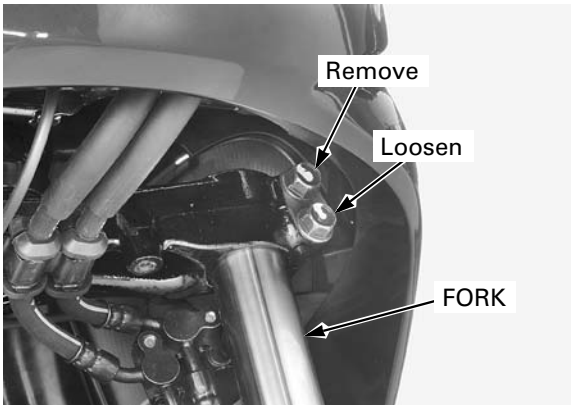

DISASSEMBLY

Hold the bottom case in a vise with soft jaws or shop towels.

Remove the socket bolt after draining the fork fluid.

Loosen the fork socket bolt.

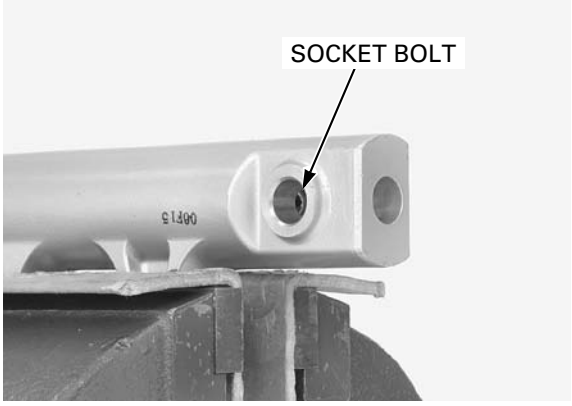

Remove the fork pipe cap.

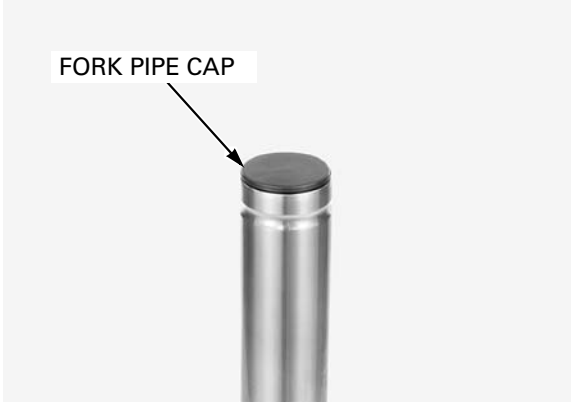

Press the spring seat using a hydraulic press and remove the stopper ring.

- Do not compress the fork spring more than necessary.
- Take care not to allow the spring seat to pop out when removing the fork leg from a hydraulic press.

Remove the spring seat.

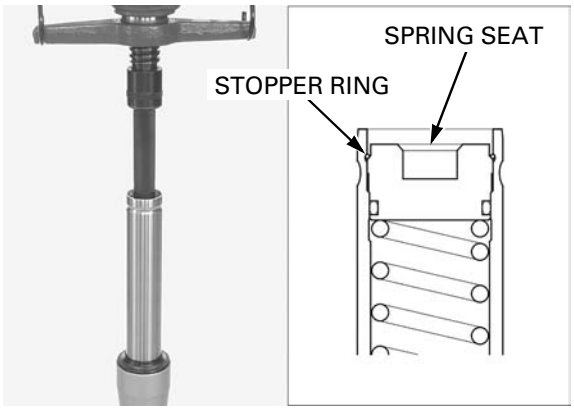

Remove the fork spring.

Pour out the fork fluid by pumping the fork pipe up and down several times.

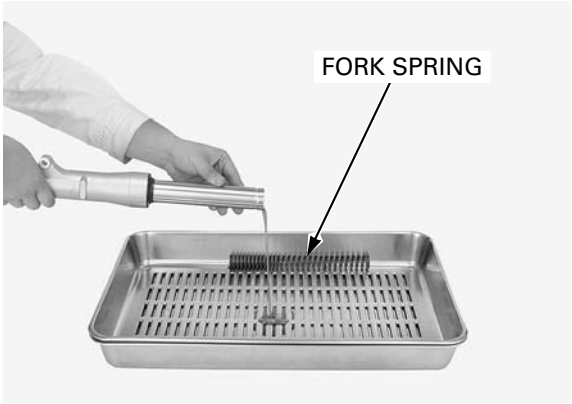

Remove the following:

- socket bolt
- sealing washer

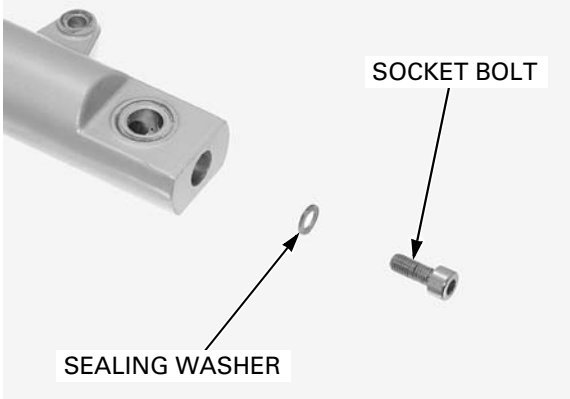

Do not remove the fork piston ring, unless it is necessary to replace with a new one.

- fork piston
- rebound spring

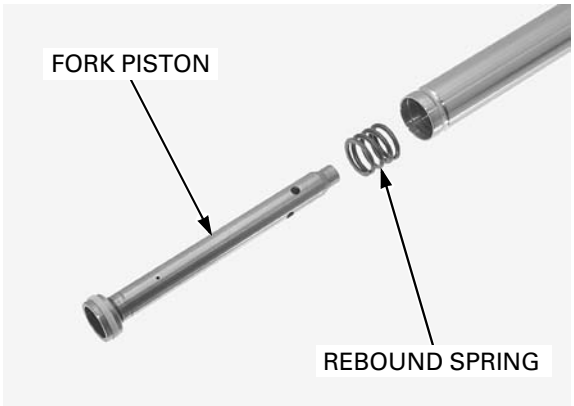

Do not scratch the fork pipe sliding surface.

- dust seal
- stopper ring

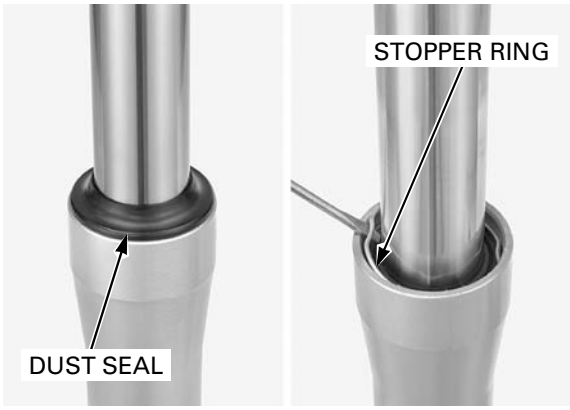

Using quick successive motion, pull the fork pipe out of the bottom case.

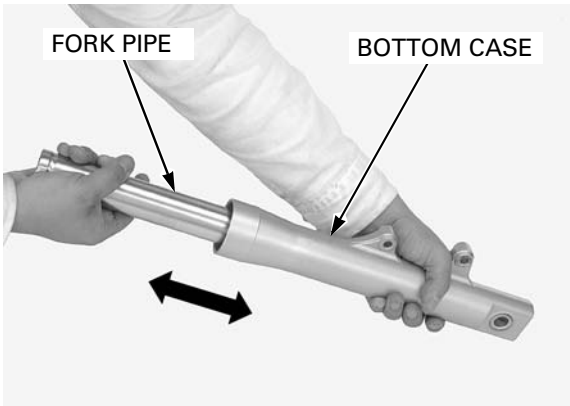

– oil lock piece

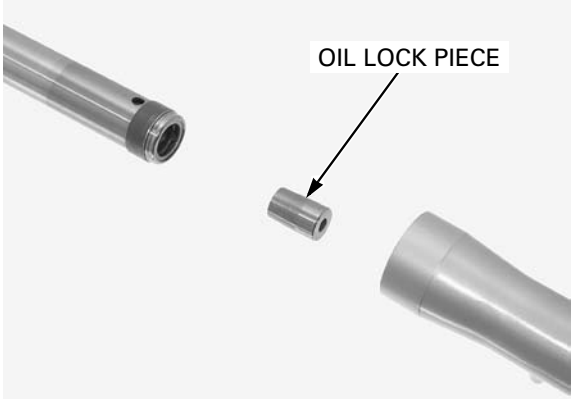

– oil seal
– back-up ring
– guide bushing

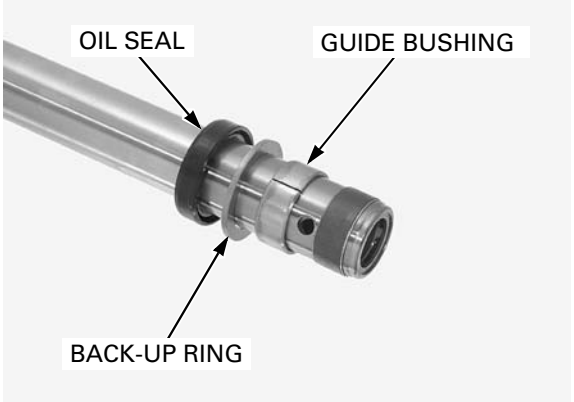

INSPECTION

FORK SPRING

Measure the fork spring free length.

SERVICE LIMIT: 257.5 mm (10.14 in)

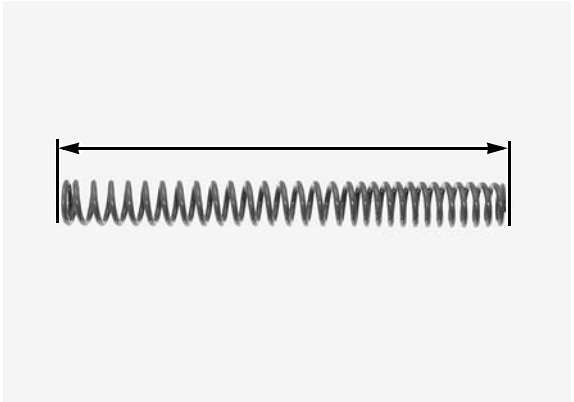

FORK PIPE/BOTTOM CASE/PISTON

Check the fork pipe and bottom case for score marks, and excessive or abnormal wear.

Replace any damaged component if necessary.

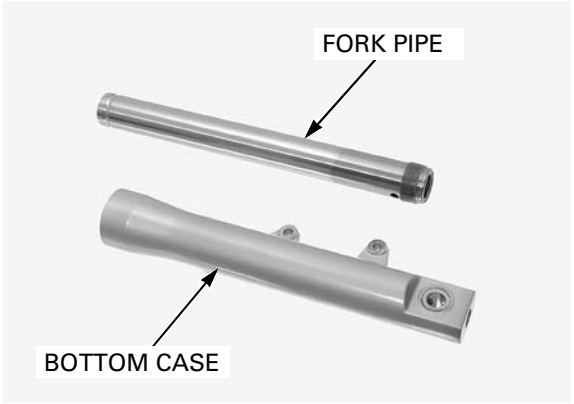

Check the fork piston for score marks, and excessive or abnormal wear.

Check the fork piston ring for wear or damage.
Check the rebound spring for fatigue or damage.

Replace any damaged component if necessary.

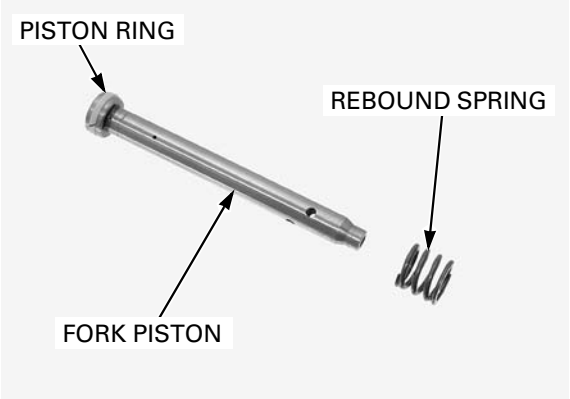

Set the fork pipe in V-blocks and measure the fork pipe runout with a dial indicator.
Actual runout is 1/2 the total indicator reading.

SERVICE LIMIT: 0.2 mm (0.01 in)

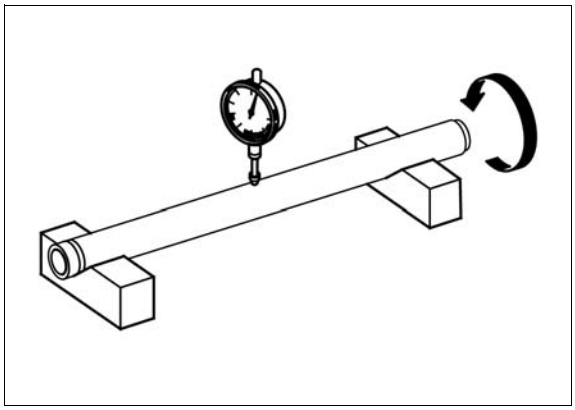

Visually inspect the fork pipe and guide bushings. Replace the bushing if there is excessive scoring or scratching, or if the teflon is worn so that the copper surface appears on more than 3/4 of the entire surface.

Check the back-up ring; replace it if there is any distortion at the points shown.

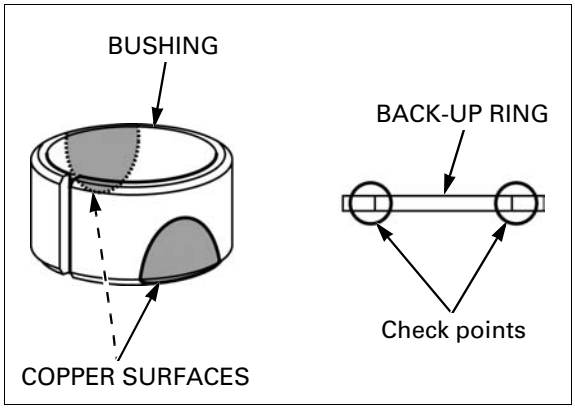

Do not remove the fork pipe bushing unless it is necessary to replace it with a new one.

Carefully remove the fork pipe bushing by prying the slot with a screwdriver until the bushing can be pulled off by hand.

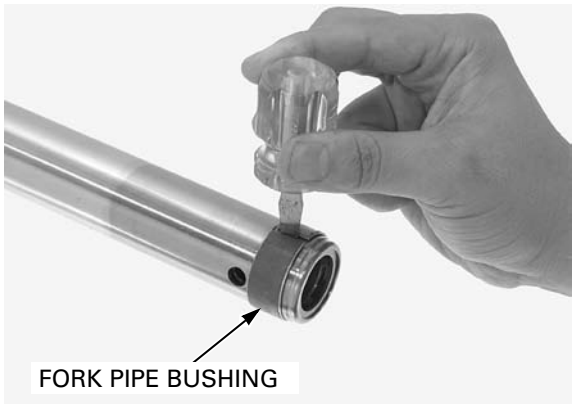

ASSEMBLY

Before assembly, wash all parts with a high flash point or non-flammable solvent and wipe them off completely.

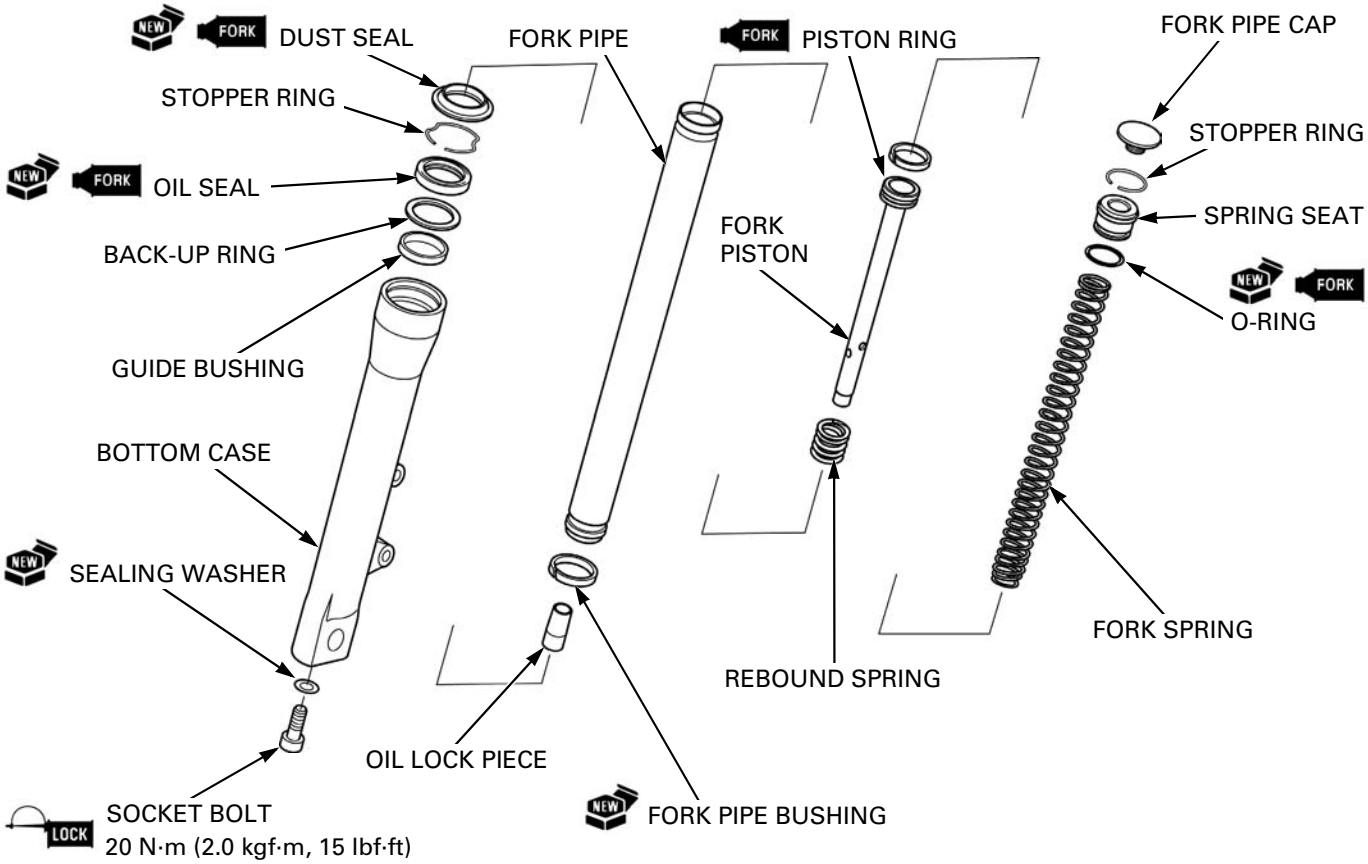

Do not open the bushing slit more than necessary.

Install a new fork pipe bushing, being careful not to damage the coating of the bushing if it has been removed.

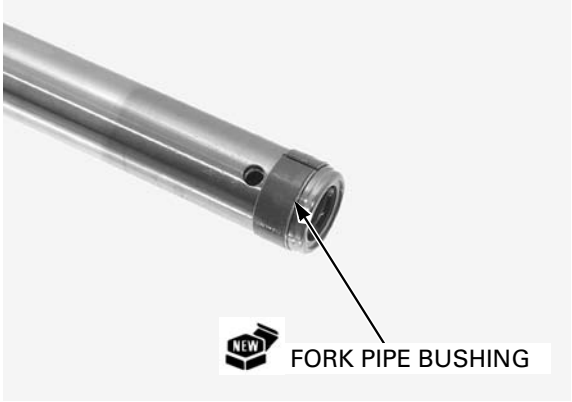

Install the guide bushing and back-up ring onto the fork pipe.
Apply fork fluid to the new oil seal lips.
Install the oil seal onto the fork pipe with its marked side facing up.

- Remove the burrs from the bushing mating surface, being careful not to peel off the coating.

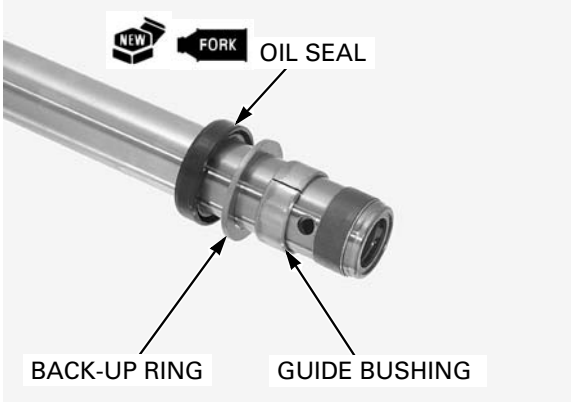

Install the rebound spring to the fork piston, then install them into the fork pipe.

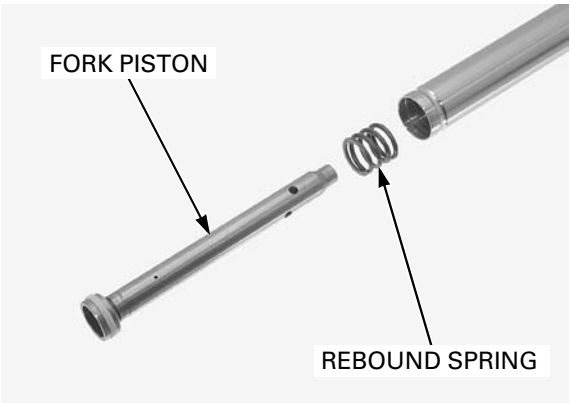

Install the oil lock piece to the fork piston end.
Install the fork pipe assembly into the bottom case.

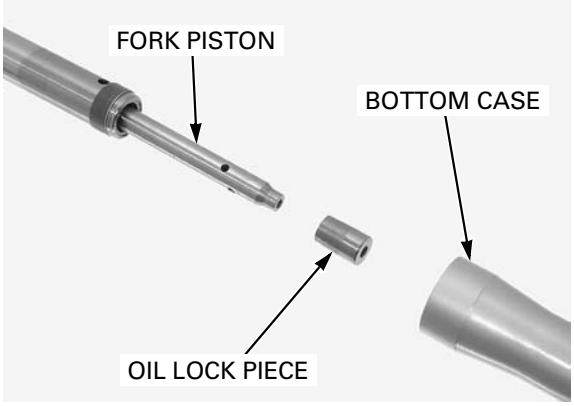

Hold the bottom case in a vise with soft jaws or shop towels.

Apply locking agent to the fork socket bolt threads.

Install the socket bolt with a new sealing washer into the fork piston.

If the fork piston turns with the socket bolt, temporarily install the fork spring and spring seat.

Tighten the fork socket bolt to the specified torque.

TORQUE: 20 N·m (2.0 kgf·m, 15 lbf·ft)

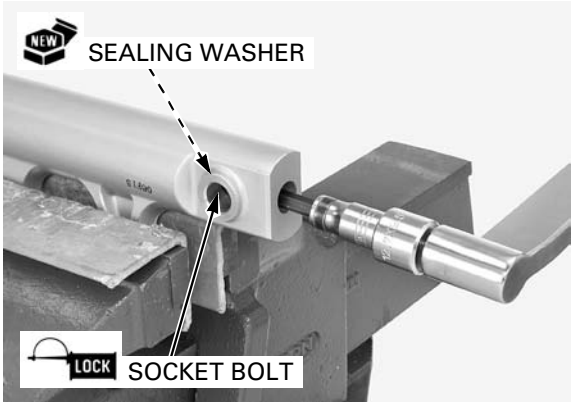

Drive the oil seal until the stopper ring groove is visible using a special tools.

TOOLS:

Fork seal driver weight	**07747-0010100**
Fork seal driver attachment, 37.2 mm I.D.	**07747-0010600**

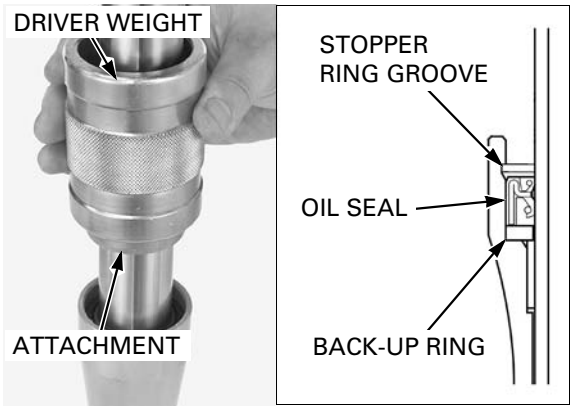

Install the stopper ring into the groove in the bottom case, being careful not to scratch the fork pipe sliding surface.

Coat a new dust seal lip with fork fluid and install it.

Pour the specified amount of the recommended fork fluid into the fork pipe.

RECOMMENDED FORK FLUID:
Honda Ultra Cushion Oil 10W or equivalent

FLUID CAPACITY:
151 ± 2.5 cm³ (5.1 ± 0.08 US oz, 5.3 ± 0.09 Imp oz)

Slowly pump the fork pipe several times to remove any trapped air from the lower portion of the fork pipe.

Compress the fork pipe fully. Measure the fluid level from the top of the fork pipe.

FLUID LEVEL: 90 mm (3.5 in)

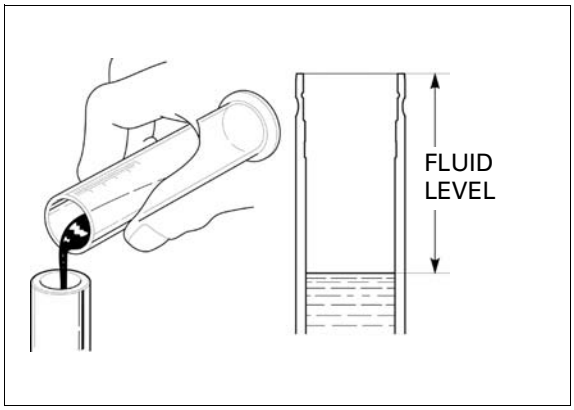

Pull the fork pipe up and install the fork spring with the tightly wound coil side facing down.

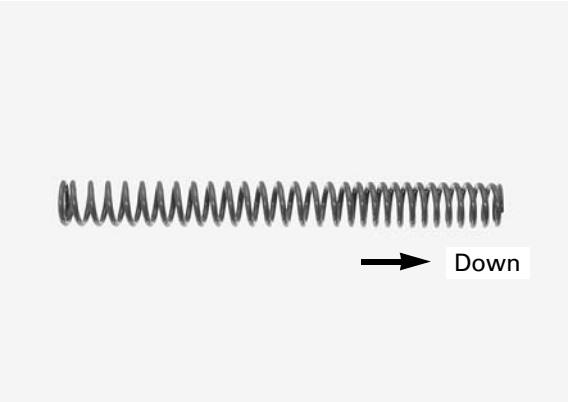

Coat a new O-ring with fork fluid and install it into the spring seat groove.

Set the fork assembly, spring seat and stopper ring onto the hydraulic press.
Press the spring seat into the fork pipe until the stopper ring groove is visible.
Install the stopper ring into the groove of the fork pipe.

- Do not compress the fork spring more than necessary.

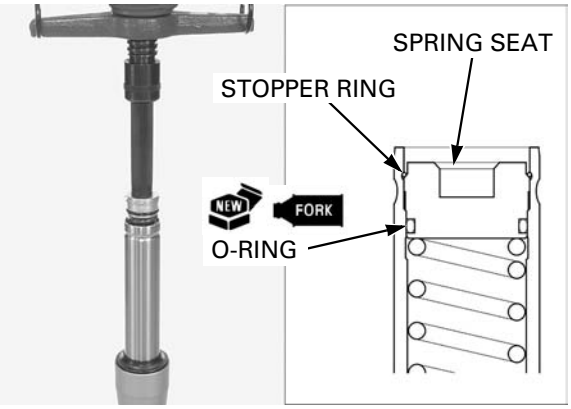

Install the fork pipe cap on to the fork pipe.

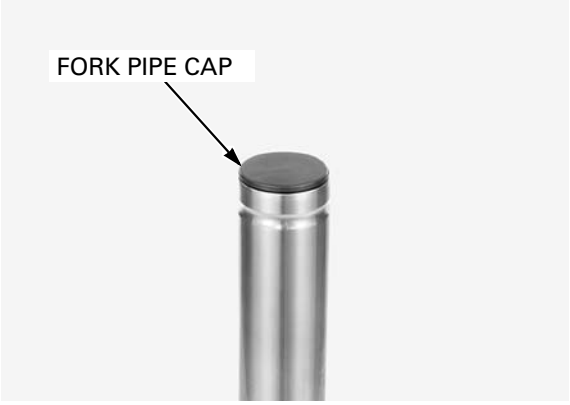

INSTALLATION

Install the fork leg into the steering stem and align the fork pipe groove with the bolt hole, then install the upper pinch bolt.
Tighten the upper/lower pinch bolts to the specified torque.

TORQUE: 49 N·m (5.0 kgf·m, 36 lbf·ft)

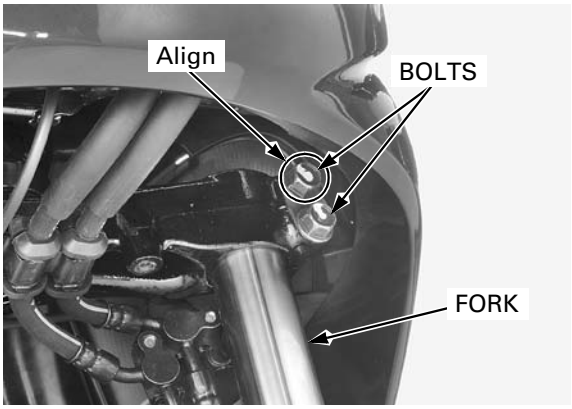

Left fork only: Install the brake caliper with new mounting bolts and tighten the bolts to the specified torque.

TORQUE: 30 N·m (3.1 kgf·m, 22 lbf·ft)

Install the following:

- front fender (page 3-8)
- front wheel (page 15-10)

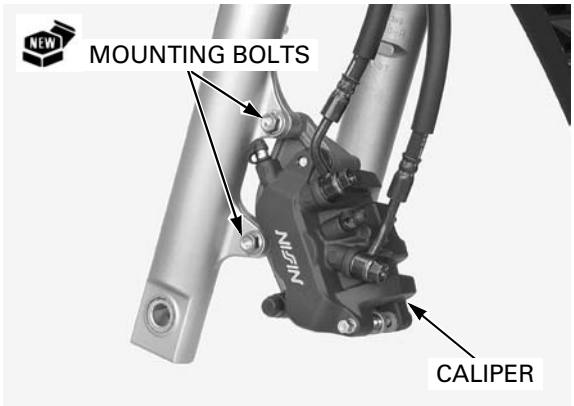

HANDLEBAR

REMOVAL

Remove the following

- front upper cover (page 3-9)
- front handlebar cover (page 3-14)
- rear handlebar cover (page 3-14)

Release the wire band and turn signal relay from the handlebar.

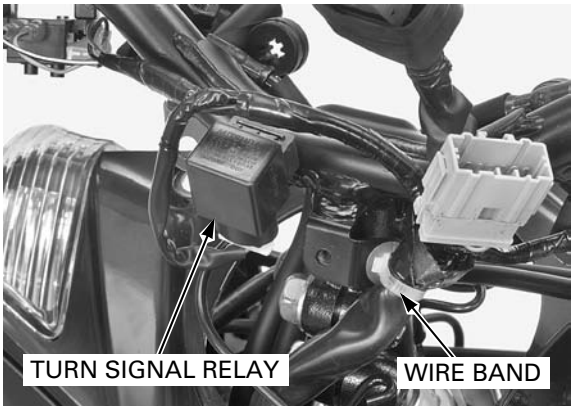

Disconnect the inhibitor switch and rear brake light switch connectors.

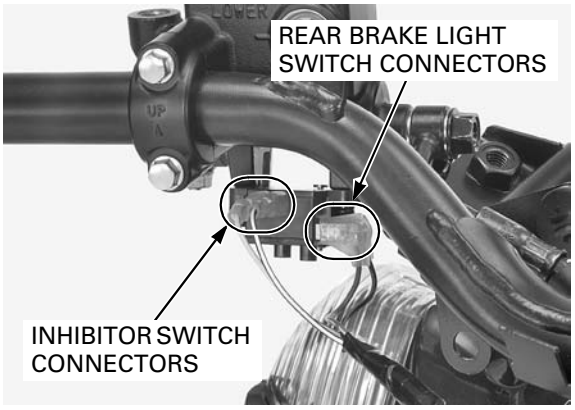

Remove the following:

Keep the rear master cylinder upright, to prevent air from entering the hydraulic system. Do not twist the brake hose.

- two bolts
- holder
- rear brake master cylinder

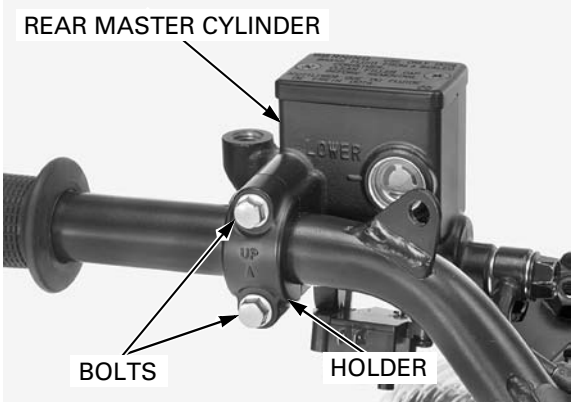

- screw
- left handlebar weight
- handlebar grip

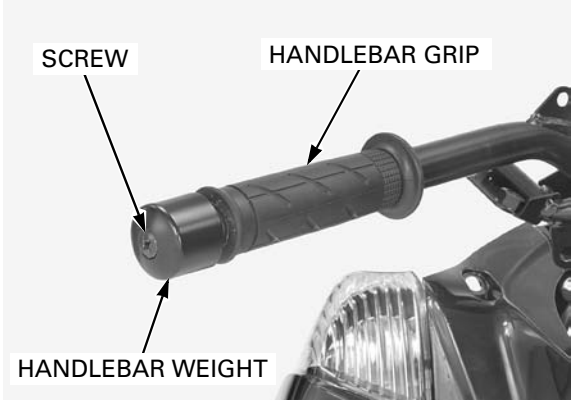

Disconnect the front brake light switch connectors.

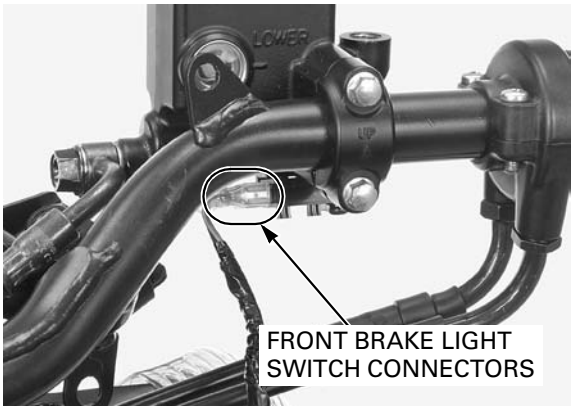

Keep the front master cylinder upright, to prevent air from entering the hydraulic system.
Do not twist the brake hose.

Remove the following:

- two bolts
- holder
- front brake master cylinder

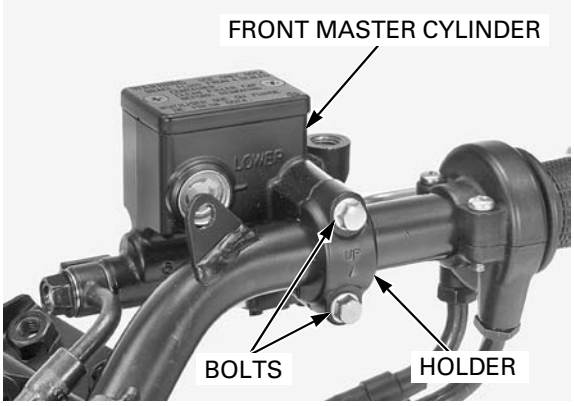

- screw
- right handlebar weight

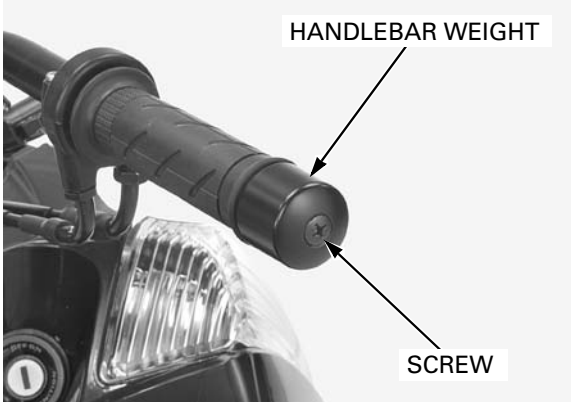

- two screws
- upper throttle housing

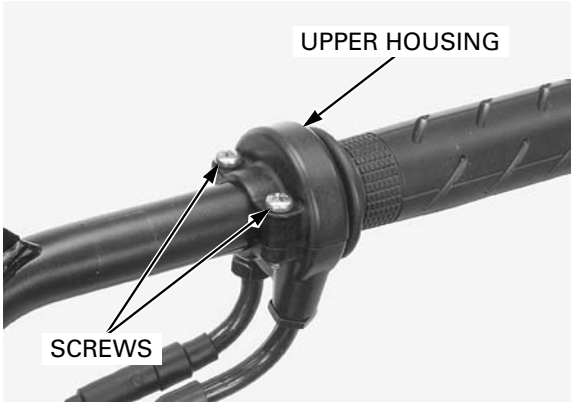

Remove the following from the cable guides:

- throttle cables
- front brake hose
- rear brake hose
- combination meter/handlebar switch wire

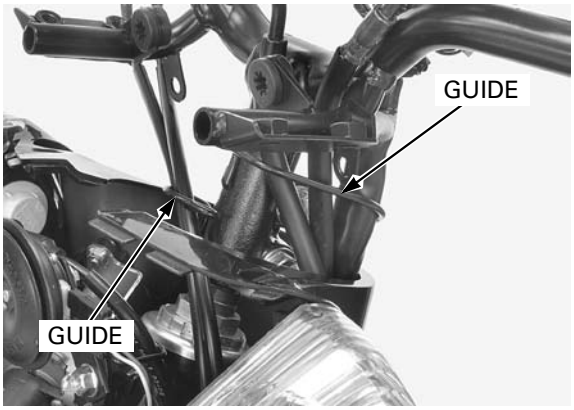

Remove the handlebar bolts.
Remove the handlebar.

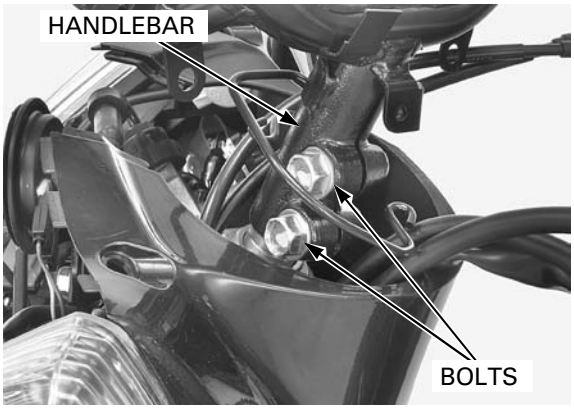

Remove the lower throttle housing and throttle pipe/right handlebar grip from the handlebar.

Disconnect the throttle cables from the throttle pipe.

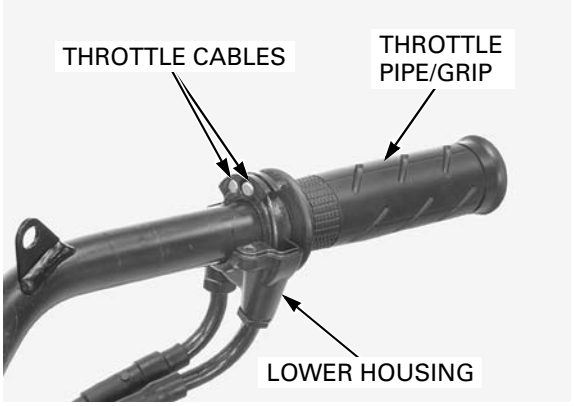

INSTALLATION

When removing the right handlebar grip from the throttle pipe, apply Honda Bond A or equivalent to the inside of the grip and to the clean surfaces of the throttle pipe.

Allow the adhesive to dry for 1 hour before using.

Wait 3 – 5 minutes and install the grip.
Rotate the grip for even application of the adhesive.

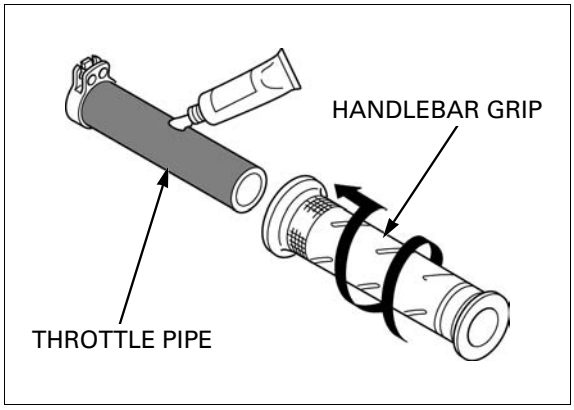

Clean the sliding surfaces of the throttle pipe and handlebar.
Apply 0.1 – 0.2 g of grease to the throttle pipe flange groove and sliding surface.

Connect the throttle cable to the throttle pipe flange.

Install the lower throttle housing and throttle grip/throttle pipe onto the handlebar and set the lower throttle housing by aligning the locating pin with the hole in the handlebar.

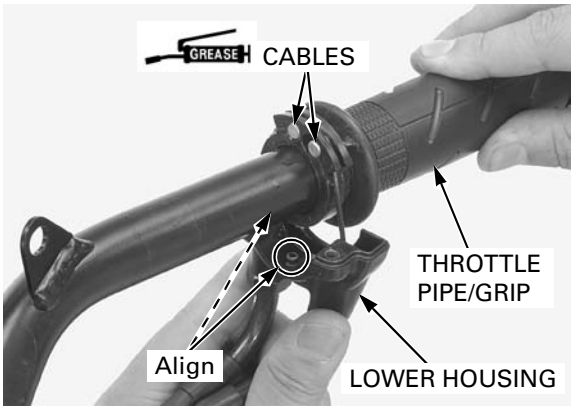

Install the handlebar by aligning the locating pin on the handlebar and cut-off of the steering stem.

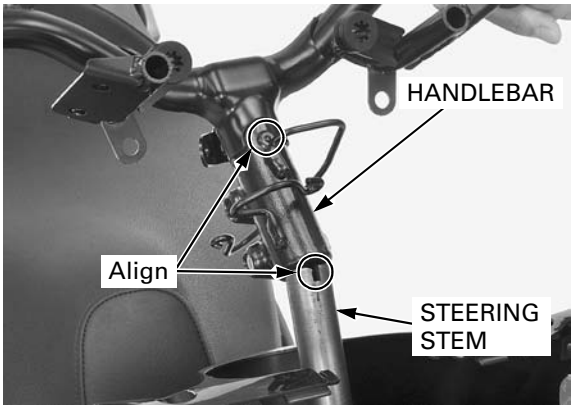

Align the groove of the steering stem with the upper bolt hole in the handlebar, then install a new upper handlebar bolt.
Install a new lower handlebar bolt.
Tighten the upper/lower handlebar bolts to the specified torque.

TORQUE: 128 N·m (13.1 kgf·m, 94 lbf·ft)

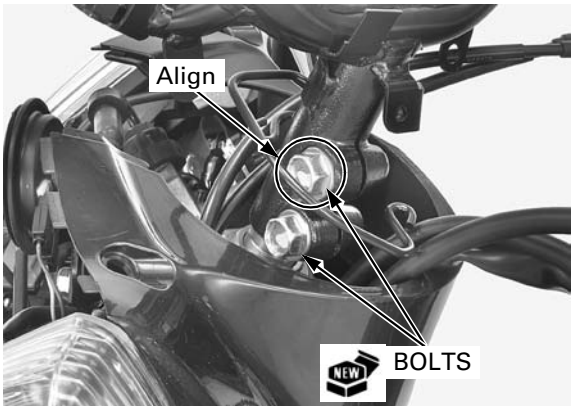

Route the cables and hose properly (page 1-19).

Set the following into the cable guides:

- combination meter/handlebar switch wire
- rear brake hose
- front brake hose
- throttle cables

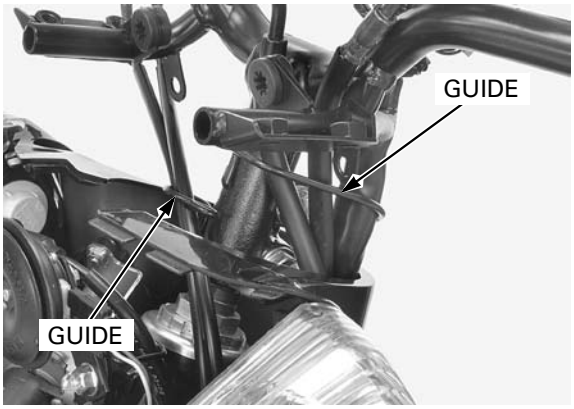

Install the upper throttle housing and tighten the two screws.

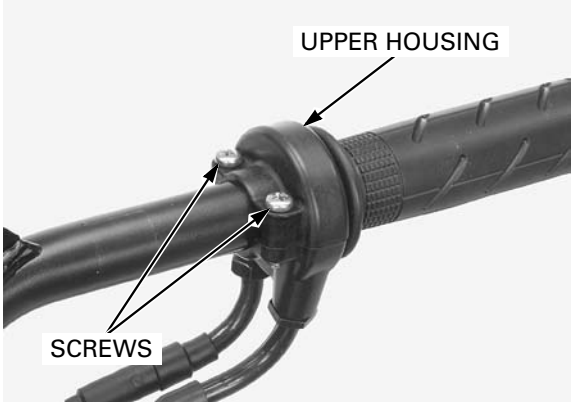

Install the right handlebar weight and tighten the new screw.

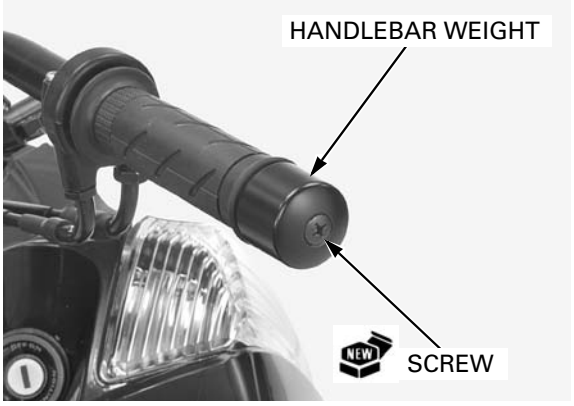

Set the front master cylinder by aligning the end of the master cylinder with the punch mark on the handlebar.
Set the holder with the "UP" mark facing up and tighten the upper bolt first, then tighten the lower bolt to the specified torque.

TORQUE: 12 N·m (1.2 kgf·m, 9 lbf·ft)

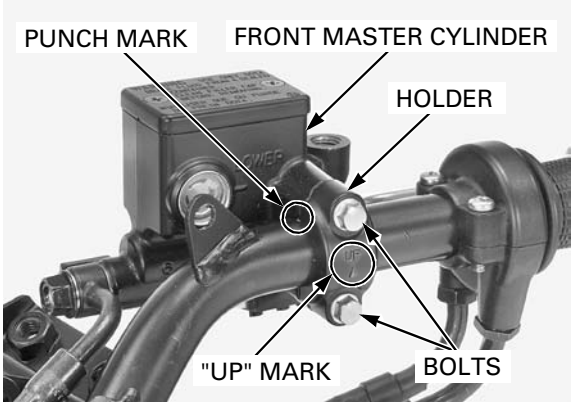

Connect the front brake light switch connectors.

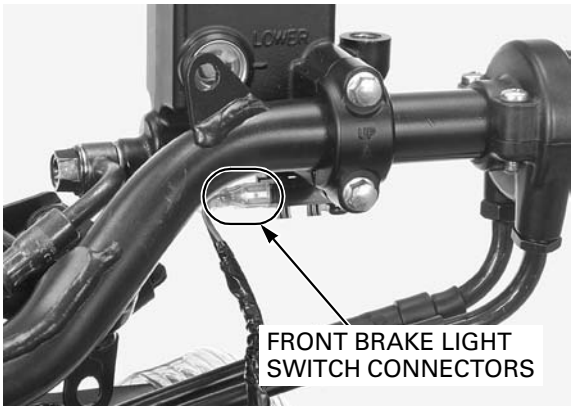

Clean the inside surface of the left handlebar grip and the outside surface of the handlebar.
Apply Honda Bond A or equivalent to the inside surface of the handlebar grip and to the outside surface of the handlebar.

Allow the adhesive to dry for 1 hour before using.

Wait 3 – 5 minutes and install the grip. Rotate the grip for even application of the adhesive.

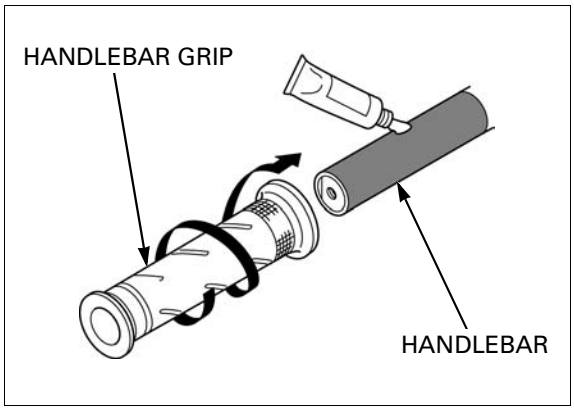

Install the left handlebar weight and tighten the new screw.

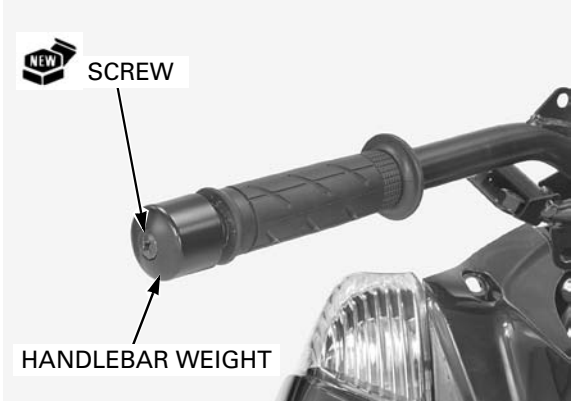

Set the rear master cylinder by aligning the end of the master cylinder with the punch mark on the handlebar.
Set the holder with the "UP" mark facing up and tighten the upper bolt first, then tighten the lower bolt to the specified torque.

TORQUE: 12 N·m (1.2 kgf·m, 9 lbf·ft)

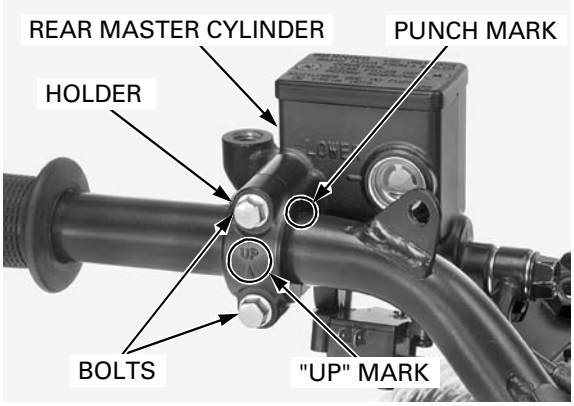

Connect the rear brake light switch and inhibitor switch connectors.

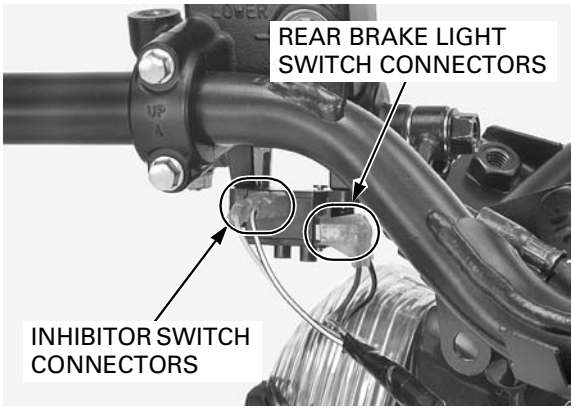

Set the turn signal relay to the handlebar.
Secure the combination meter/handlebar switch wire to the wire band.

Install the following:

- rear handlebar cover (page 3-14)
- front handlebar cover (page 3-14)
- front upper cover (page 3-9)

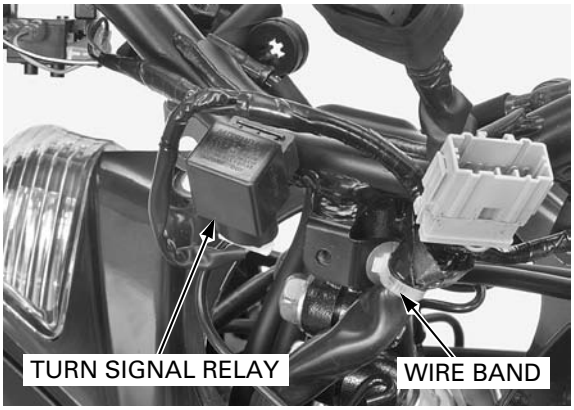

STEERING STEM

REMOVAL

- Always replace the bearings and races as a set.

Remove the following:

– front upper cover (page 3-9)
– front handlebar cover (page 3-14)
– rear handlebar cover (page 3-14)
– front inner cover (page 3-10)
– fork (page 15-12)
– handlebar (page 15-20)

Remove the bolts and brake hose clamps.

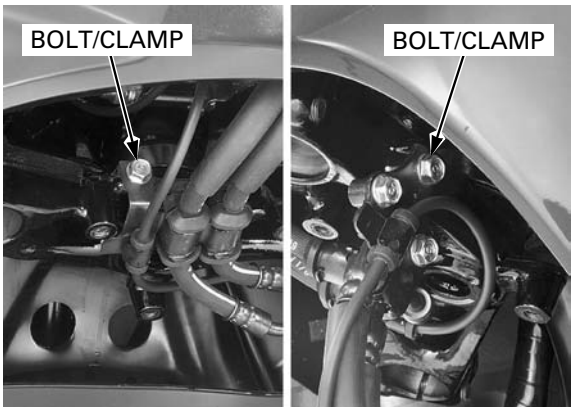

Hold the steering stem adjusting nut using the pin spanner then loosen the steering stem lock nut using the socket wrench.

TOOLS:

Socket wrench	**07916-KM10000**
Pin spanner	**07702-0020001**

Remove the steering stem lock nut.

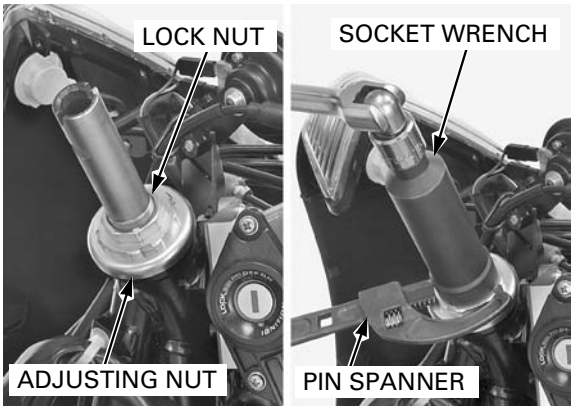

Hold the steering stem and loosen the steering stem adjusting nut using the pin spanner.

TOOL:

Pin spanner	**07702-0020001**

Remove the steering stem adjusting nut while supporting the steering stem.

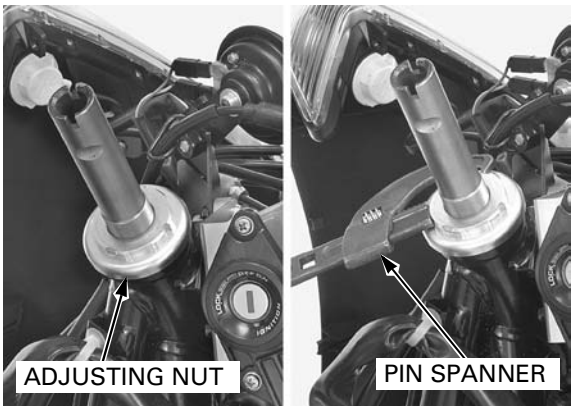

Remove the following:

- steering stem
- dust seal
- upper inner race
- upper steering bearing
- lower steering bearing

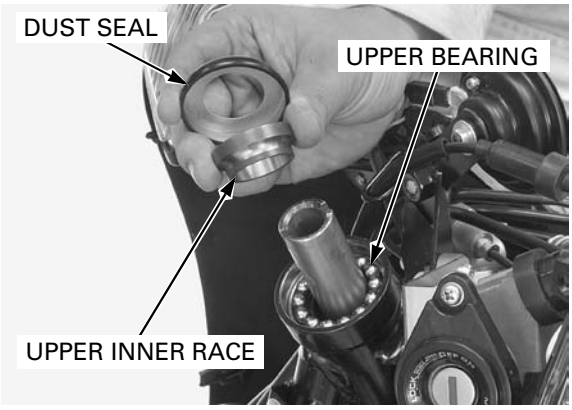

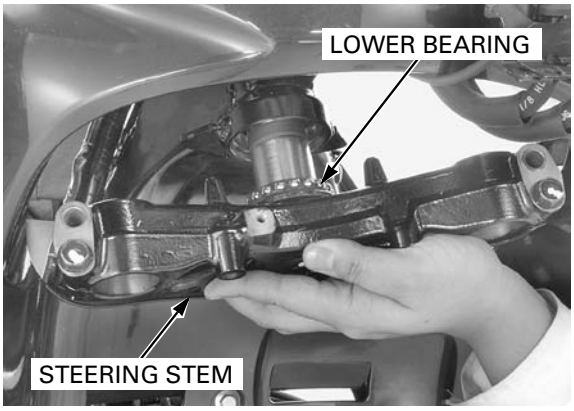

Remove the upper outer race using the special tools.

TOOLS:

Adjustable bearing remover	**07YAC-0010102**
Bearing remover shaft	**07JAC-PH80200**
Remover weight	**07741-0010201**

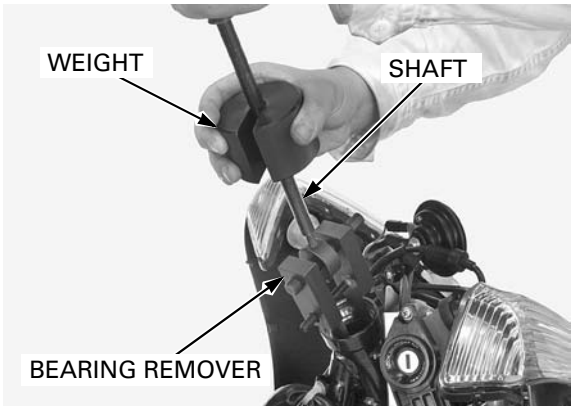

Remove the lower outer race using the special tools.

TOOLS:

Adjustable bearing remover	**07YAC-0010102**
Bearing remover shaft	**07JAC-PH80200**
Remover weight	**07741-0010201**

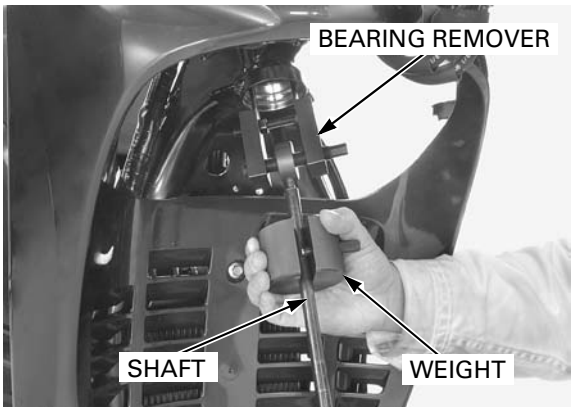

Remove the dust seal.

Remove the lower inner race with a chisel or equivalent tool, being careful not to damage the stem.

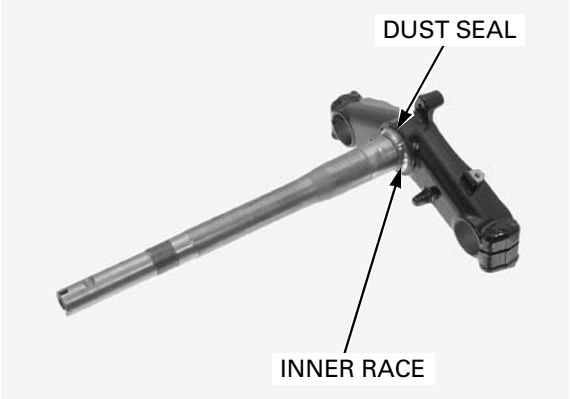

Press a new lower bearing inner race using a special tool and hydraulic press.

TOOL:

Attachment, 35 mm I.D.	**07746-0030400**

Apply grease (page 15-30) to a new lower dust seal lip and install it onto the steering stem.

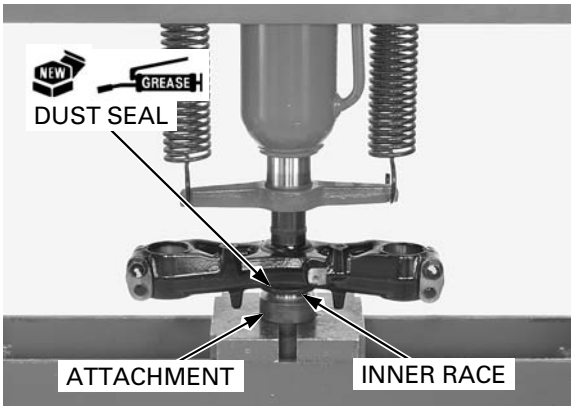

Drive in a new lower outer race into the steering head pipe using the special tools.

TOOLS:

Driver	**07749-0010000**
Attachment, 52 x 55 mm	**07746-0010400**

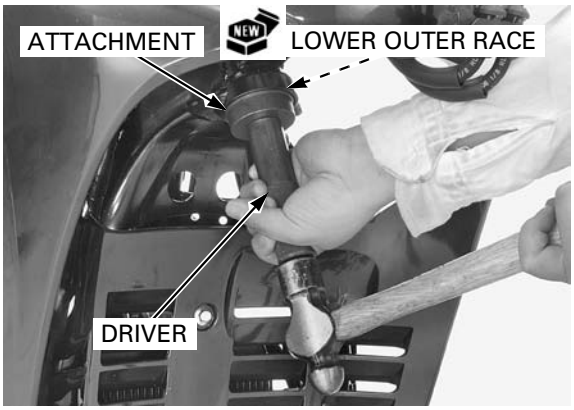

Drive in a new upper outer race into the steering head pipe using the special tools.

TOOLS:

Driver	**07749-0010000**
Attachment, 42 x 47 mm	**07746-0010300**

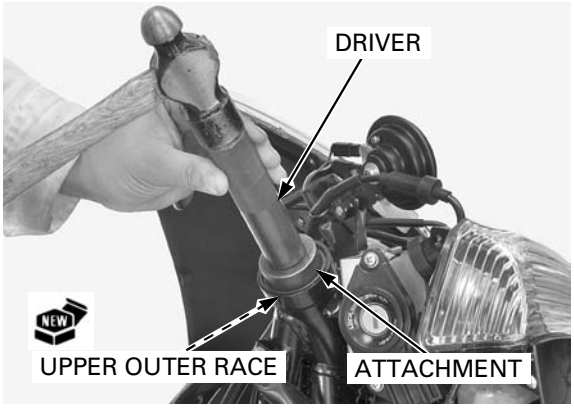

INSTALLATION

- Urea based multi-purpose grease with extreme pressure agent (example: EXCELITE EP2 manufactured by KYODO YUSHI, Japan), Shell Stamina EP2 or equivalent

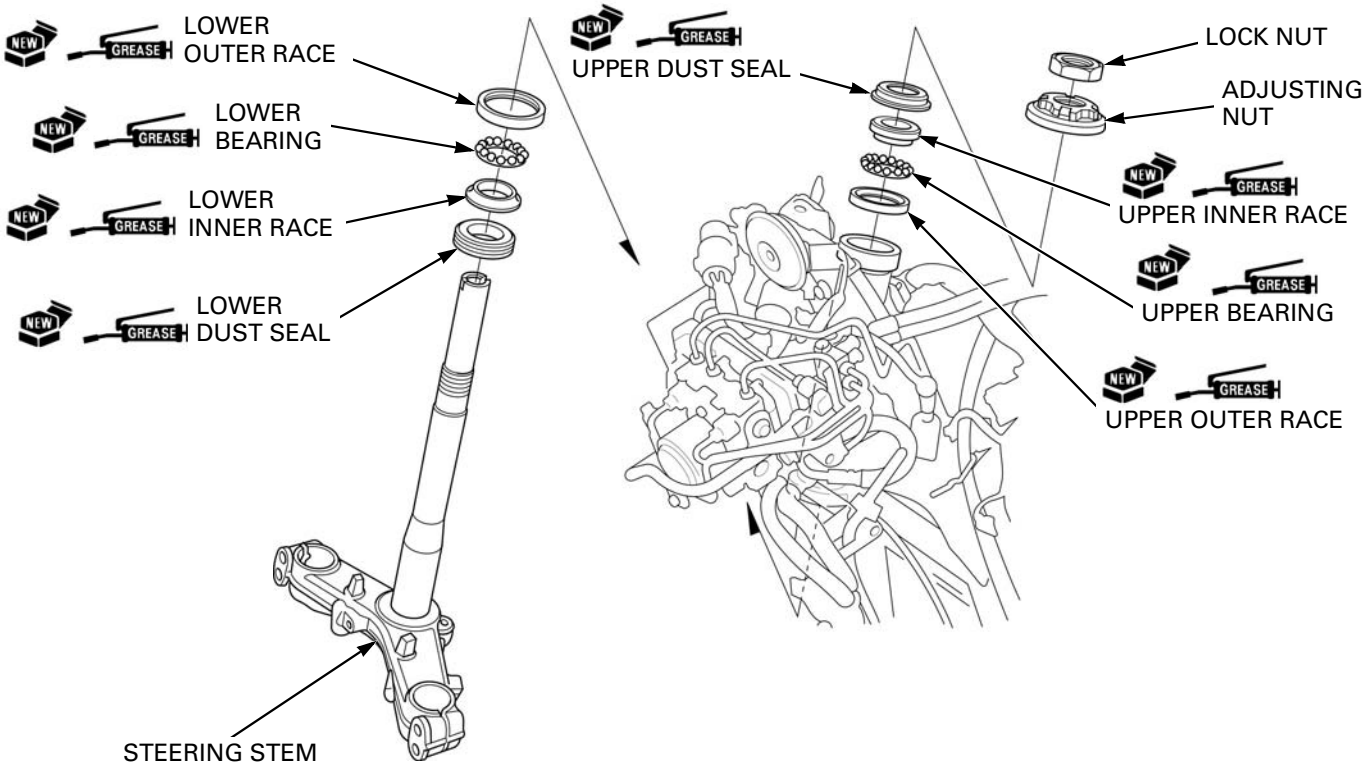

Apply 3 – 5 g (0.1 – 0.2 oz) of grease (page 15-30) to each new steering bearing and fill it up. Install the lower steering bearing onto the stem.
Apply grease to new upper dust seal lip and upper inner race.

Do not get grease on the stem threads.

Insert the steering stem into the steering head pipe and install the following while holding the stem:

- upper steering bearing
- upper inner race
- dust seal
- adjusting nut (and temporarily tighten)

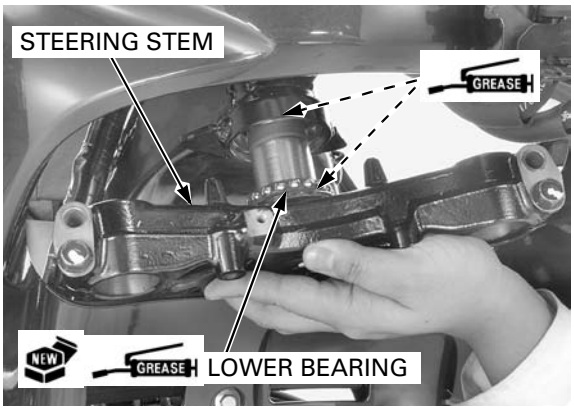

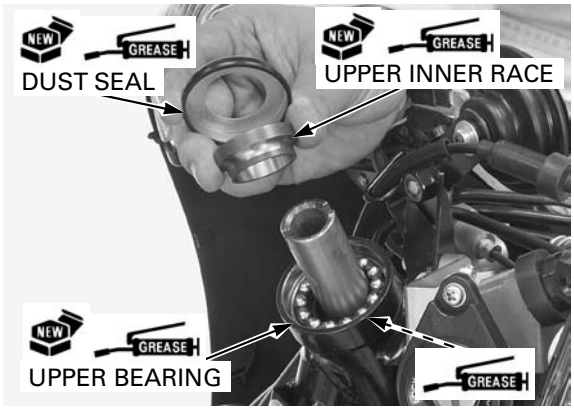

Refer to torque wrench reading information, on service information (page 15-3).

Tighten the steering stem adjusting nut to the specified torque using the specified tool.

TOOL:
Pin spanner **07702-0020001**

TORQUE:
Actual: 25 N·m (2.5 kgf·m, 18 lbf·ft)
Indicated: 18 N·m (1.8 kgf·m, 13 lbf·ft)

Turn the steering stem left and right, lock-to-lock several times to seat the bearings.

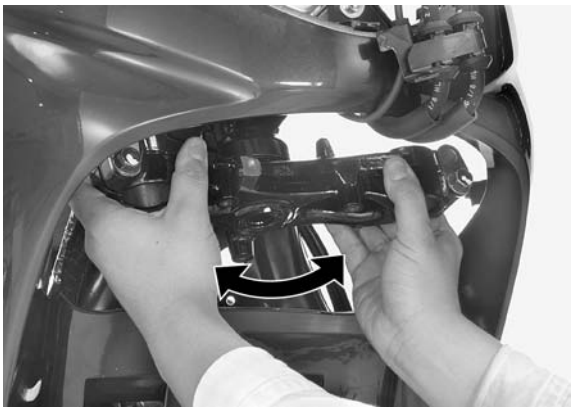

Loosen the steering stem adjusting nut fully and finger tighten it all the way.

Turn the inner race counterclockwise 45° (1/8) from above (finger tightened) position.

Install the lock nut.

Tighten the lock nut while holding the steering stem adjusting nut.

TOOLS:
Socket wrench **07916-KM10000**
Pin spanner **07702-0020001**

TORQUE: 68 N·m (6.9 kgf·m, 50 lbf·ft)

Make sure the steering stem moves smoothly, without play or binding.

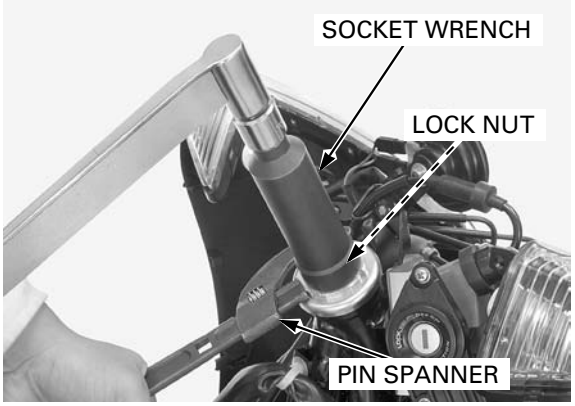

Install the brake hose clamps and tighten the bolts.

Install the following:

- handlebar (page 15-23)
- fork (page 15-20)
- front inner cover (page 3-10)
- rear handlebar cover (page 3-14)
- front handlebar cover (page 3-14)
- front upper cover (page 3-9)

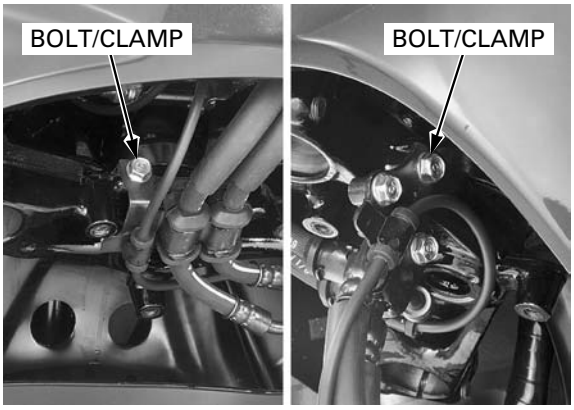

16. REAR WHEEL/SUSPENSION

COMPONENT LOCATION 16-2

SERVICE INFORMATION 16-3

TROUBLESHOOTING 16-4

REAR WHEEL/SWINGARM 16-5

REAR SHOCK ABSORBER 16-12

COMPONENT LOCATION

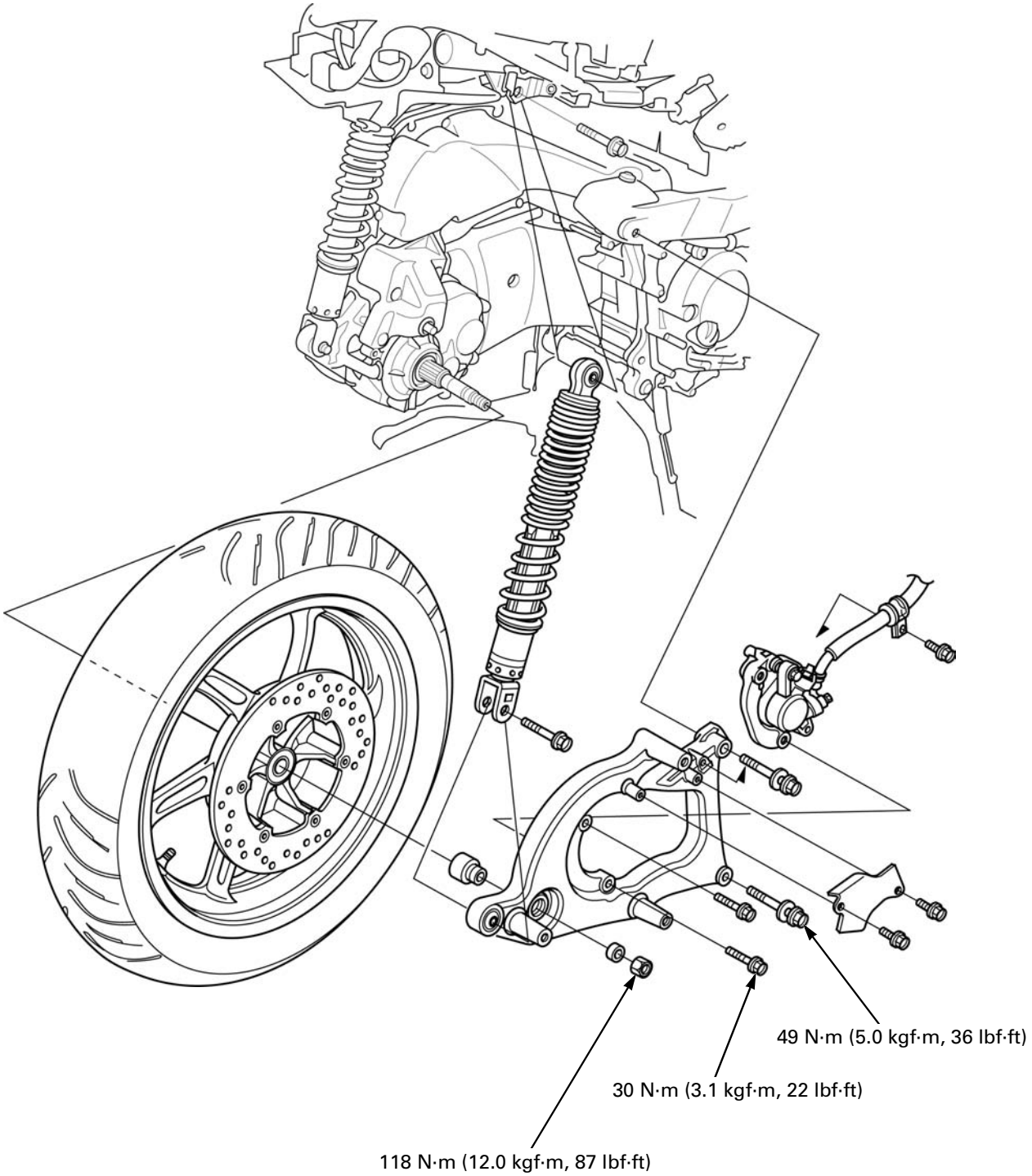

SERVICE INFORMATION

GENERAL

- A contaminated brake disc or pad reduces stopping power. Discard contaminated pads and clean a contaminated disc with a high quality brake degreasing agent.
- After rear wheel installation, check the brake operation by applying the brake lever.
- When servicing the rear wheel and suspension, support the scooter using a safety stand or hoist.
- Use only tires marked “TUBELESS” and tubeless valve stems on rims marked "TUBELESS TIRE APPLICABLE".
- Use genuine Honda replacement bolts and nuts for all suspension pivot and mounting point.
- For brake system service (page 17-4).

SPECIFICATIONS

Unit: mm (in)

ITEM			STANDARD	SERVICE LIMIT
Minimum tire tread depth			–	2.0 (0.08)
Cold tire pressure	Driver only		225 kPa (2.25 kgf/cm^2, 33 psi)	–
	Driver and passenger		225 kPa (2.25 kgf/cm^2, 33 psi)	–
Wheel	Rim runout	Radial	–	2.0 (0.08)
		Axial	–	2.0 (0.08)
	Balance weight		–	70 g (2.5 oz) maximum

TORQUE VALUES

Rear brake caliper mounting bolt	30 N·m (3.1 kgf·m, 22 lbf·ft)	ALOC bolt; replace with a new one
Swingarm mounting bolt	49 N·m (5.0 kgf·m, 36 lbf·ft)	
Rear axle nut	118 N·m (12.0 kgf·m, 87 lbf·ft)	U-nut
Rear brake disc socket bolt	42 N·m (4.3 kgf·m, 31 lbf·ft)	ALOC bolt; replace with a new one
Rear pulser ring torx bolt (ABS type only)	8 N·m (0.8 kgf·m, 5.9 lbf·ft)	ALOC bolt; replace with a new one

TOOLS

Driver 07749-0010000 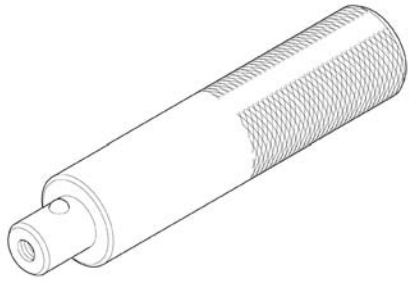	Attachment, 42 x 47 mm 07746-0010300 	Pilot, 17 mm 07746-0040400

TROUBLESHOOTING

Rear wheel wobbles
- Bent rim
- Faulty tire
- Axle nut and/or engine mounting bolt not tightened properly
- Unbalanced tire and wheel
- Loose or worn final gear shaft bearing
- Insufficient tire pressure

Soft suspension
- Low tire pressure
- Oil leakage from damper unit
- Weak rear shock absorber spring

Stiff suspension
- High tire pressure
- Bent damper rod
- Worn or damaged shock absorber bushings
- Worn or damaged engine mount bushings

Rear suspension noisy
- Loose mounting fasteners
- Weak or damage rear suspension bushings
- Faulty shock absorber

REAR WHEEL/SWINGARM

REMOVAL

Remove the exhaust pipe/muffler (page 3-15).

Support the scooter securely on its centerstand.

Lower the rear wheel and ground it, then loosen the rear axle nut.

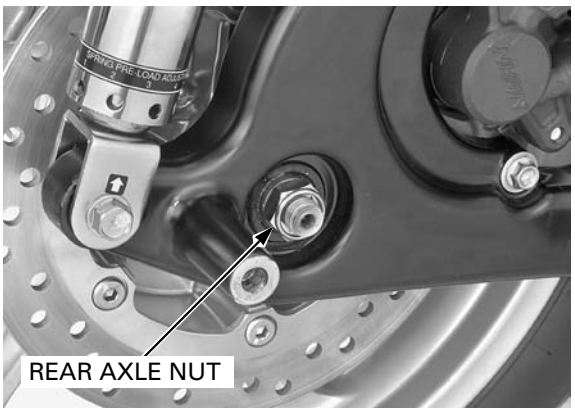

Support the left crankcase and remove the following:

– two bolts
– brake hose protector

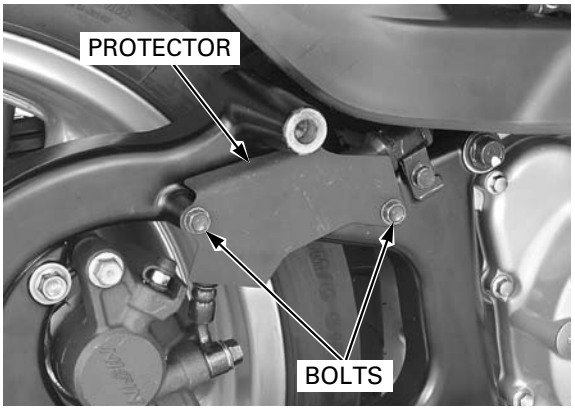

Support the brake caliper so that it does not hang from the brake hose. Do not twist the brake hose. Do not operate the brake lever after removing the brake caliper.

– bolt and brake hose clamp
– two caliper mounting bolts
– rear brake caliper

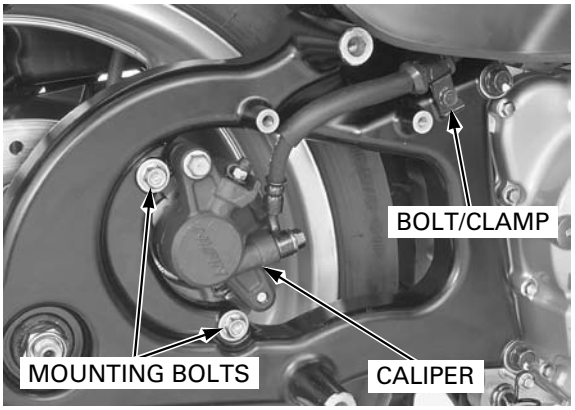

– right side shock absorber lower mounting bolt (and secure the shock absorber with a piece of rope)

– axle nut
– two mounting bolts
– swingarm

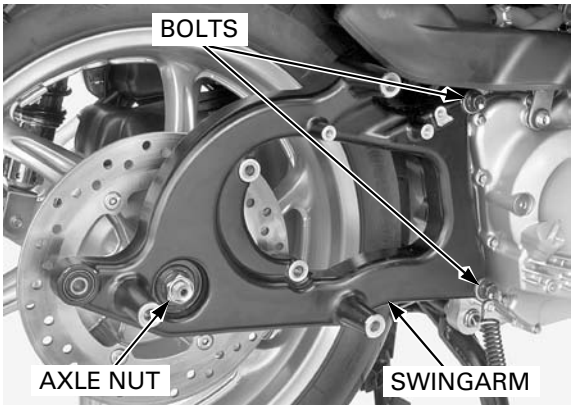

– inside collar
– outside collar

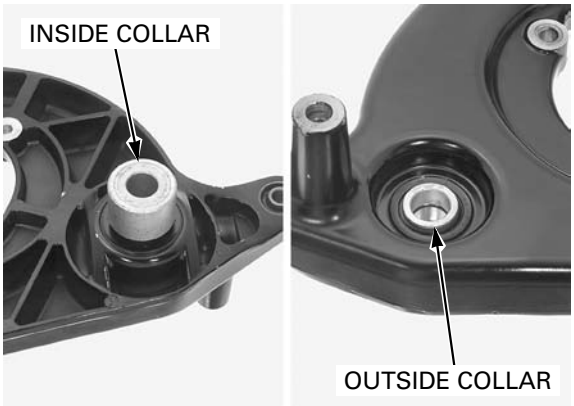

– rear wheel

INSPECTION

WHEEL

Check the wheel rim runout using dial indicators. Actual runout is 1/2 the total indicator readings.

SERVICE LIMITS:
Radial: 2.0 mm (0.08 in)
Axial: 2.0 mm (0.08 in)

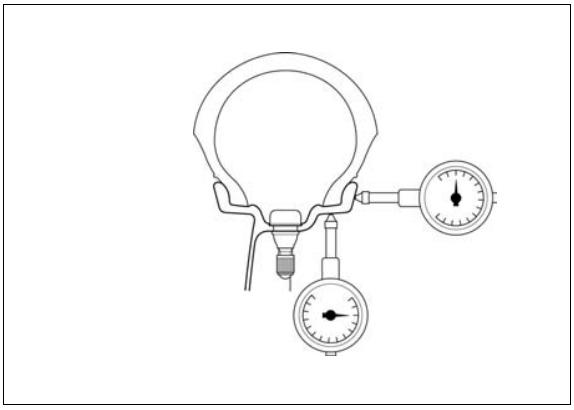

WHEEL BALANCE

Refer to page 15-7 for wheel balance. Do not add balance weight more than 70 g (2.5 oz) to the rear wheel.

DISASSEMBLY

Remove the following:

ABS type only. Do not reuse the torx bolts.

- three torx bolts
- pulser ring

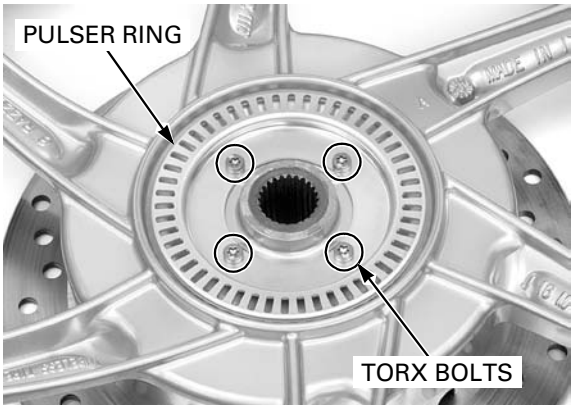

Do not reuse the socket bolts.

- six socket bolts
- brake disc

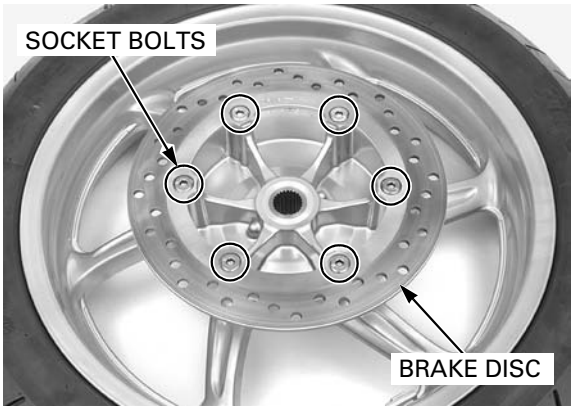

SWINGARM BEARING INSPECTION/ REPLACEMENT

Remove the dust seals from the both sides of the swingarm.

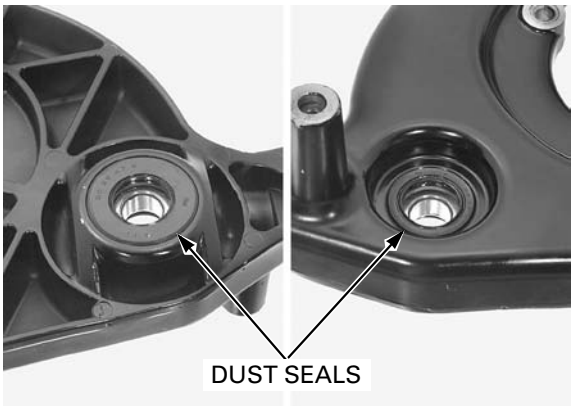

Remove the snap ring.

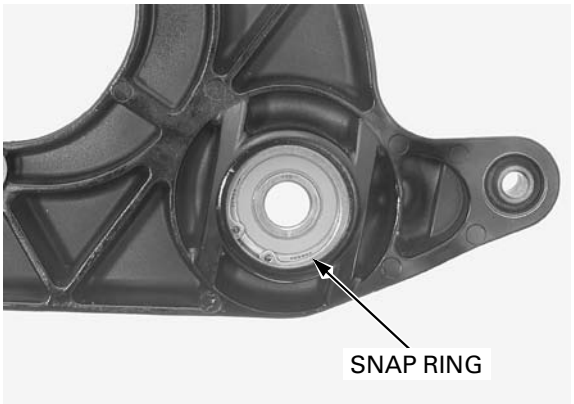

Turn the inner race of the bearing with your finger. The bearing should turn smoothly and quietly.
Also check that the bearing outer race fits tightly in the swingarm.
Replace the bearing if the inner race does not turn smoothly and quietly, or if the outer race fits loosely.

Drive the bearing out of the swingarm.

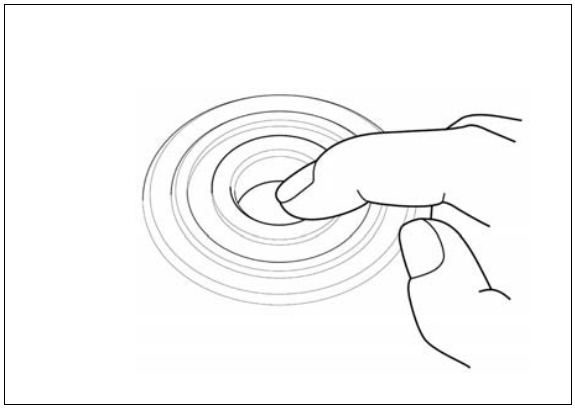

Drive in a new bearing into the swingarm squarely until it is fully seated, using the special tools.

TOOLS:

Driver	**07749-0010000**
Attachment, 42 x 47 mm	**07746-0010300**
Pilot, 17mm	**07746-0040400**

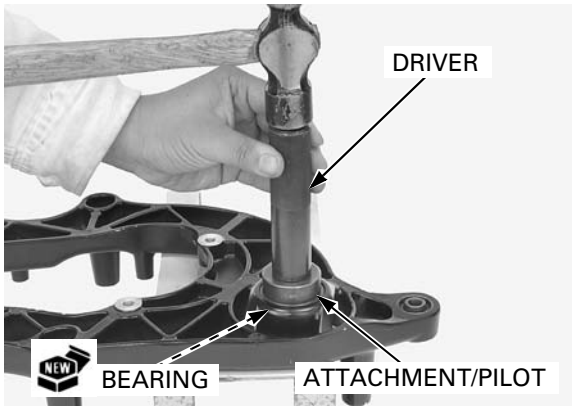

Install the snap ring into the swingarm groove securely with the chamfered side facing the bearing.

Apply grease to the lips of new dust seals.
Install each dust seal until it is flush with the swingarm.

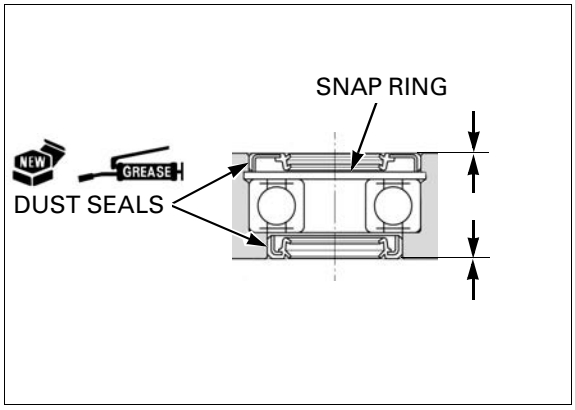

ASSEMBLY

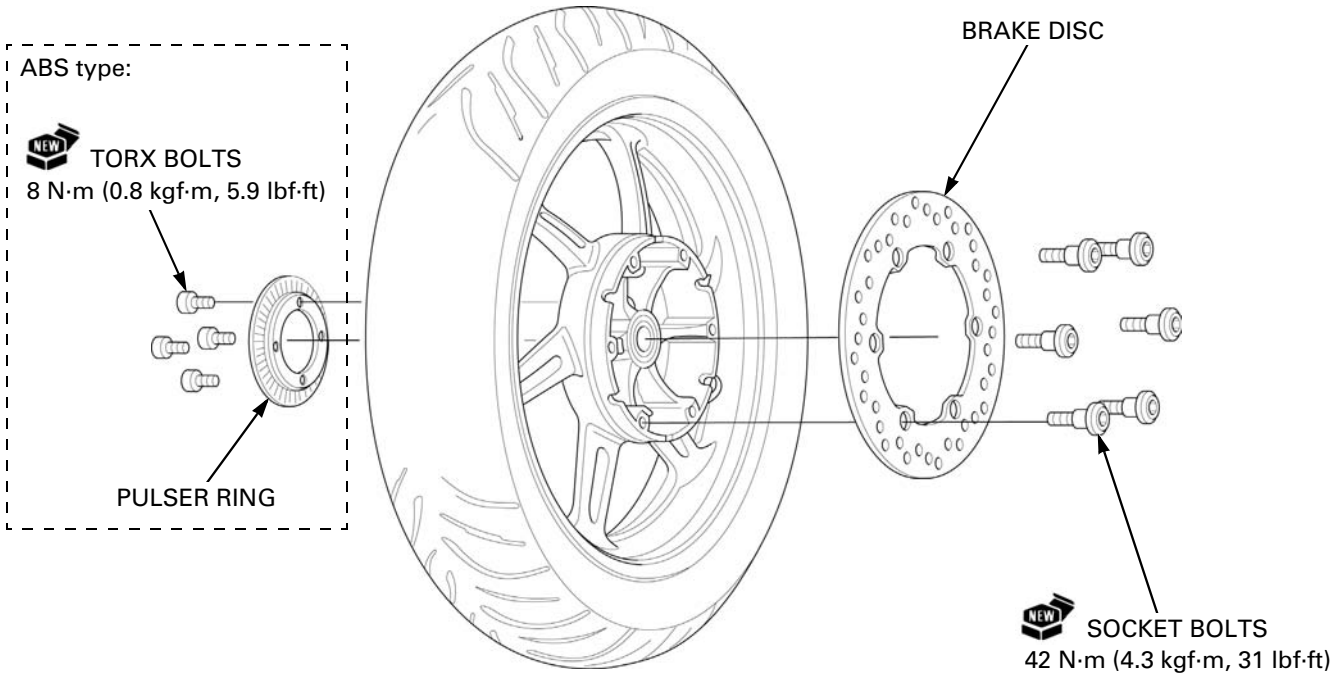

Do not get grease on the brake disc or stopping power will be reduces.

Install the brake disc onto the wheel hub with the marked side facing out.
Install new socket bolts and tighten them in a criss-cross pattern in several steps.

TORQUE: 42 N·m (4.3 kgf·m, 31 lbf·ft)

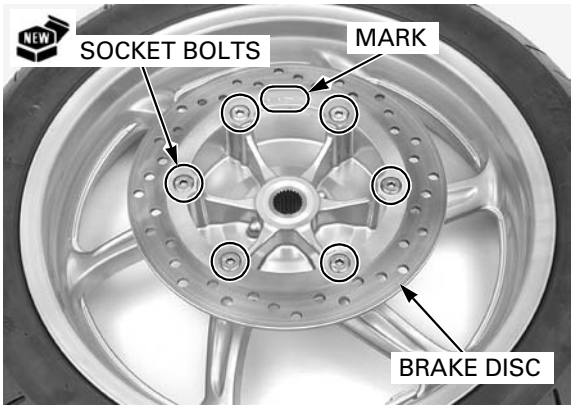

ABS type only.

Install the pulser ring onto the wheel hub.
Install and tighten new torx bolts to the specified torque.

TORQUE: 8 N·m (0.8 kgf·m, 5.9 lbf·ft)

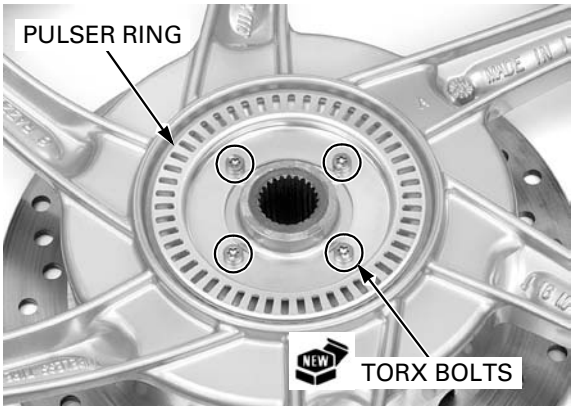

INSTALLATION

Install the rear wheel onto the final gear shaft, aligning the spline.

Apply 0.03 – 0.04 g grease to the groove of the final gear shaft.
Apply grease to bearing fitting area of the final gear shaft.

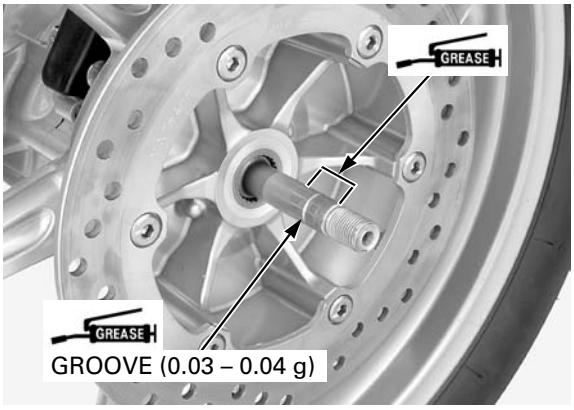

Install the inside/outside collars into the swingarm.

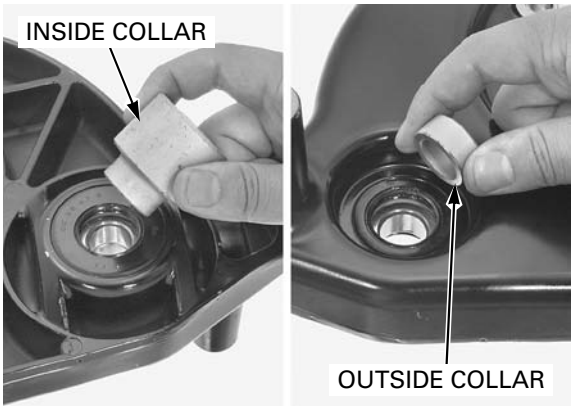

Install the swingarm and tighten the swingarm mounting bolts to the specified torque.

TORQUE: 49 N·m (5.0 kgf·m, 36 lbf·ft)

Install the rear axle nut and temporarily tighten it.

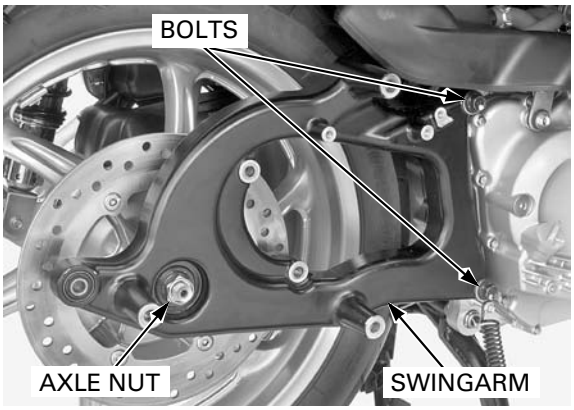

Set the right rear shock absorber and tighten the rear shock absorber lower mounting bolt.

Install the rear brake caliper to the swingarm and tighten the new rear brake caliper mounting bolts to the specified torque.

TORQUE: 30 N·m (3.1 kgf·m, 22 lbf·ft)

Install the brake hose clamp to the swingarm and tighten the bolt.

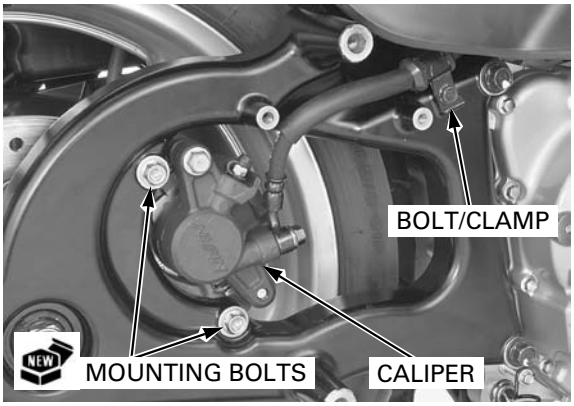

Install the brake hose protector to the swingarm and tighten the bolts.

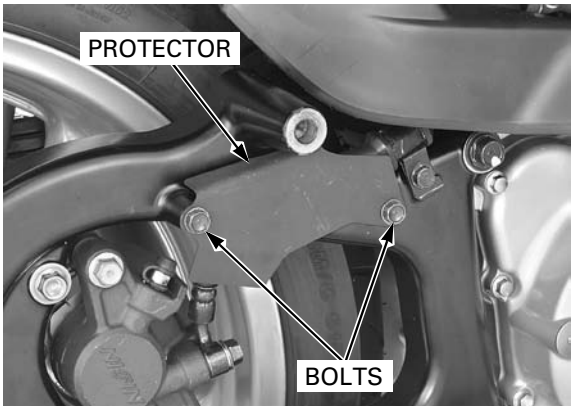

Tighten the rear axle nut to the specified torque.

TORQUE: 118 N·m (12.0 kgf·m, 87 lbf·ft)

Install the exhaust pipe/muffler (page 3-15).

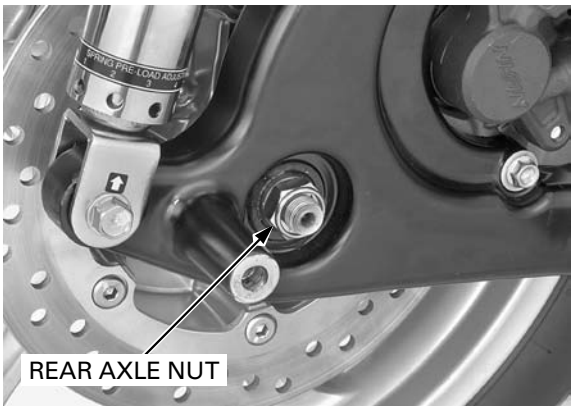

ABS type only. Measure the clearance (air gap) between the sensor and pulser ring at several points by turning the wheel slowly.
It must be within specification.

STANDARD: 0.2 – 1.2 mm (0.01 – 0.05 in)

The sensor air gap cannot be adjusted.
If it is not within specification, check each installed part for deformation, looseness and damage.

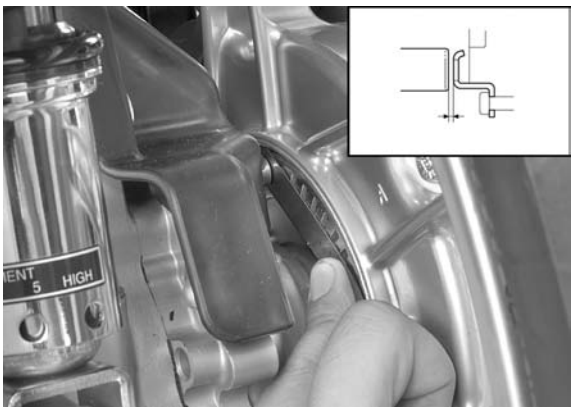

REAR SHOCK ABSORBER

REMOVAL/INSTALLATION

Remove the following:

- maintenance rid (page 3-4)
- luggage box (page 3-5)
- grab rail (page 3-5)
- body cover (page 3-6)
- rear fender A (page 3-7)

Support the engine with a jack or adjustable support to relieve stress from the shock absorber.

Remove the upper/lower mounting bolts and shock absorber.

Installation is in the reverse order of removal.

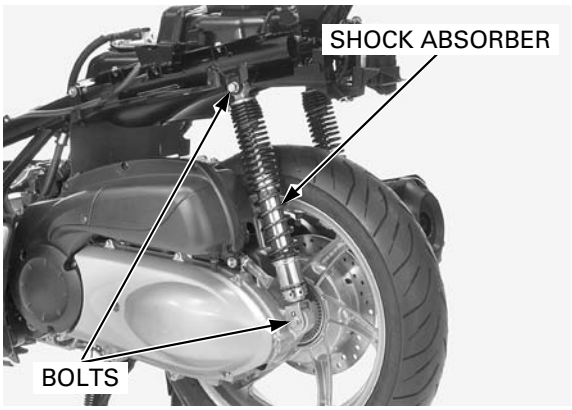

INSPECTION

Check the upper joint bushing for wear or damage.
Check the dumper rod for bent or damage.
Check the dumper unit for leakage or other damage.

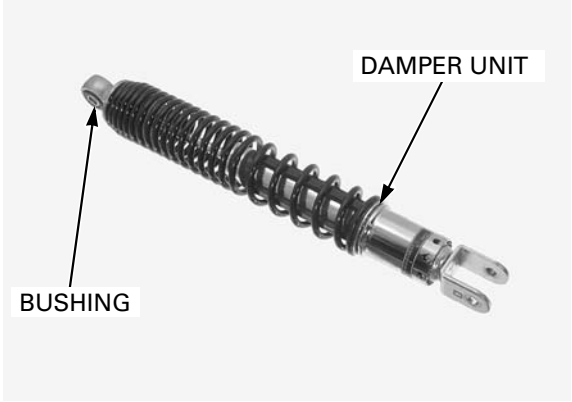

Check the engine or swingarm bushings for wear or damage.

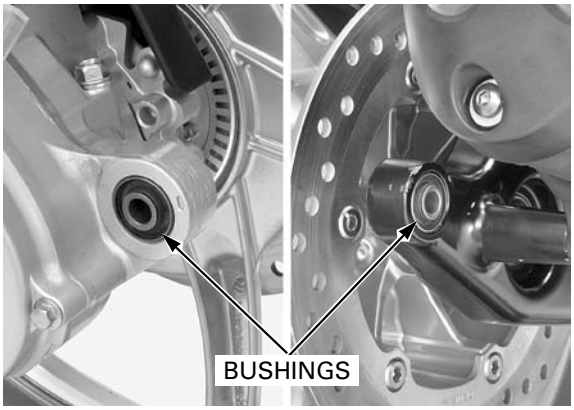

17. HYDRAULIC BRAKE

COMPONENT LOCATION 17-2

SERVICE INFORMATION 17-4

TROUBLESHOOTING 17-6

BRAKE FLUID REPLACEMENT/
AIR BLEEDING 17-7

BRAKE PAD/DISC 17-13

FRONT MASTER CYLINDER 17-16

REAR MASTER CYLINDER 17-21

DELAY VALVE (STD TYPE) 17-25

DELAY VALVE (ABS TYPE) 17-26

FRONT BRAKE CALIPER 17-27

REAR BRAKE CALIPER 17-32

COMPONENT LOCATION

FRONT:

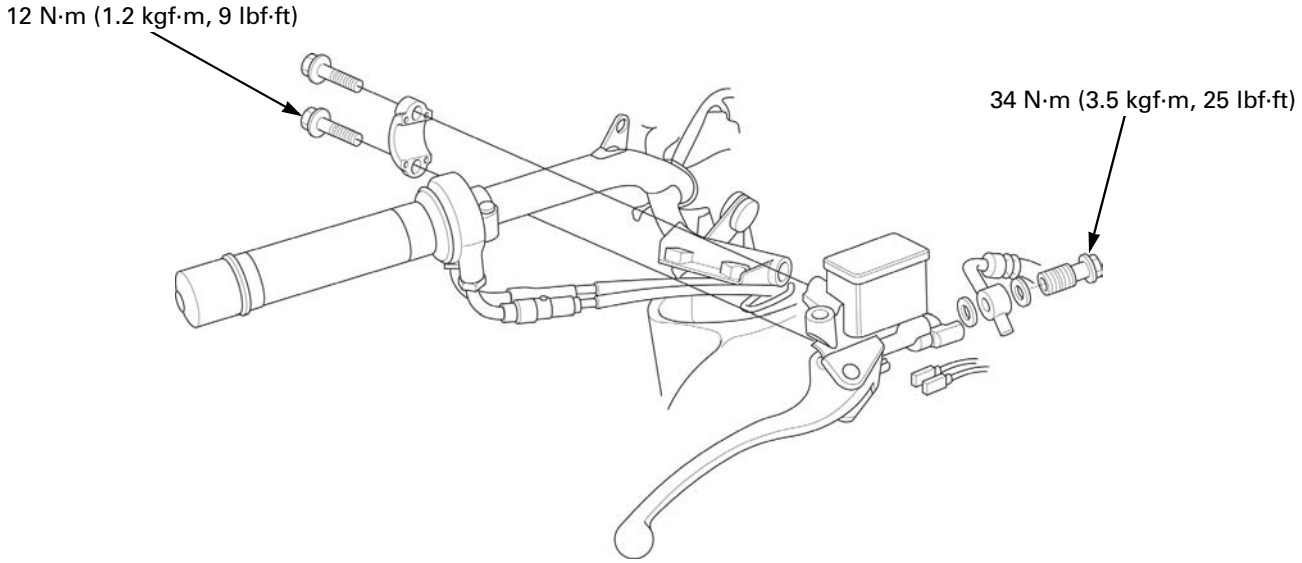

STD type:

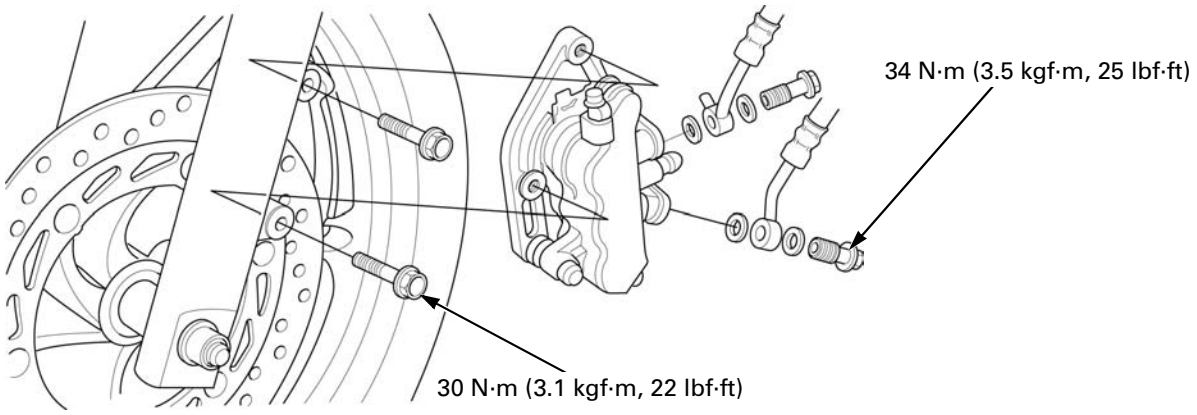

ABS type:

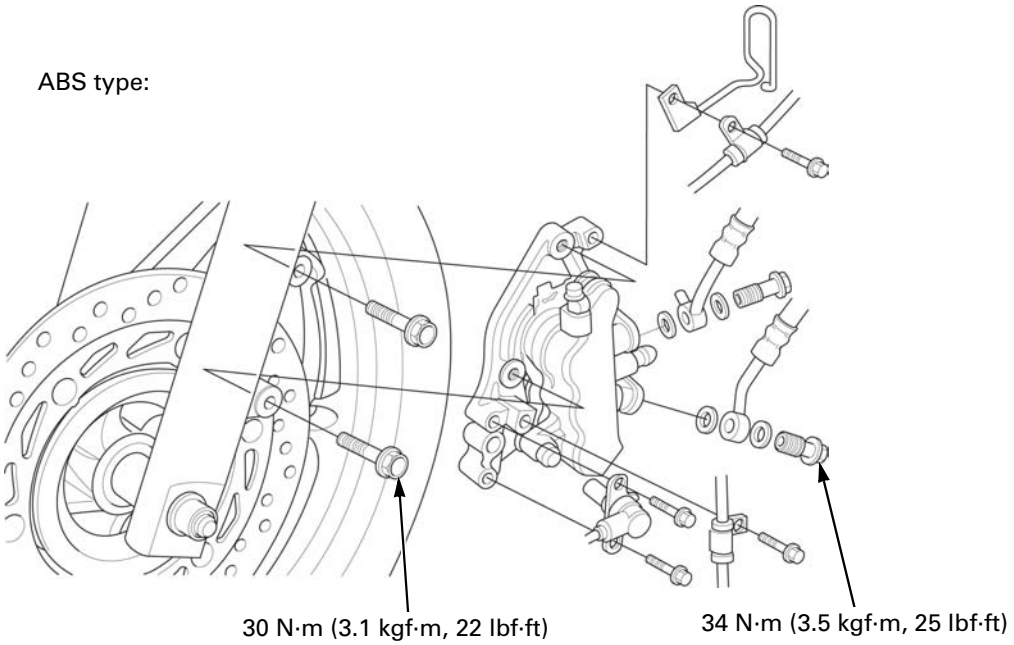

REAR:

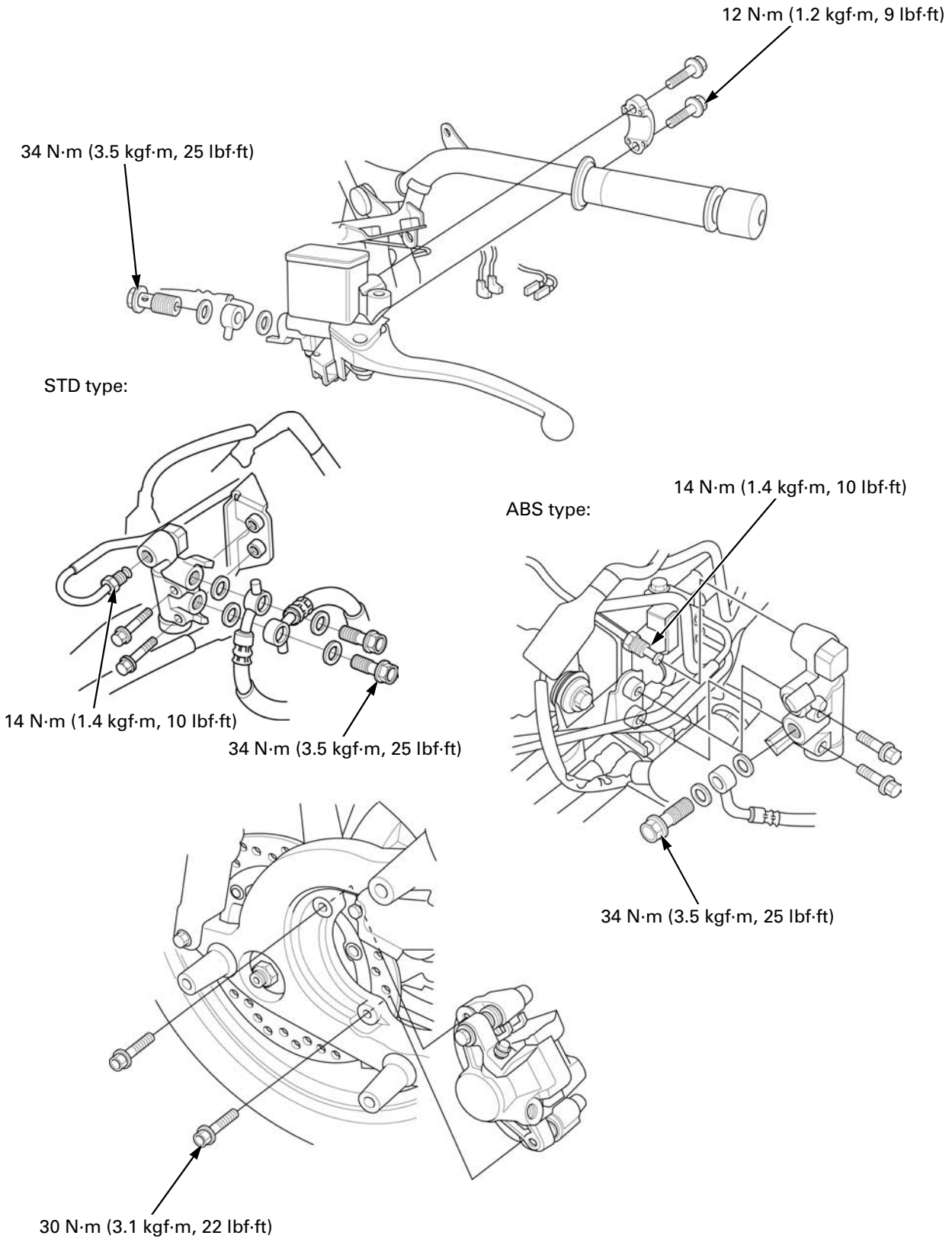
12 N·m (1.2 kgf·m, 9 lbf·ft)
34 N·m (3.5 kgf·m, 25 lbf·ft)
STD type:
14 N·m (1.4 kgf·m, 10 lbf·ft)
34 N·m (3.5 kgf·m, 25 lbf·ft)
ABS type:
14 N·m (1.4 kgf·m, 10 lbf·ft)
34 N·m (3.5 kgf·m, 25 lbf·ft)
30 N·m (3.1 kgf·m, 22 lbf·ft)

SERVICE INFORMATION

GENERAL

⚠ CAUTION

Frequent inhalation of brake pad dust, regardless of material composition, could be hazardous to your health.
- Avoid breathing dust particles.
- Never use an air hose or brush to clean brake assemblies. Use and OSHA-approved vacuum cleaner.

NOTICE

Spilled brake fluid will severely damage instrument lenses and painted surfaces. It is also harmful to same rubber parts. Be careful whenever you remove the reservoir cap; make sure the master cylinder reservoir is horizontal first.

- This model is equipped with a Combined Brake System. The system air bleeding procedure on page 17-7 must be followed.
- A contaminated brake disc or pad reduces stopping power. Discard contaminated pads and clean a contaminated disc with a high quality brake degreasing agent.
- Check the brake system by applying the brake levers after the air bleeding.
- Never allow contaminates (dirt, water, etc.) to get into an open reservoir.
- Once the hydraulic system has been opened, or if the brake feels spongy, the system must be bled.
- Always use fresh DOT 4 brake fluid from a sealed container when servicing the system. Do not mix different types of fluid, they may not be compatible.
- Always check brake operation before riding the scooter.
- This section covers service of the standard brake components (including CBS) of the brake system. page 18-4 for ABS service.
- The brake fluid replacement procedure for the ABS model should be performed in the same manner as in the standard model. Note that there is no brake fluid in the ABS modulator (except in the modulator head), because the modulator is the motor-driven hydraulic pressure type. Therefore, brake fluid replacement and bleeding air from the modulator body is not necessary.

SPECIFICATIONS

Unit: mm (in)

ITEM			STANDARD	SERVICE LIMIT
Front	Specified brake fluid		DOT 4	–
	Brake disc thickness		4.3 – 4.7 (0.17 – 0.19)	3.5 (0.14)
	Brake disc warpage		–	0.25 (0.010)
	Master cylinder I.D.		11.000 – 11.043 (0.4331 – 0.4348)	11.055 (0.4352)
	Master piston O.D.		10.957 – 10.984 (0.4314 – 0.4324)	10.945 (0.4309)
	Caliper cylinder I.D.	Upper	25.400 – 25.450 (1.0000 – 1.0020)	25.460 (1.0024)
		Middle	22.650 – 22.700 (0.8917 – 0.8937)	22.710 (0.8941)
		Lower	25.400 – 25.450 (1.0000 – 1.0020)	25.460 (1.0024)
	Caliper piston O.D.	Upper	25.318 – 25.368 (0.9968 – 0.9987)	25.31 (0.996)
		Middle	22.585 – 22.618 (0.8892 – 0.8905)	22.56 (0.888)
		Lower	25.318 – 25.368 (0.9968 – 0.9987)	25.31 (0.996)
Rear	Specified brake fluid		DOT 4	–
	Brake disc thickness		4.8 – 5.2 (0.19 – 0.20)	4.0 (0.16)
	Brake disc warpage		–	0.25 (0.010)
	Master cylinder I.D.		12.700 – 12.743 (0.5000 – 0.5017)	12.755 (0.5022)
	Master piston O.D.		12.657 – 12.684 (0.4983 – 0.4994)	12.645 (0.4987)
	Caliper cylinder I.D.		38.180 – 38.230 (1.5031 – 1.5051)	38.24 (1.506)
	Caliper piston O.D.		38.098 – 38.148 (1.4999 – 1.5019)	38.09 (1.500)

TORQUE VALUES

Caliper bleed valve	5.4 N·m (0.6 kgf·m, 4.0 lbf·ft)	
Pad pin	17 N·m (1.7 kgf·m, 13 lbf·ft)	
Master cylinder reservoir cap screw	1.5 N·m (0.2 kgf·m, 1.1 lbf·ft)	
Brake hose oil bolt	34 N·m (3.5 kgf·m, 25 lbf·ft)	
Brake pipe joint nut	14 N·m (1.4 kgf·m, 10 lbf·ft)	Apply brake fluid to the threads
Brake lever pivot bolt	1 N·m (0.1 kgf·m, 0.7 lbf·ft)	
Brake lever pivot nut	6 N·m (0.6 kgf·m, 4.4 lbf·ft)	
Brake light switch screw	1.2 N·m (0.1 kgf·m, 0.9 lbf·ft)	
Brake light/inhibitor switch screw	1.2 N·m (0.1 kgf·m, 0.9 lbf·ft)	
Master cylinder holder bolt	12 N·m (1.2 kgf·m, 9 lbf·ft)	
Caliper mounting bolt	30 N·m (3.1 kgf·m, 22 lbf·ft)	ALOC bolt; replace with a new one
Front caliper pin bolt	22 N·m (2.2 kgf·m, 16 lbf·ft)	Apply locking agent to the threads
Front caliper bracket pin bolt	12 N·m (1.2 kgf·m, 9 lbf·ft)	Apply locking agent to the threads
Rear caliper bolt	22 N·m (2.2 kgf·m, 16 lbf·ft)	
Rear caliper pin bolt	22 N·m (2.2 kgf·m, 16 lbf·ft)	Apply locking agent to the threads

TOOL

Snap ring pliers
07914-SA50001

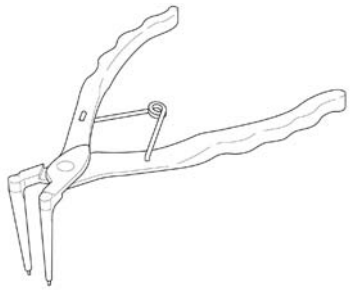

TROUBLESHOOTING

Brake lever soft or spongy
- Air in hydraulic system
- Leaking hydraulic system
- Contaminated brake pad/disc
- Worn caliper piston seal
- Worn master cylinder piston cups
- Worn brake pad/disc
- Contaminated caliper
- Contaminated master cylinder
- Caliper not sliding properly
- Low brake fluid level
- Clogged fluid passage
- Warped/deformed brake disc
- Sticking/worn caliper piston
- Sticking/worn master cylinder piston
- Bent brake lever

Brake lever hard
- Clogged/restricted hydraulic system
- Sticking/worn caliper piston
- Caliper not sliding properly
- Worn caliper piston seal
- Sticking/worn master cylinder piston
- Bent brake lever

Brake drags
- Contaminated brake pad/disc
- Misaligned wheel
- Badly worn brake pad/disc
- Warped/deformed brake disc
- Caliper not sliding properly
- Clogged/restricted brake hydraulic system
- Clogged/restricted fluid passage
- Clogged master cylinder port
- Sticking caliper piston

BRAKE FLUID REPLACEMENT/AIR BLEEDING

NOTICE

Spilled fluid can damage painted, plastic, or rubber parts. Place a rag over these parts whenever the system is serviced.

- Do not allow foreign material to enter the system when filling the reservoir.
- When using a commercially available brake bleeder, follow the manufacturer's operating instructions.

BRAKE FLUID DRAINING

FRONT BRAKE LINE

Remove the following:

– front upper cover (page 3-9)
– front handlebar cover (page 3-14)

Support the scooter on its centerstand and turn the handlebar until the reservoir is parallel to the ground, before removing the reservoir cap.

Remove the screws, reservoir cap, diaphragm plate and diaphragm from the front master cylinder.

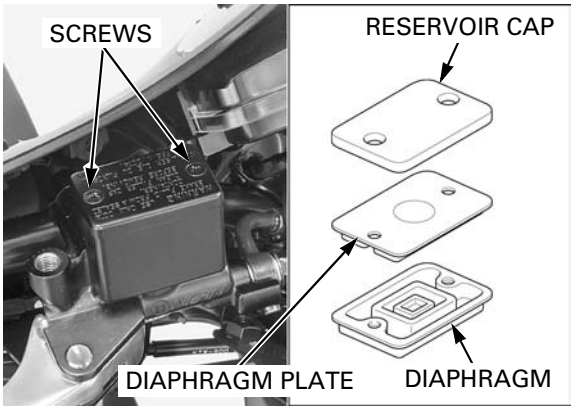

Connect a commercially available brake bleeder to the front brake caliper upper bleed valve.

Loosen the upper bleed valve and operate the air bleed tool.
Drain the brake fluid.

Tighten the front caliper upper bleed valve.

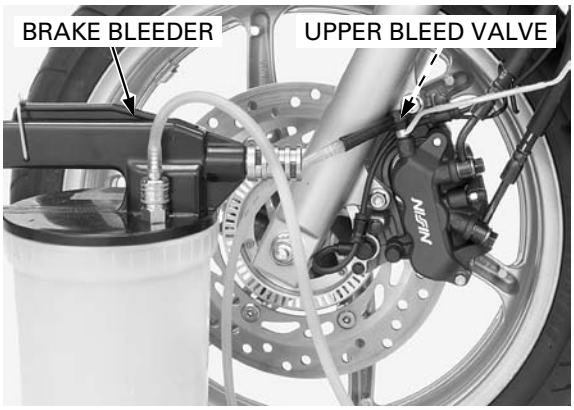

REAR (COMBINED) BRAKE LINE

Remove the following:

– front upper cover (page 3-9)
– front handlebar cover (page 3-14)
– exhaust pipe/muffler (page 3-15)

Support the scooter on its centerstand and turn the handlebar until the reservoir is parallel to the ground, before removing the reservoir cap.

Remove the screws, reservoir cap, diaphragm plate and diaphragm from the rear master cylinder.

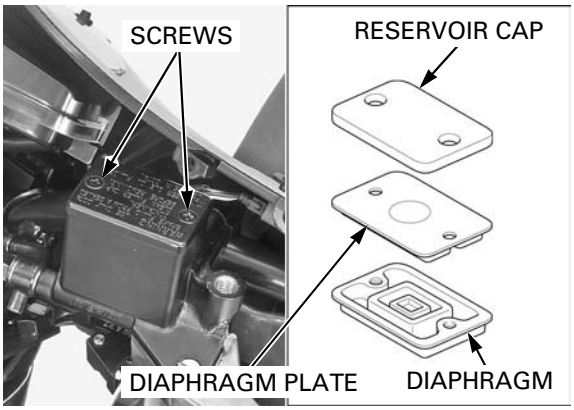

Connect a commercially available brake bleeder to the front brake caliper lower bleed valve.

Loosen the lower bleed valve and operate the air bleed tool.
Drain the brake fluid.

Tighten the front caliper lower bleed valve.

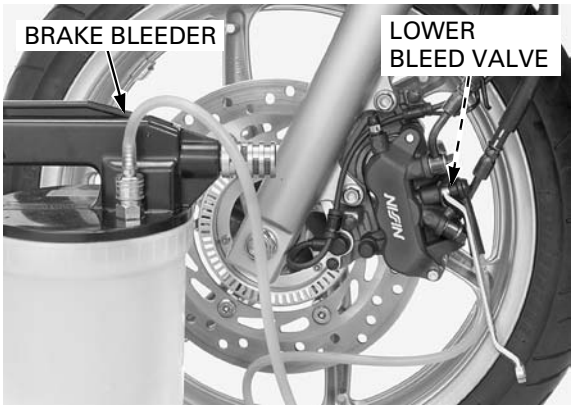

Connect a bleed hose to the rear brake caliper bleed valve.

Loosen the bleed valve and operate a air bleed tool.
Drain the brake fluid.

Tighten the rear caliper bleed valve.

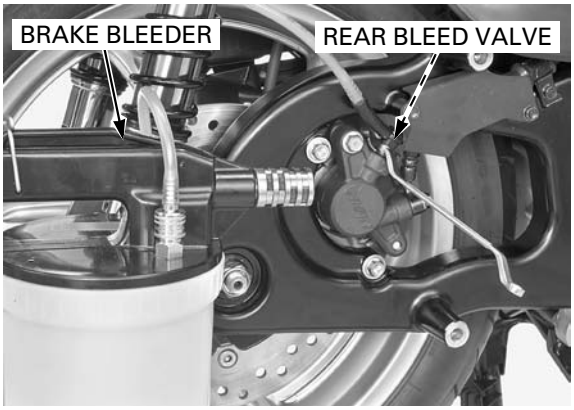

FRONT BRAKE FLUID FILLING/AIR BLEEDING

- Use only DOT 4 brake fluid from a sealed container.
- Do not mix different types of fluid. They are not compatible.

Fill the reservoir with DOT 4 brake fluid from a sealed container.

Connect a commercially available brake bleeder to the front caliper upper bleed valve.
Operate the brake bleeder and loosen the upper bleed valve.
If an automatic refill system is not used, add brake fluid when the fluid level in the reservoir is low.

- Check the fluid level often while bleeding to prevent air from being pumped into the system.
- When using a brake bleeding tool, follow the manufacturer's operating instructions.
- If air is entering the bleeder from around the bleed valve threads, seal the threads with teflon tape.

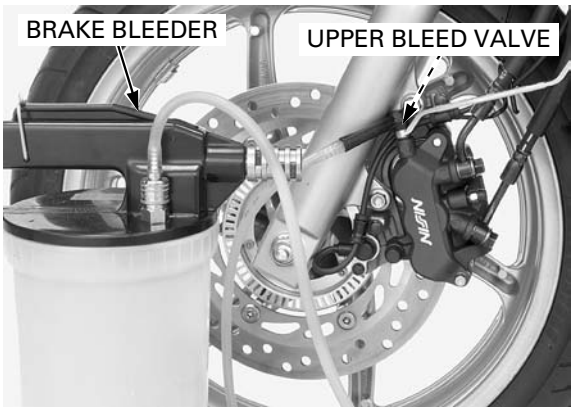

Close the bleed valve.

Perform the bleeding procedure until the system is completely flushed/bled.

After bleeding air, operate the front brake lever. If it still feels spongy, bleed the system again.

After bleeding air completely, tighten the front brake caliper upper bleed valve to the specified torque.

TORQUE: 5.4 N·m (0.6 kgf·m, 4.0 lbf·ft)

If the brake bleeder is not available, perform the following procedure:

Fill the reservoir with DOT 4 brake fluid from a sealed container.

Check the fluid level often while bleeding the brakes to prevent air from being pumped into the system.

Operate the front brake lever several times to bleed air from the master cylinder.

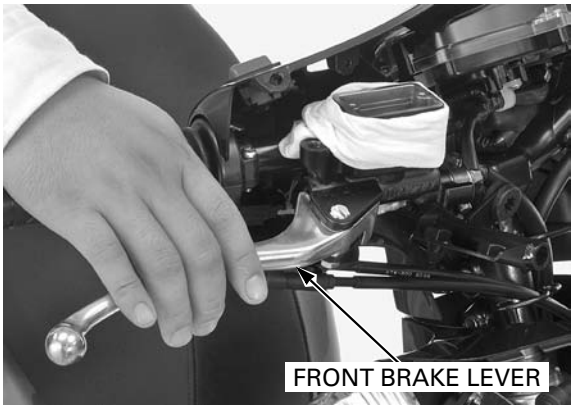

Connect a bleed hose to the front caliper upper bleed valve and bleed the system as follows:

Do not release the brake lever until the bleed valve has been closed.

1. Pump the front brake lever several (5-10) times, then squeeze the front brake lever all way and loosen the bleed valve 1/4 of a turn. Wait several seconds and then close the bleed valve.
2. Release the front brake lever slowly and wait several seconds after it reaches the end of its travel.
3. Repeat steps 1 and 2 until there are no air bubbles in the bleed hose.

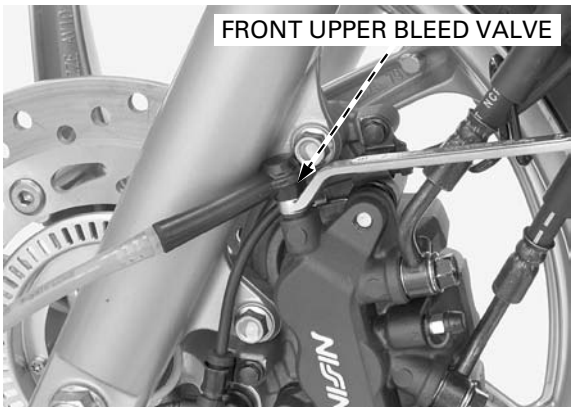

After bleeding air completely, tighten the front brake caliper upper bleed valve to the specified torque.

TORQUE: 5.4 N·m (0.6 kgf·m, 4.0 lbf·ft)

Fill the reservoir with DOT 4 brake fluid to the upper level.

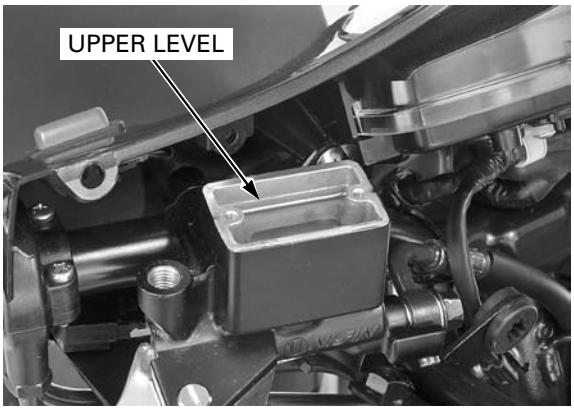

Install the diaphragm and diaphragm plate.

Install the reservoir cap and tighten the screws to the specified torque.

TORQUE: 1.5 N·m (0.2 kgf·m, 1.1 lbf·ft)

Install the following:

– front handlebar cover (page 3-14)
– front upper cover (page 3-9)

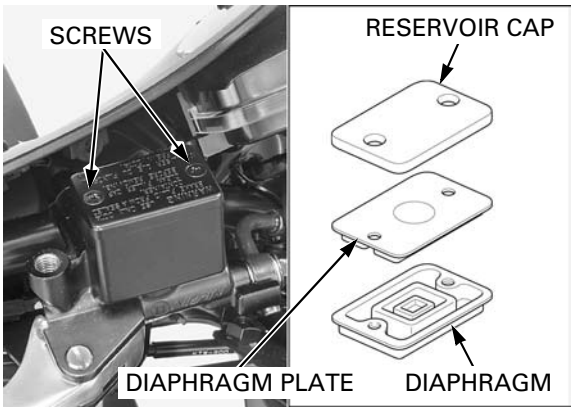

REAR (COMBINED) BRAKE FLUID FILLING/AIR BLEEDING

- Use only DOT 4 brake fluid from a sealed container.
- Do not mix different types of fluid. There are not compatible.

BRAKE FLUID FEEDING

Fill the reservoir with DOT 4 brake fluid from a sealed container.

Connect a commercially available brake bleeder to the front caliper lower bleed valve.

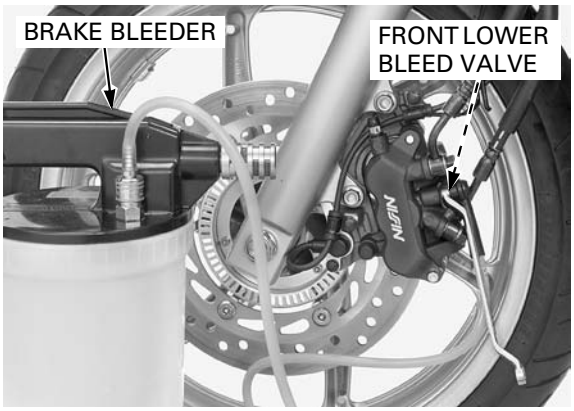

- Check the fluid level often while bleeding to prevent air from being pumped into the system.
- When using a brake bleeding tool, follow the manufacturer's operating instructions.
- If air is entering the bleeder from around the bleed valve threads, seal the threads with teflon tape.
- It is not a problem if the fluid flowing out of the bleed valve contains air bubbles because the lines will be bled in later steps ("Air Bleeding").

1. Operate the brake bleeder and loosen the bleed valve.

   If an automatic refill system is not used, add fluid when the fluid level in the reservoir is low.

2. Perform above feeding procedure until sufficient amount of the fluid flows out of the caliper bleed valve.

   Close the bleed valve.

Connect a commercially available brake bleeder to the rear caliper bleed valve.
Repeat step 1 and 2 for rear caliper bleed valve.

Next perform the air bleeding without using a brake bleeder tool.

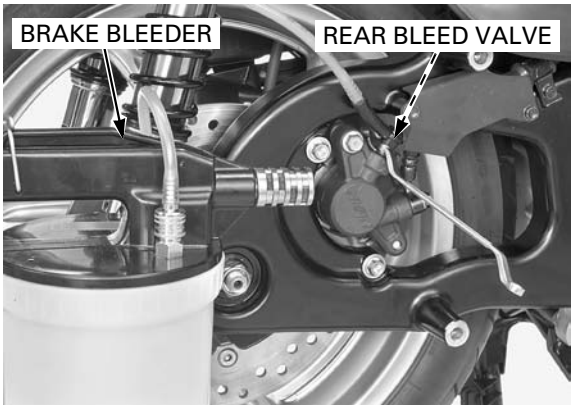

If the brake bleeder is not available, perform the following procedure:

Fill the reservoir with DOT 4 brake fluid from a sealed container.

Check the fluid level often while bleeding the brakes to prevent air from being pumped into the system.

Operate the rear brake lever several times to bleed air from the master cylinder.

Connect a bleed hose to the bleed valve and bleed the system as follows:

Do not release the brake lever until the bleed valve has been closed.

1. Pump the rear brake lever several (5-10) times, then squeeze the rear brake lever all the way and loosen the bleed valve 1/4 of a turn. Wait several seconds and then close the bleed valve.
2. Release the rear brake lever slowly until the breed valve has been closed.
3. Repeat the steps 1 and 2 until fluid flows out from the bleed valve.

- It is not a problem if the fluid flowing out from the lower bleed valve contains air bubbles because the lines will be bled in later steps.

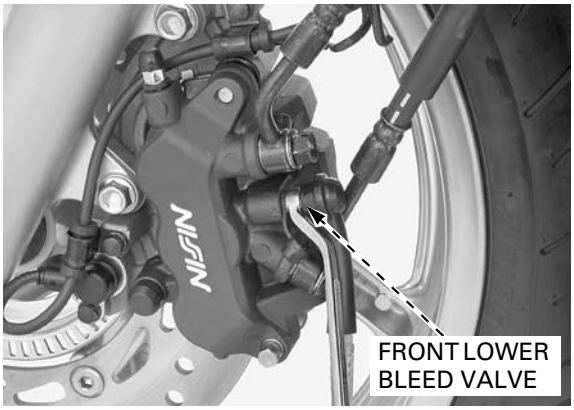

Connect a bleed hose to the rear caliper bleed valve.

Repeat step for rear caliper bleed valve.

Next perform the air bleeding from the system.

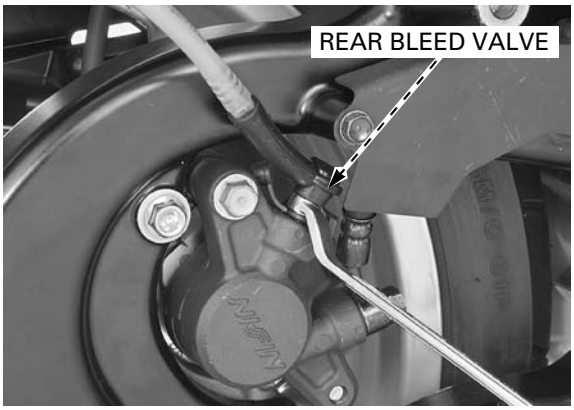

AIR BLEEDING

Connect a bleed hose to the rear caliper bleed valve and bleed the system as follows:

Do not release the brake lever until the bleed valve has been closed.

1. Pump the rear brake lever several (5-10) times, then squeeze the rear brake lever all the way and loosen the bleed valve 1/4 of a turn. Wait several seconds and then close the bleed valve.
2. Release the rear brake lever slowly until the breed valve has been closed.
3. Repeat the steps 1 and 2 until there are no air bubbles in the bleed hose.

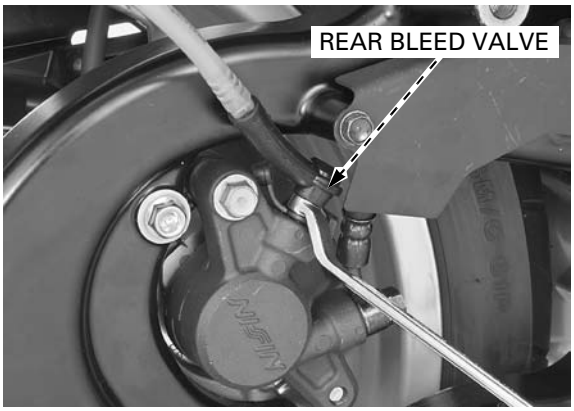

Connect a bleed hose to the front caliper lower bleed valve.

Repeat step 1 and 3 for front caliper bleed valve.

- Note that you may feel strong resistance on the rear (combined) brake lever during pumping to bleed air from the caliper. This symptom is caused by the delay valve function. Be sure to push the rear brake lever fully in by this point.

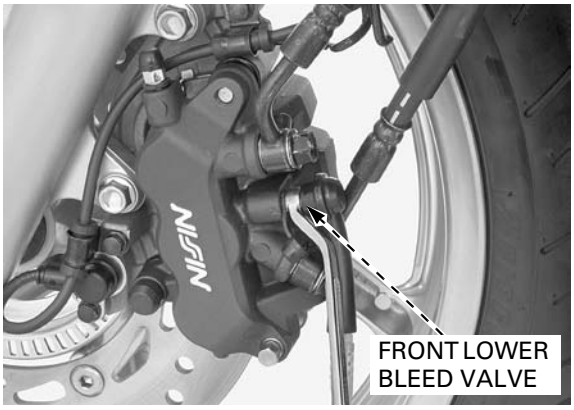

After air bubbles cease to appear in the fluid, repeat air bleeding procedure about 2 – 3 times at each bleed valve.

Make sure the bleed valves are closed and operate the rear brake lever.
If it still feels spongy, bleed the system again.

After the bleeding air completely, tighten the bleed valves to the specified torque.

TORQUE: 5.4 N·m (0.6 kgf·m, 4.0 lbf·ft)

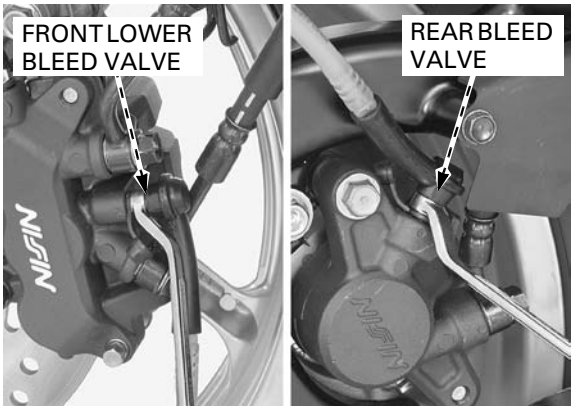

Fill the reservoir with DOT 4 brake fluid to the upper level.

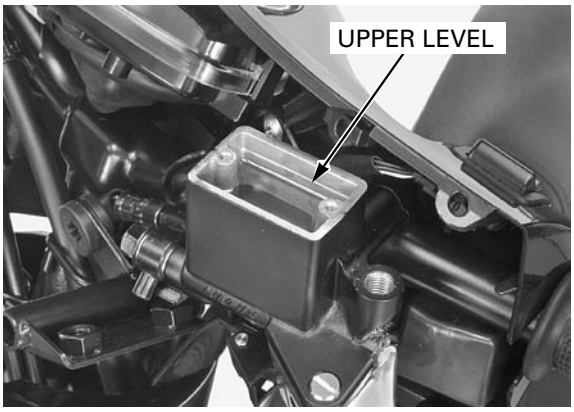

Install the diaphragm and diaphragm plate.

Install the reservoir cap and tighten the screws to the specified torque.

TORQUE: 1.5 N·m (0.2 kgf·m, 1.1 lbf·ft)

Install the following:

– exhaust pipe/muffler (page 3-15)
– front handlebar cover (page 3-14)
– front upper cover (page 3-9)

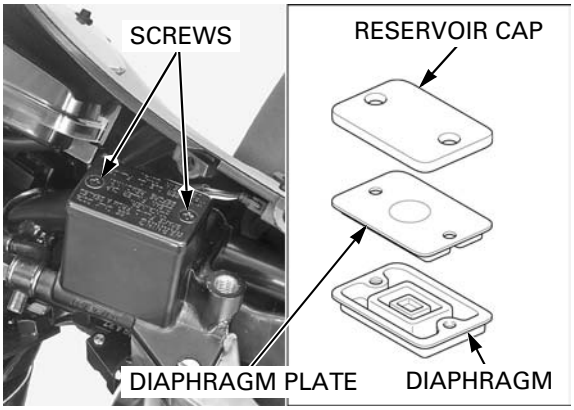

BRAKE PAD/DISC

BRAKE PAD REPLACEMENT

FRONT

Check the fluid level in the master cylinder reservoir as this operation causes the fluid level to rise.

Push the caliper pistons all the way in to allow installation of new brake pads.

Loosen the pad pin.
Pull the pad pin out of the caliper body while pushing in the pads against the pad spring.
Remove the brake pads.

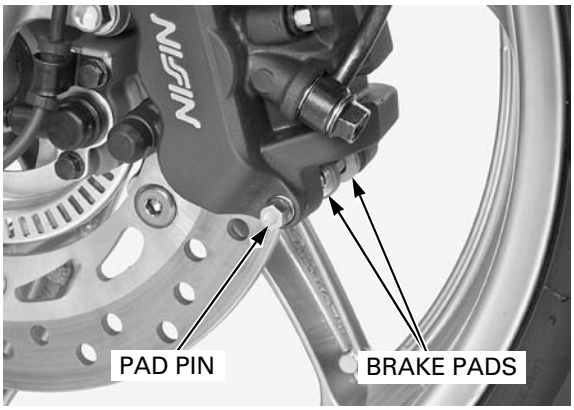

Make sure the pad spring is installed correctly.

Always replace the brake pads in pairs to ensure even disc pressure.

Install new brake pads so that their ends are set in the pad retainer on the caliper bracket properly.

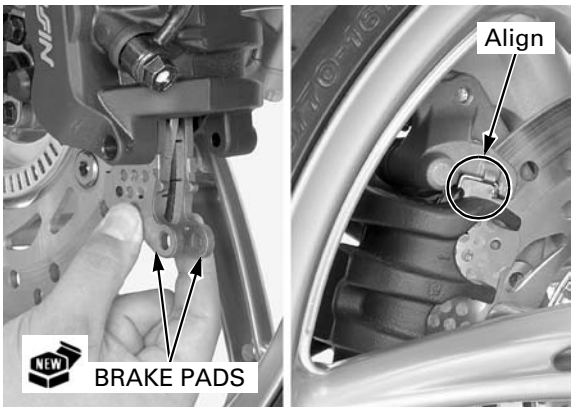

Apply silicone grease to the pad pin stopper ring outer surface.

Install the pad pin by pushing the pads against the pad spring to align the pad pin holes in the pads and caliper body.

Tighten the pad pin to the specified torque.

TORQUE: 17 N·m (1.7 kgf·m, 13 lbf·ft)

Operate the front/rear brake lever to seat the caliper pistons against the pads.

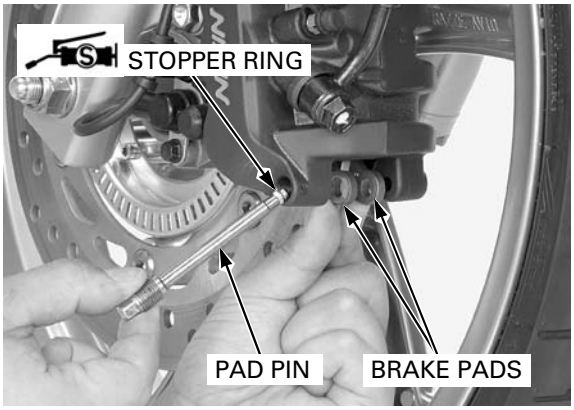

REAR

Remove the following:

- exhaust pipe/muffler (page 3-15)
- brake hose protector (page 16-5)

Check the fluid level in the master cylinder reservoir as this operation causes the fluid level to rise.

Push the caliper piston all the way in to allow installation of new brake pads.

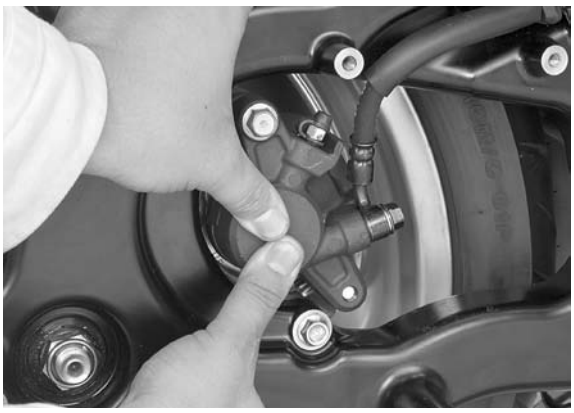

Remove the rear caliper mounting bolts and rear brake caliper from the swingarm.

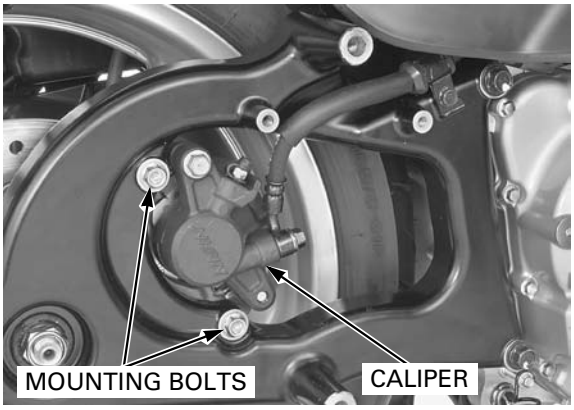

Hold the rear caliper pin and remove the rear caliper bolt.

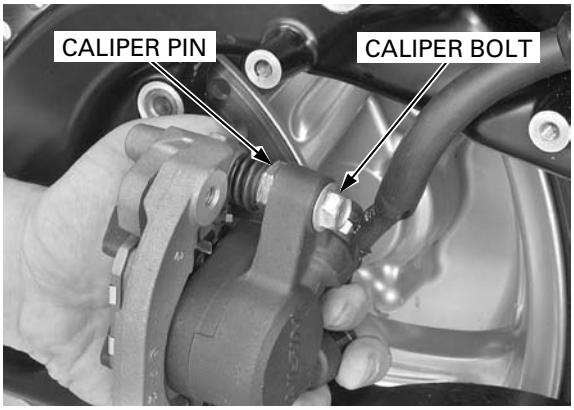

Remove the brake pads.

Clean the inside of the caliper especially around the caliper piston.

Always replace the brake pads in pairs to ensure even disc pressure.

Install new pads so that their ends are set in the pad retainers on the caliper bracket properly.

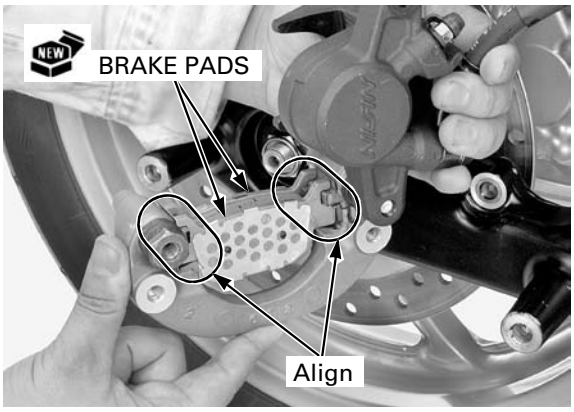

Hold the rear caliper pin and tighten the rear caliper bolt to the specified torque.

TORQUE: 22 N·m (2.2 kgf·m, 16 lbf·ft)

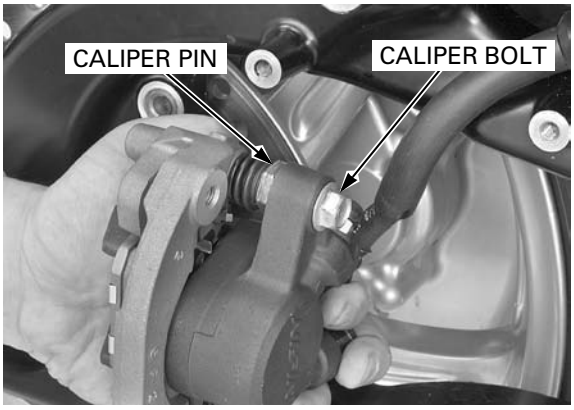

Install the caliper to the swingarm so that the disc is positioned between the pads, being careful not to damage the pads.

Install the new brake caliper mounting bolts and tighten them to the specified torque.

TORQUE: 30 N·m (3.1 kgf·m, 22 lbf·ft)

Operate the rear brake lever to seat the caliper piston against the pads.

Install the following:

– brake hose protector (page 16-11)
– exhaust pipe/muffler (page 3-15)

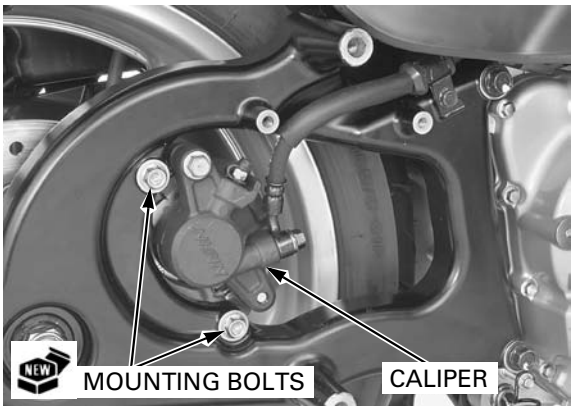

BRAKE DISC INSPECTION

Visually inspect the brake disc for damage or cracks.

Measure the brake disc thickness at several points.

SERVICE LIMITS:
FRONT: 3.5 mm (0.14 in)
REAR: 4.0 mm (0.16 in)

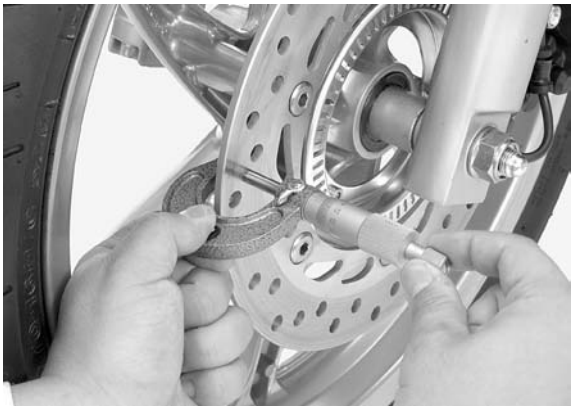

Measure the brake disc warpage with a dial indicator.

SERVICE LIMITS:
FRONT: 0.25 mm (0.010 in)
REAR: 0.25 mm (0.010 in)

Check the bearing for excessive play, if the warpage exceeds the service limit.
Replace the brake disc if the bearings are normal.

For front brake disc replacement, refer to page 15-8.
For rear brake disc replacement, refer to page 16-7.

FRONT MASTER CYLINDER

REMOVAL

Remove the following:

- front upper cover (page 3-9)
- front handlebar cover (page 3-14)
- rear handlebar cover (page 3-14)

Drain the brake fluid from the front brake line hydraulic system (page 17-7).

When removing the oil bolt, cover the end of the hose to prevent contamination.

Remove the oil bolt and sealing washers.

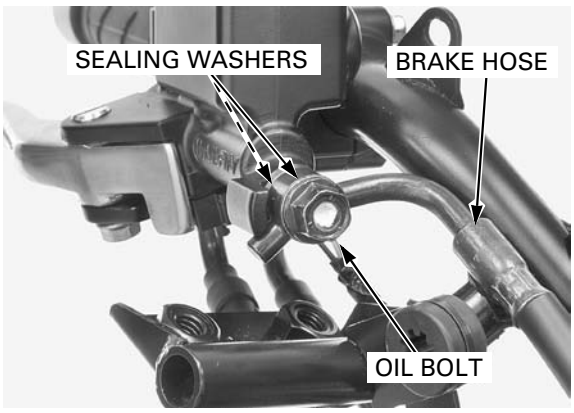

Disconnect the front brake light switch connectors.

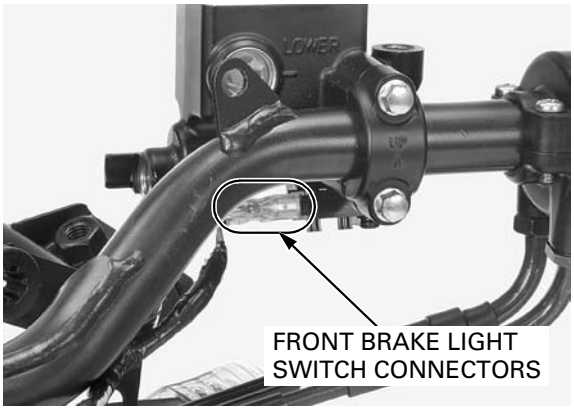

Remove the bolts, holder and front master cylinder.

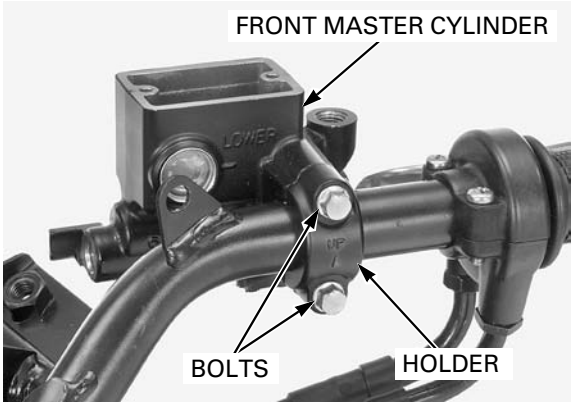

DISASSEMBLY

Remove the following:

- pivot nut
- pivot bolt
- brake lever

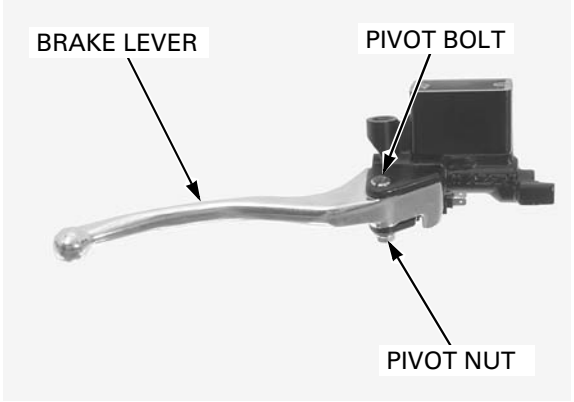

– screw
– brake light switch

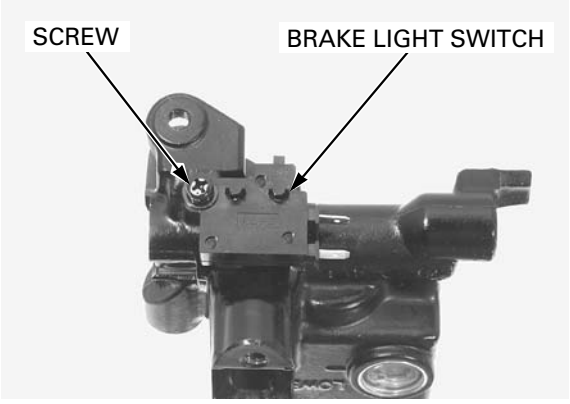

– piston boot
– snap ring/washer

TOOL:
Snap ring pliers **07914-SA50001**

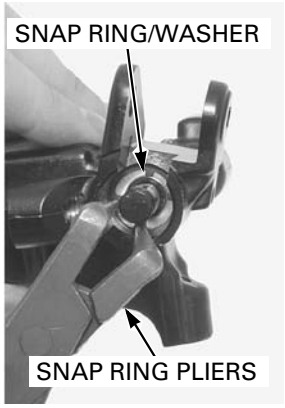

– master piston
– spring

Clean the master cylinder, reservoir and master piston in clean brake fluid.

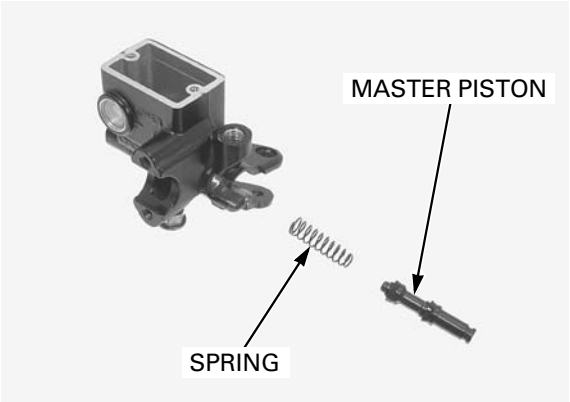

INSPECTION

Check the piston cups for wear, deterioration or damage.
Check the spring for fatigue or damage.
Check the master cylinder and piston for scoring, scratches or damage.

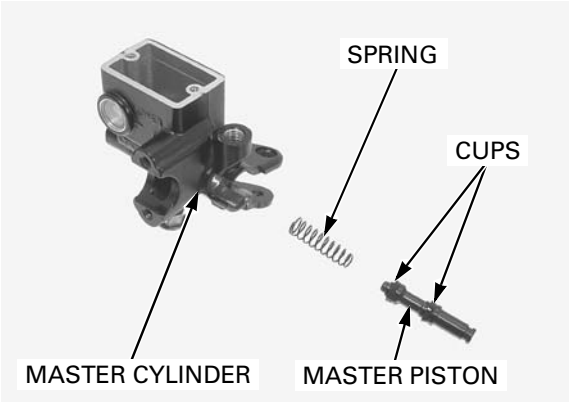

Measure the master cylinder I.D.

SERVICE LIMIT: 11.055 mm (0.4352 in)

Measure the master cylinder piston O.D.

SERVICE LIMIT: 10.945 mm (0.4309 in)

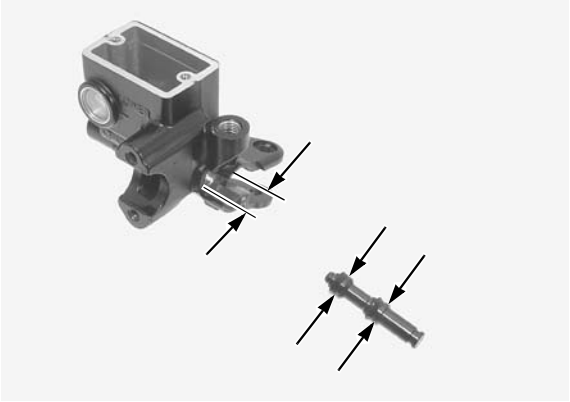

ASSEMBLY

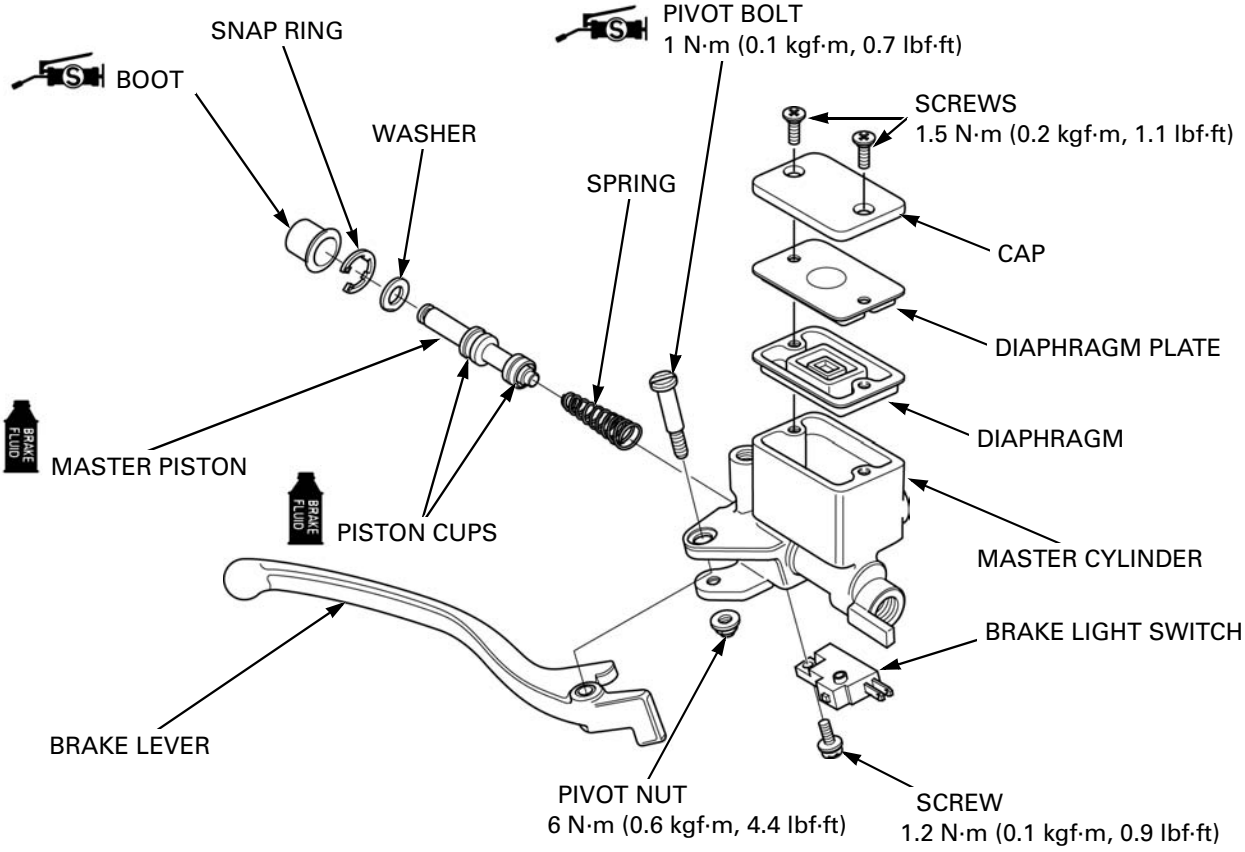

- Replace the piston, spring, cups, snap ring and boot as a set.

Coat the master piston and piston cups with clean DOT 4 brake fluid.

Install the spring onto the master piston.

Do not allow the piston cup lips to turn inside out.

Install the spring and master piston into the master cylinder.

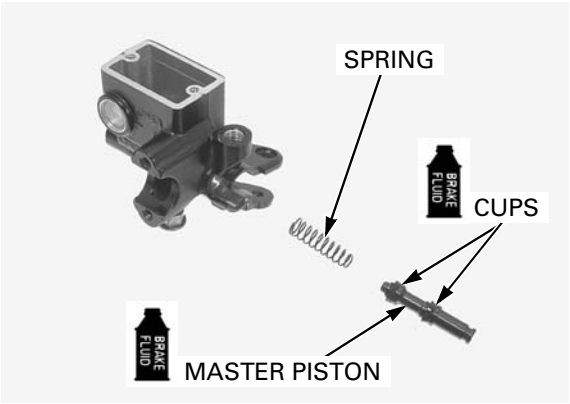

Install the washer and snap ring into the groove in the master cylinder.

TOOL:
Snap ring pliers 07914-SA50001

- Install the snap ring with the chamfered edges facing the thrust load side.
- Check that the snap ring is seated in the grooves.

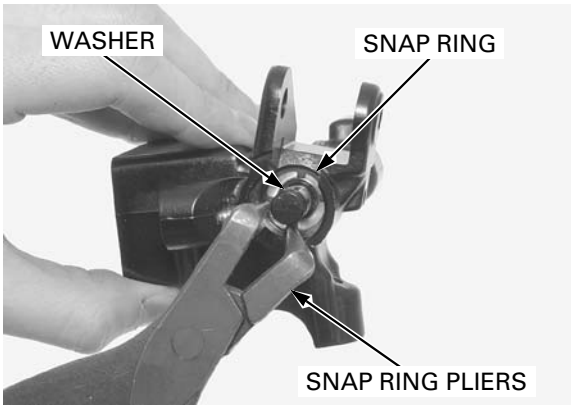

Apply silicone grease to the piston boot inner surface.

Install the piston boot into the master cylinder and the piston groove.

Instal the brake light switch by aligning the boss of the switch body and hole of the master cylinder.
Install and tighten the screw to the specified torque.

TORQUE: 1.2 N·m (0.1 kgf·m, 0.9 lbf·ft)

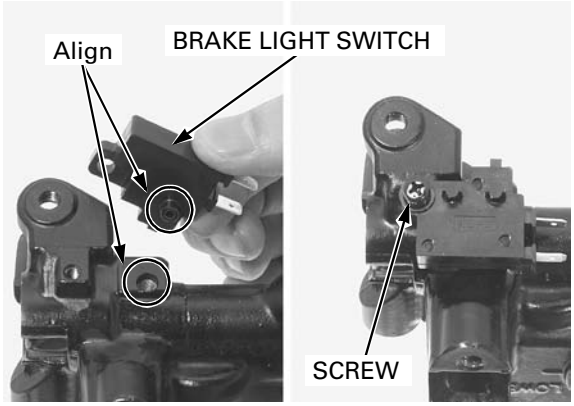

Apply 0.1 g of silicone grease to the contact surfaces of the brake lever, piston tip and brake lever pivot bolt sliding surface.
Install the brake lever.

Install the pivot bolt and tighten it to the specified torque.

TORQUE: 1 N·m (0.1 kgf·m, 0.7 lbf·ft)

Install the pivot nut and tighten it to the specified torque.

TORQUE: 6 N·m (0.6 kgf·m, 4.4 lbf·ft)

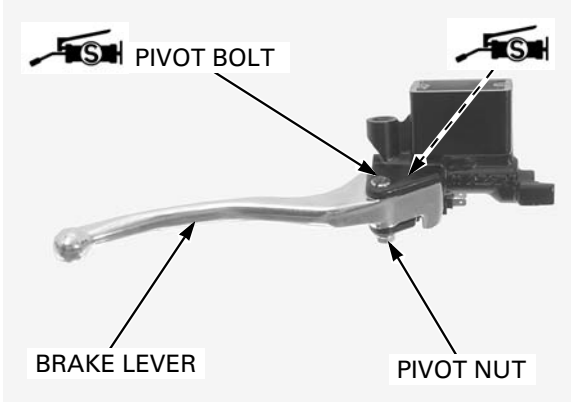

INSTALLATION

Install the master cylinder and the holder with the "UP" mark facing up.

Align the edge of the master cylinder with the punch mark on the handlebar and tighten the upper bolt first, then tighten the lower bolt to the specified torque.

TORQUE: 12 N·m (1.2 kgf·m, 9 lbf·ft)

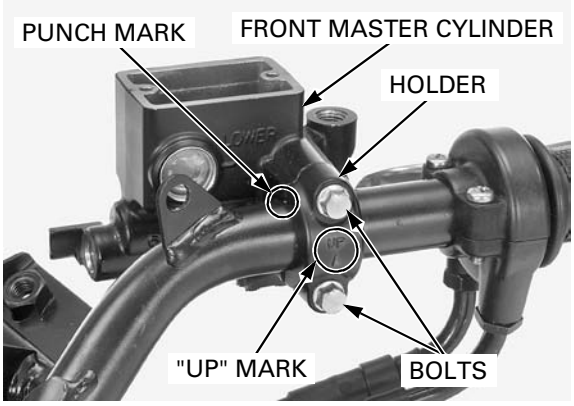

Connect the brake light switch connectors.

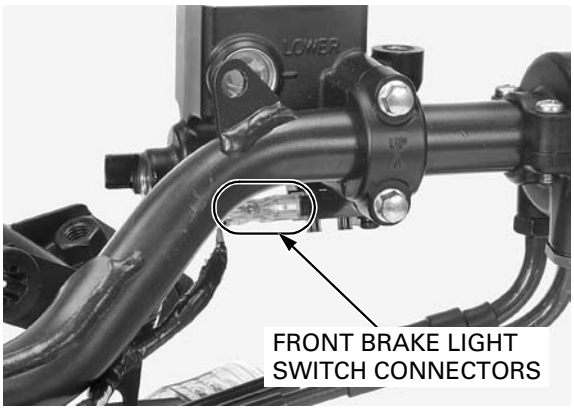

Connect the brake hose to the master cylinder with the oil bolt and new sealing washers.
Tighten the brake hose oil bolt to the specified torque while setting the hose joint against the stopper on the master cylinder.

TORQUE: 34 N·m (3.5 kgf·m, 25 lbf·ft)

Fill brake fluid and bleed air the front brake line hydraulic system (page 17-8).

Install the following:

- front upper cover (page 3-9)
- front handlebar cover (page 3-14)
- rear handlebar cover (page 3-14)

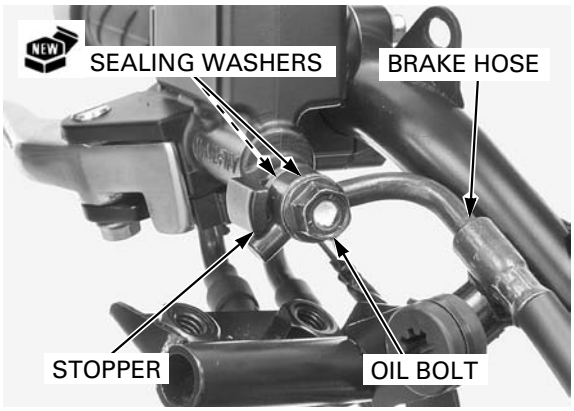

REAR MASTER CYLINDER

REMOVAL

Remove the following:

- front upper cover (page 3-9)
- front handlebar cover (page 3-14)
- rear handlebar cover (page 3-14)

Drain the brake fluid from the rear (combined) brake line hydraulic system (page 17-7).

When removing the oil bolt, cover the end of the hose to prevent contamination.

Remove the oil bolt and sealing washers.

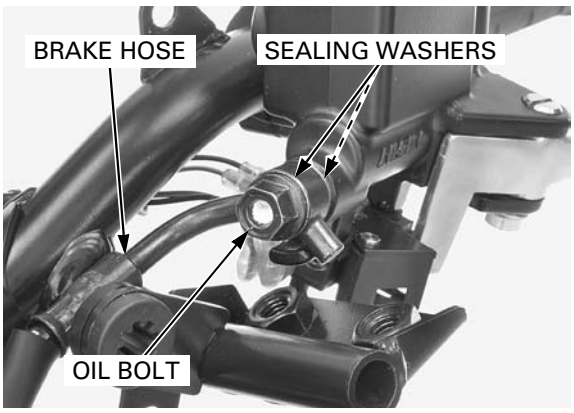

Disconnect the inhibitor switch and rear brake light switch connectors.

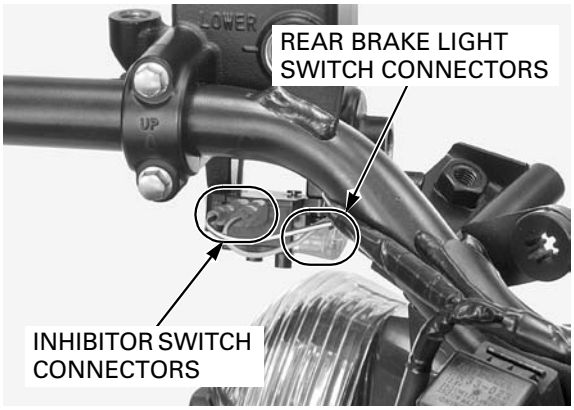

Remove the bolts, holder and rear master cylinder.

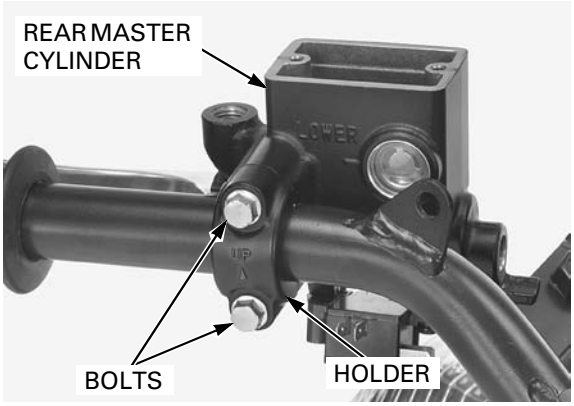

DISASSEMBLY

Remove the following:

- pivot nut
- pivot bolt
- brake lever

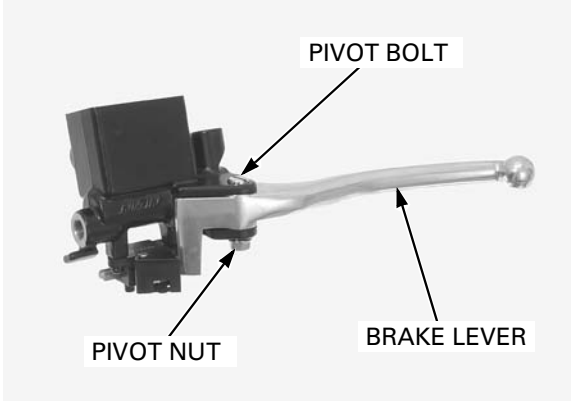

– two screw
– brake light/inhibitor switch

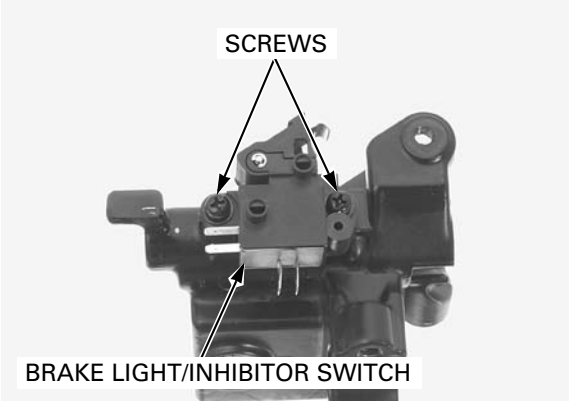

– piston boot
– snap ring

TOOL:
Snap ring pliers **07914-SA50001**

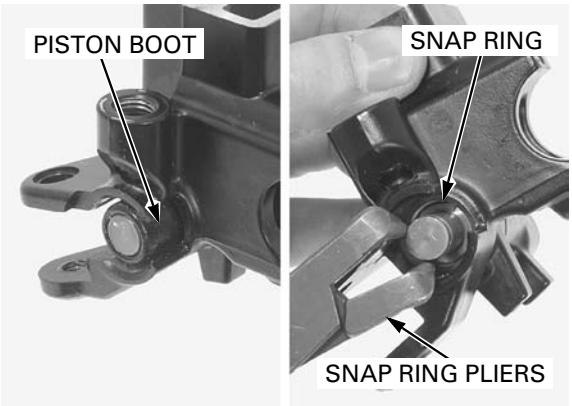

– master piston
– piston cup
– spring

Clean the inside of the cylinder and reservoir with clean brake fluid.

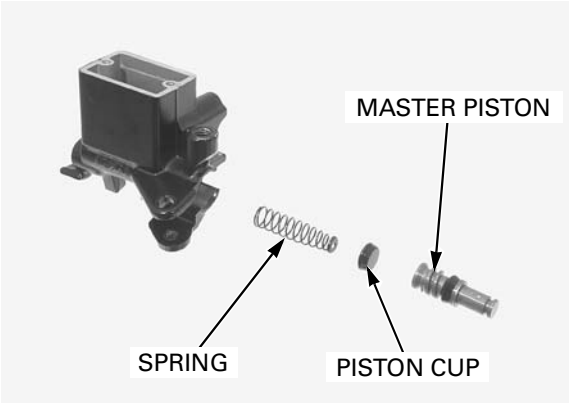

INSPECTION

Check the piston cups for wear, deterioration or damage.
Check the spring for fatigue or damage.
Check the master cylinder and piston for scoring, scratches or damage.

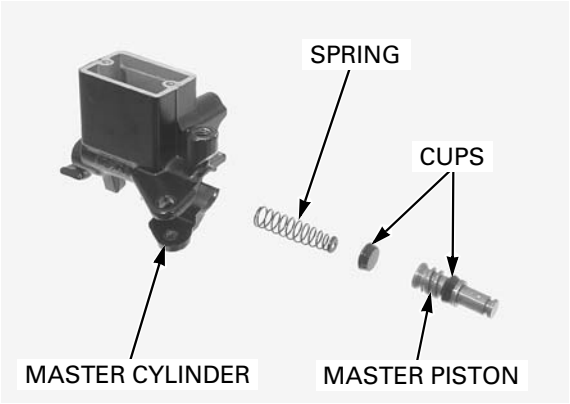

Measure the master cylinder I.D.

SERVICE LIMIT: 12.755 mm (0.5022 in)

Measure the master cylinder piston O.D.

SERVICE LIMIT: 12.645 mm (0.4987 in)

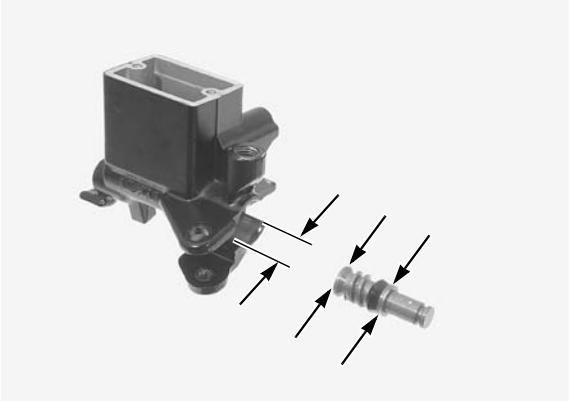

ASSEMBLY

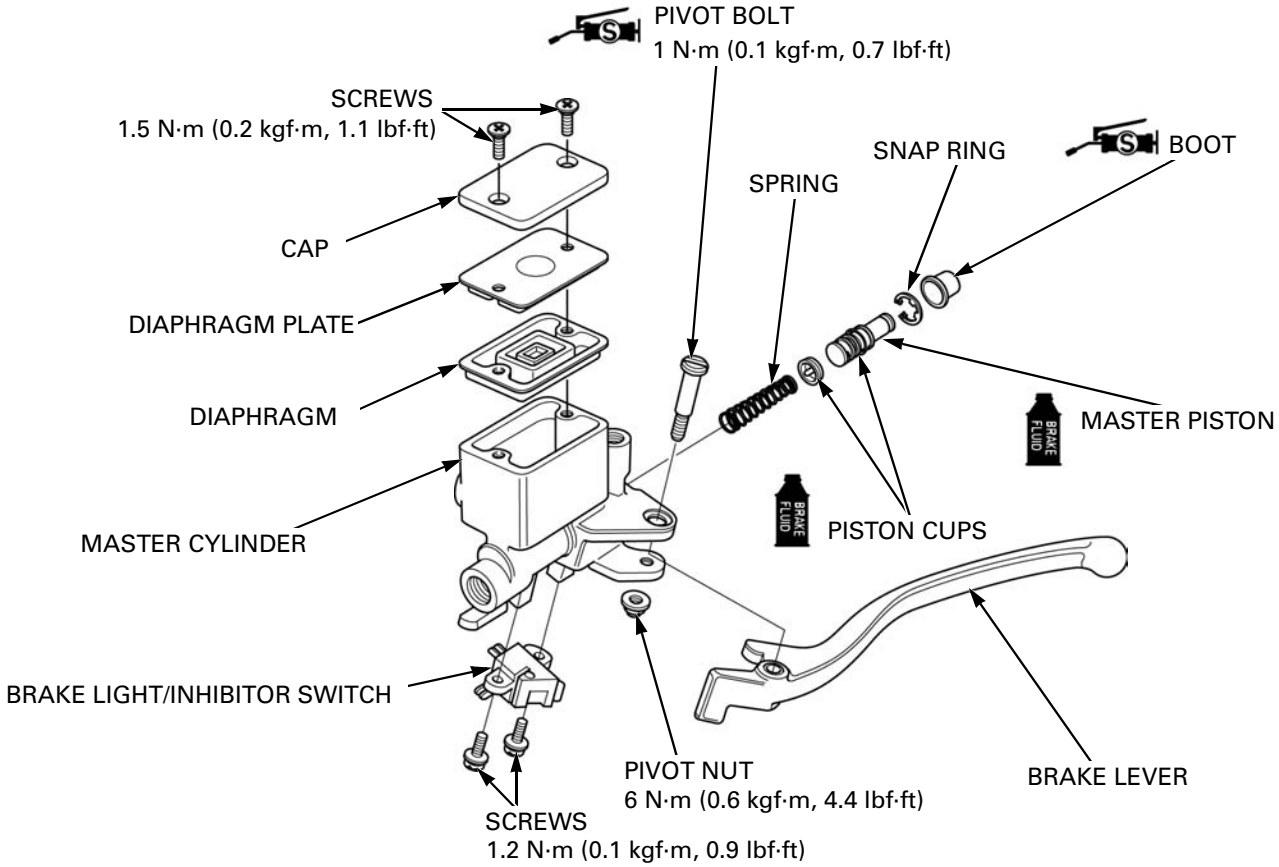

- Replace the piston, spring, cups, snap ring and boot as a set.

Coat the master piston and piston cups with clean DOT 4 brake fluid.

Install the spring onto the piston cup.

Do not allow the piston cup lips to turn inside out.

Install the spring and master piston into the master cylinder.

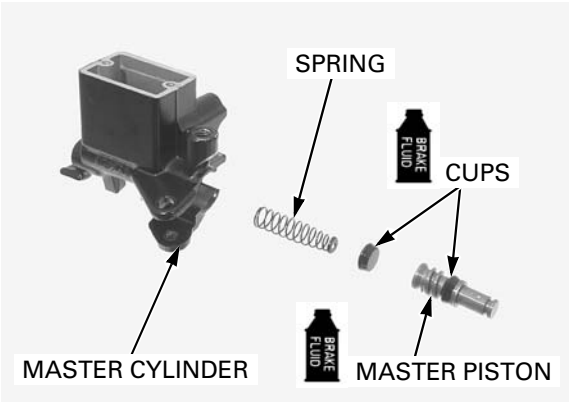

Install the snap ring into the groove in the master cylinder.

TOOL:
Snap ring pliers 07914-SA50001

- Install the snap ring with the chamfered edges facing the thrust load side.
- Check that the snap ring is seated in the grooves.

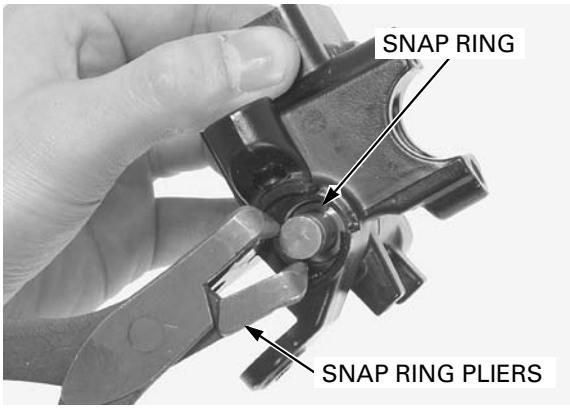

Apply silicone grease to the piston boot inner surface.

Install the piston boot into the master cylinder and the groove in the piston.

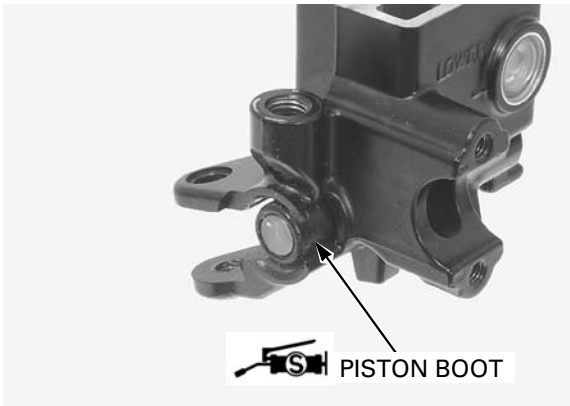

Instal the brake light/inhibitor switch and tighten the screws to the specified torque.

TORQUE: 1.2 N·m (0.1 kgf·m, 0.9 lbf·ft)

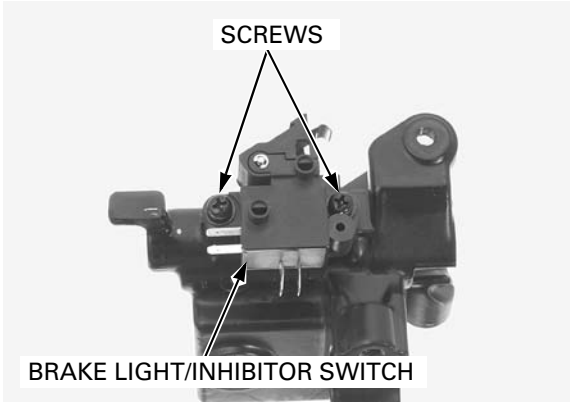

Apply 0.1 g of silicone grease to the contact surfaces of the brake lever, piston tip and brake lever pivot bolt sliding surface.
Install the brake lever.

Install the pivot bolt and tighten it to the specified torque.

TORQUE: 1 N·m (0.1 kgf·m, 0.7 lbf·ft)

Install the pivot nut and tighten it to the specified torque.

TORQUE: 6 N·m (0.6 kgf·m, 4.4 lbf·ft)

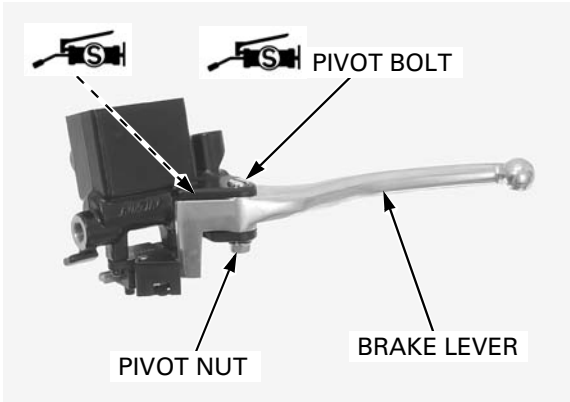

INSTALLATION

Install the master cylinder and the holder with the "UP" mark facing up.

Align the edge of the master cylinder with the punch mark on the handlebar and tighten the upper bolt first, then tighten the lower bolt.

TORQUE: 12 N·m (1.2 kgf·m, 9 lbf·ft)

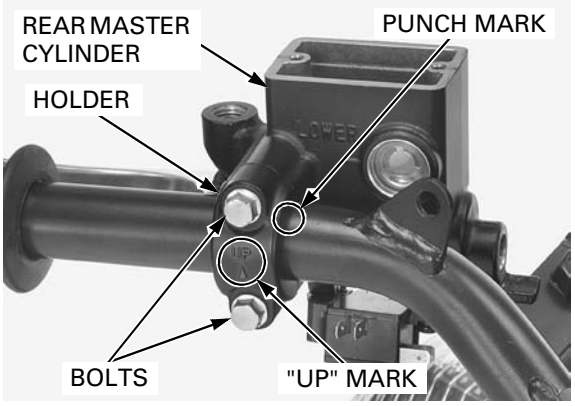

Connect the brake light switch and inhibitor switch connectors.

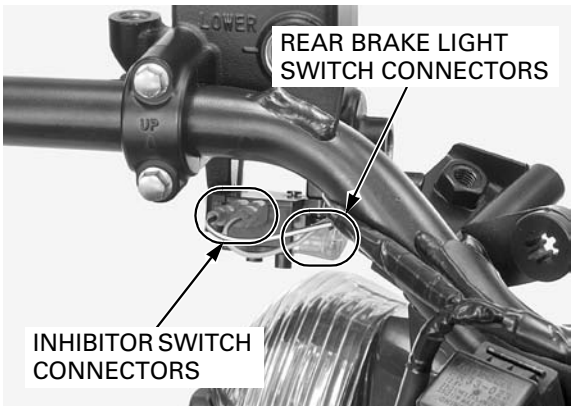

Connect the brake hose to the master cylinder with the oil bolt and new sealing washers.
Tighten the brake hose oil bolt to the specified torque while setting the hose joint against the stopper on the master cylinder.

TORQUE: 34 N·m (3.5 kgf·m, 25 lbf·ft)

Fill brake fluid and bleed air the rear (combined) brake line hydraulic system (page 17-10).

Install the following:

- front upper cover (page 3-9)
- front handlebar cover (page 3-14)
- rear handlebar cover (page 3-14)

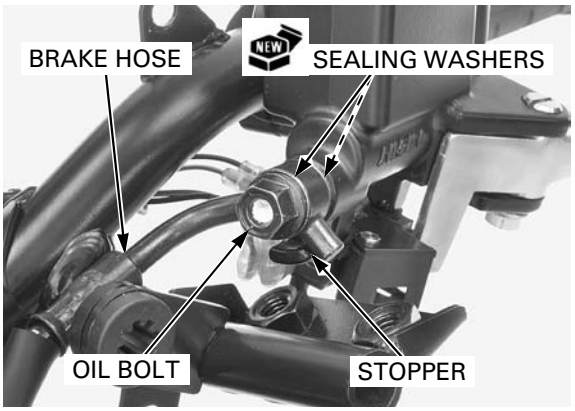

DELAY VALVE (STD TYPE)

REMOVAL

Remove the front upper cover (page 3-9).

Drain the brake fluid from the hydraulic system (page 17-7).

Be careful not to damage the brake pipe.

Loosen the joint nut and disconnect the brake pipe from the delay valve.

When removing the brake pipe joint nuts, cover the end of the pipes to prevent contamination.

Remove the oil bolts, sealing washers and disconnect the brake hoses.

Remove the delay valve mounting bolts and delay valve.

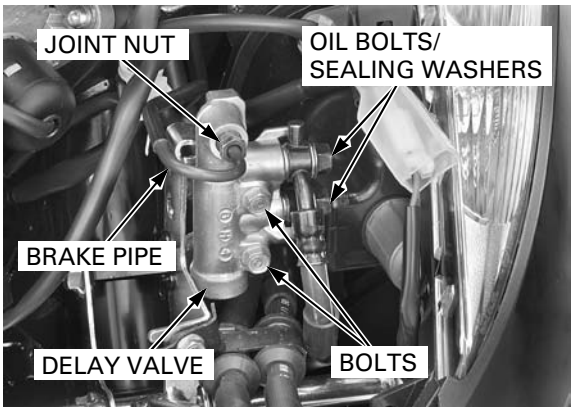

INSTALLATION

Install the delay valve and tighten the delay valve mounting bolts.

Connect the brake hoses to the delay valve with the oil bolts and new sealing washers.
Tighten the brake hose oil bolts to the specified torque while setting the hose joints against the stoppers on the delay valve.

TORQUE: 34 N·m (3.5 kgf·m, 25 lbf·ft)

Apply clean brake fluid to the brake pipe joint nut thread.

Install the brake pipe to the delay valve and tighten the joint nut to the specified torque.

TORQUE: 14 N·m (1.4 kgf·m, 10 lbf·ft)

Fill brake fluid and bleed air the hydraulic system (page 17-7).

Install the front upper cover (page 3-9).

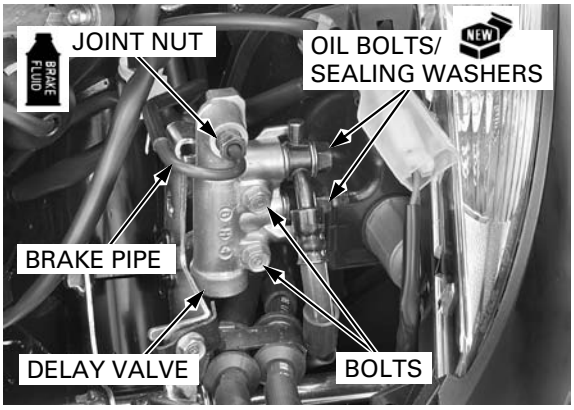

DELAY VALVE (ABS TYPE)

REMOVAL

Remove the following:

- front upper cover (page 3-9)
- front handlebar cover (page 3-14)
- rear handlebar cover (page 3-14)
- front inner cover (page 3-10)

Drain the brake fluid from the hydraulic system (page 17-7).

Be careful not to damage the brake pipe.
When removing the brake pipe joint nuts, cover the end of the pipes to prevent contamination.

Loosen the joint nut and disconnect the brake pipe from the delay valve.

Remove the oil bolt, sealing washers and disconnect the brake hose.

Remove the delay valve mounting bolts and delay valve.

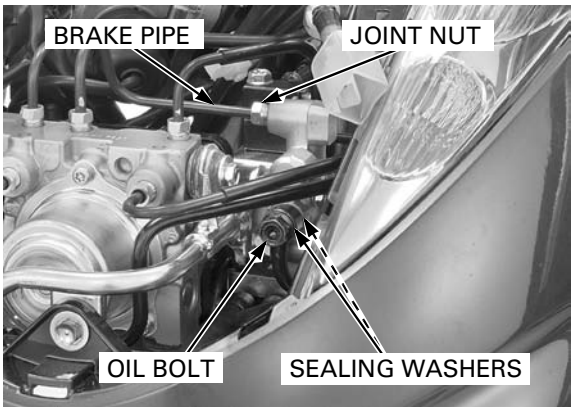

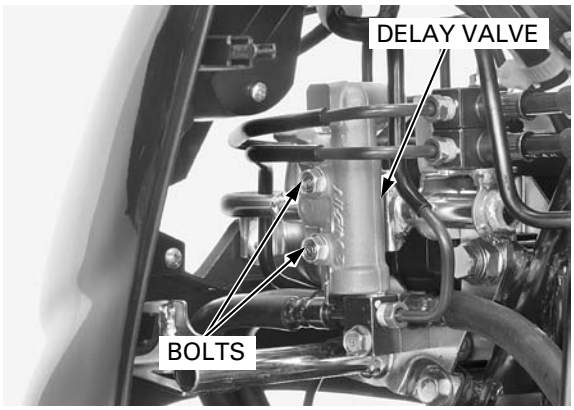

INSTALLATION

Install the delay valve and tighten the delay valve mounting bolts.

Connect the brake hose to the delay valve with the oil bolt and new sealing washers.
Tighten the brake hose oil bolt to the specified torque while setting the hose joint against the stopper on the delay valve.

TORQUE: 34 N·m (3.5 kgf·m, 25 lbf·ft)

Apply clean brake fluid to the brake pipe joint nut thread.

Install the brake pipe to the delay valve and tighten the joint nut to the specified torque.

TORQUE: 14 N·m (1.4 kgf·m, 10 lbf·ft)

Fill brake fluid and bleed air the hydraulic system (page 17-7).

Install the following:

- front inner cover (page 3-10)
- rear handlebar cover (page 3-14)
- front handlebar cover (page 3-14)
- front upper cover (page 3-9)

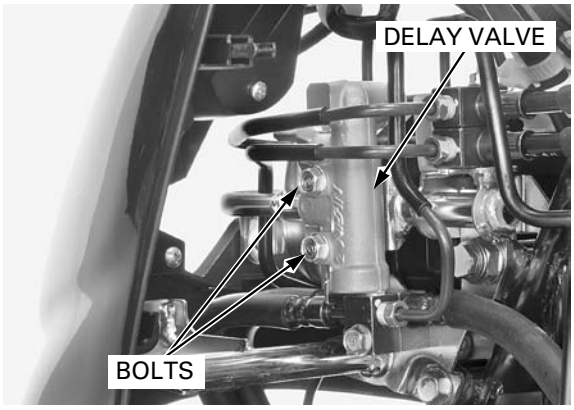

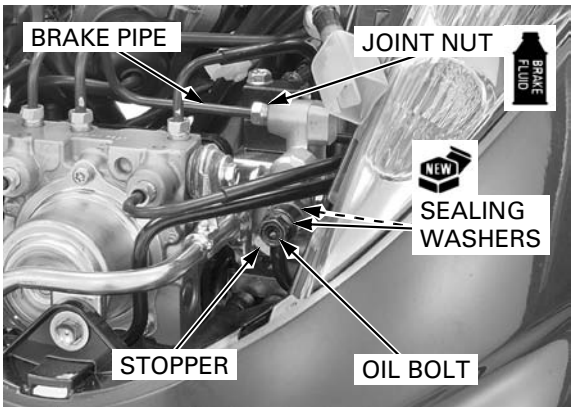

FRONT BRAKE CALIPER

REMOVE

Drain the brake fluid from the hydraulic system (page 17-7).

Remove the following:

ABS type only.
- two wire clamp bolts
- wire guide

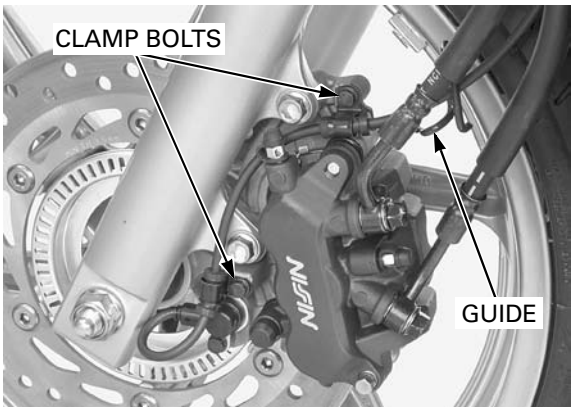

ABS type only.
- two bolts
- wheel speed sensor

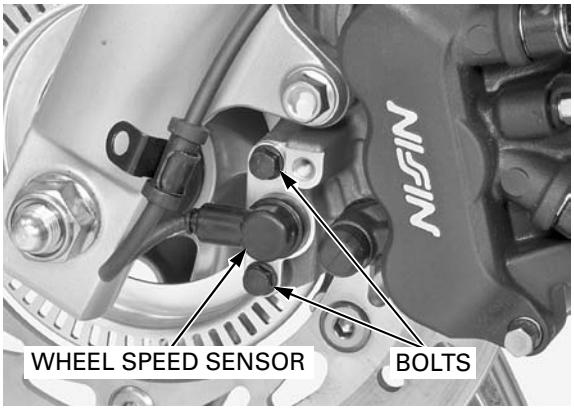

When removing the oil bolts, cover the end of the hoses to prevent contamination.

Disconnect the brake hoses from the brake caliper by removing the oil bolts and sealing washers.

Remove the following:

– brake pads (page 17-13)

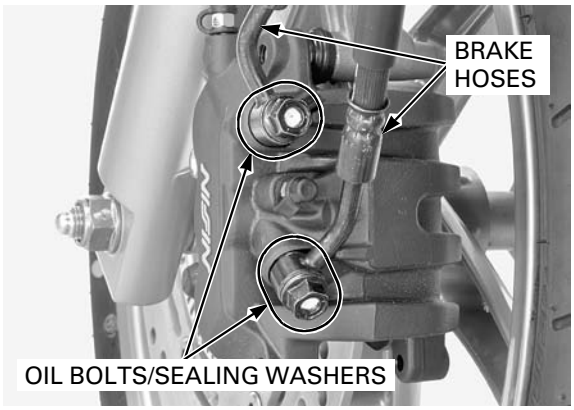

– two mounting bolts
– brake caliper

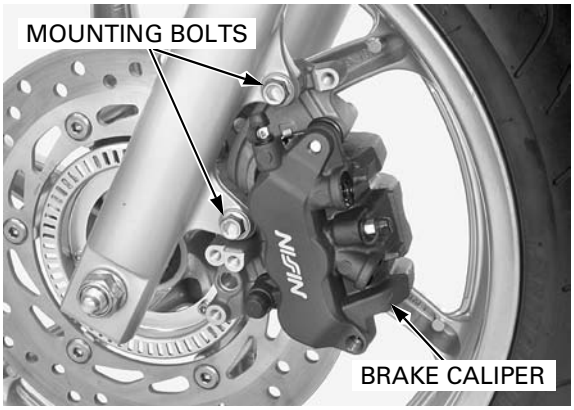

DISASSEMBLY

Remove the caliper bracket from the caliper body.

Remove the following from the caliper bracket:

– bracket pin boot
– pad retainer

Remove the following from the caliper body:

– caliper pin boot
– pad spring

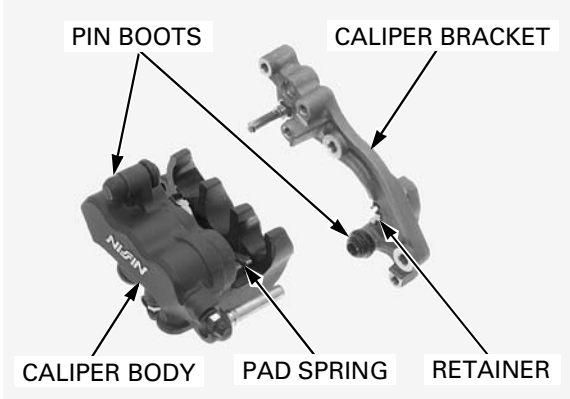

Place a shop towel over the pistons.

Do not use high pressure air or bring the nozzle too close the inlet.

Position the caliper body with the pistons down and apply small squirts of air pressure to the fluid inlet to remove the three pistons.

Be careful not to damage the piston sliding surface.

Push the dust and piston seals in and lift them out.

Clean the seal grooves, caliper cylinders and pistons with clean brake fluid.

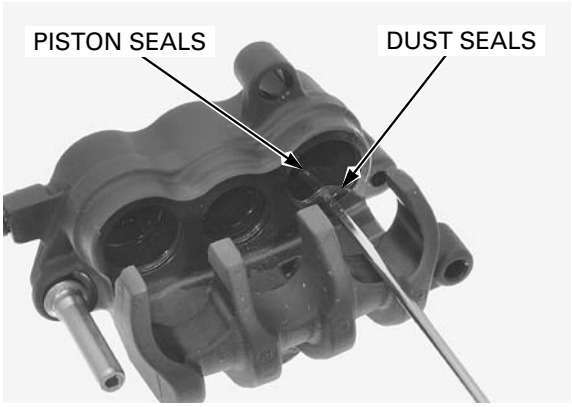

INSPECTION

Check the caliper cylinder for scoring or other damage.

Measure the caliper cylinder I.D.

SERVICE LIMITS:

Upper:	**25.460 mm (1.0024 in)**
Middle:	**22.710 mm (0.8941 in)**
Lower:	**25.460 mm (1.0024 in)**

Check the caliper pistons for scratches, scoring or other damage.

Measure the caliper piston O.D.

SERVICE LIMITS:

Upper:	**25.31 mm (0.996 in)**
Middle:	**22.56 mm (0.888 in)**
Lower:	**25.31 mm (0.996 in)**

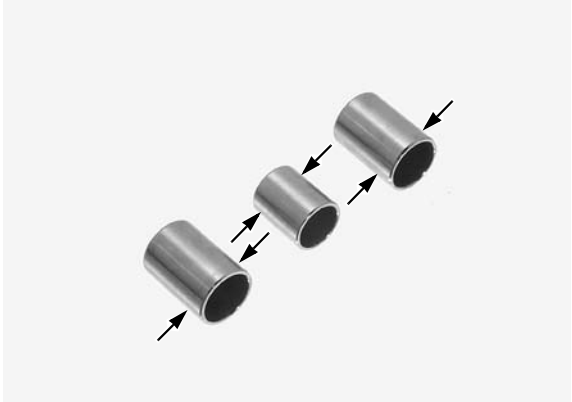

ASSEMBLY

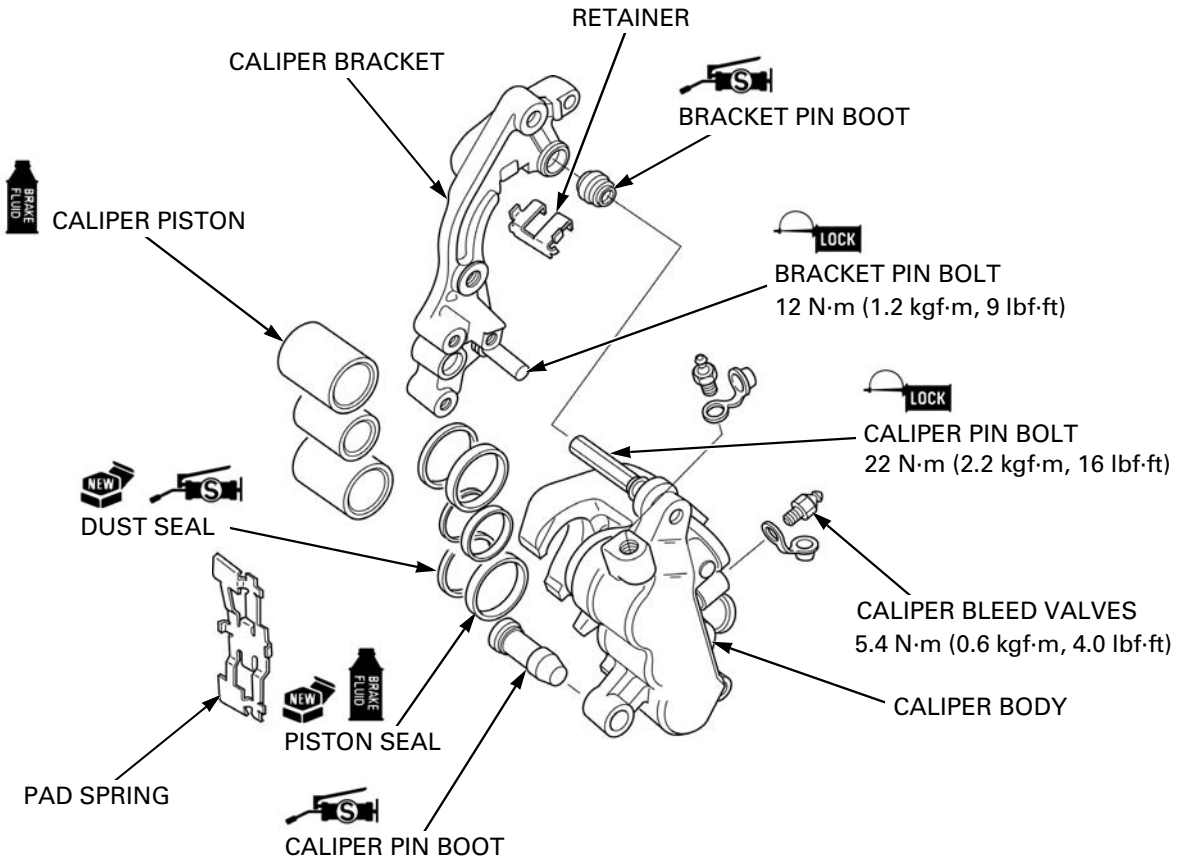

Coat new piston seals with clean brake fluid, new dust seals with silicone grease and install them into the seal grooves in the caliper cylinder.

Coat the caliper pistons with clean brake fluid and install them into the caliper cylinders with the opening sides toward the pads.

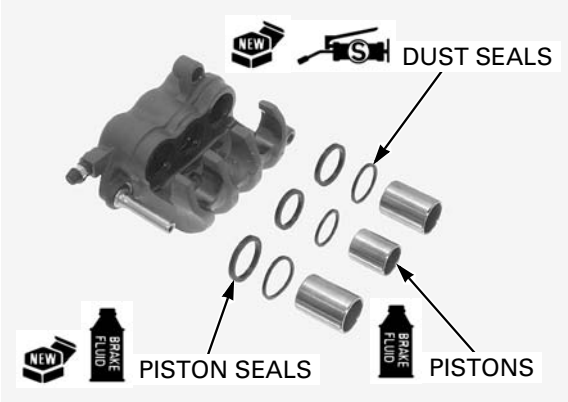

Check the caliper/bracket pin boots and replace them if they are hard, deteriorated or damaged.

Install the pad spring onto the caliper body as shown.

Apply 0.4 g minimum of silicone grease to the caliper/bracket pin boots, and install them into the caliper body and bracket.

Install the caliper bracket to the caliper body.

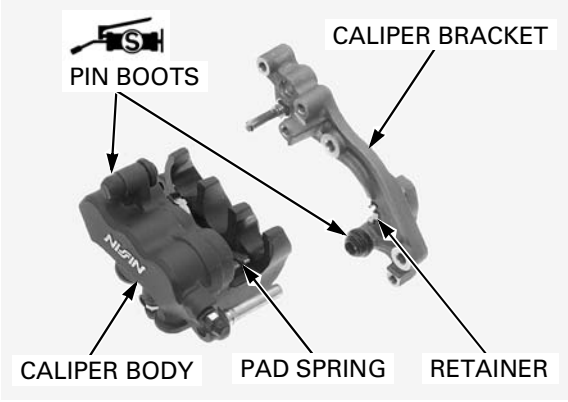

INSTALLATION

Install the front brake caliper onto the left fork leg.
Install new mounting bolts and tighten them to the specified torque.

TORQUE: 30 N·m (3.1 kgf·m, 22 lbf·ft)

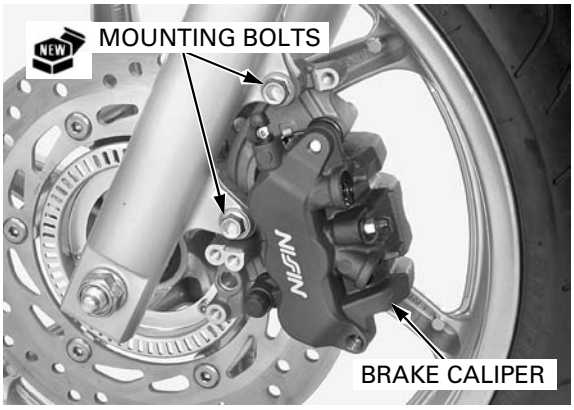

Connect the brake hoses to the front brake caliper with the oil bolts and new sealing washers.
Tighten the brake hose oil bolts to the specified torque while setting the hose joints against the stoppers on the caliper body.

TORQUE: 34 N·m (3.5 kgf·m, 25 lbf·ft)

Install the brake pads (page 17-13).
Fill brake fluid and bleed air the hydraulic system (page 17-7).

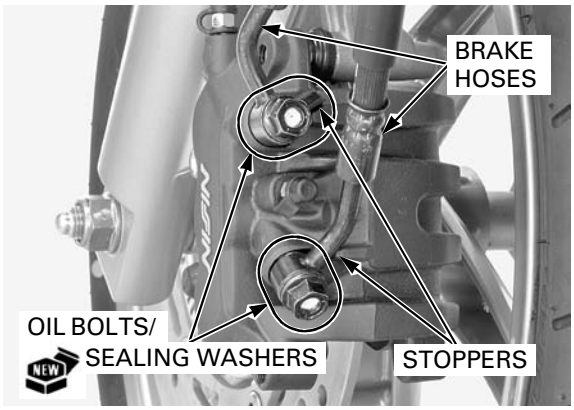

ABS type only.

Set the front wheel speed sensor and tighten the bolts.

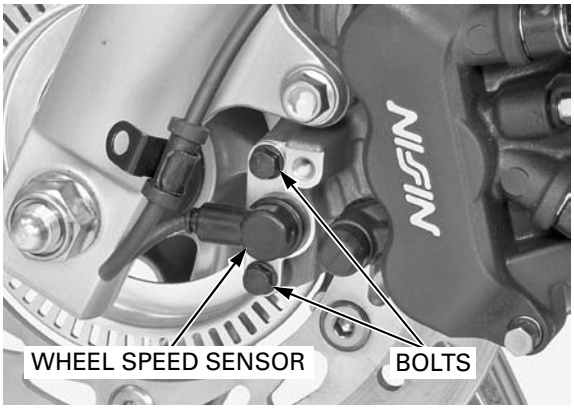

ABS type only. Route the sensor wire properly (page 1-19).

Set the lower wire clamp and tighten the clamp bolt.

Set the wire guide and upper wire clamp then tighten the clamp bolt.

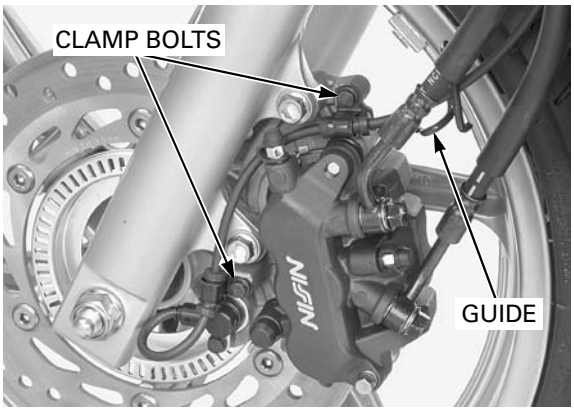

ABS type only.

Support the scooter securely using a hoist or equivalent and raise the wheel off the ground.

Measure the clearance (air gap) between the sensor and pulser ring at several points by turning the wheel slowly.
It must be within specification.

STANDARD: 0.2 – 1.2 mm (0.01 – 0.05 in)

The sensor air gap cannot be adjusted.
If it is not within specification, check each installation part for deformation, looseness and damage.

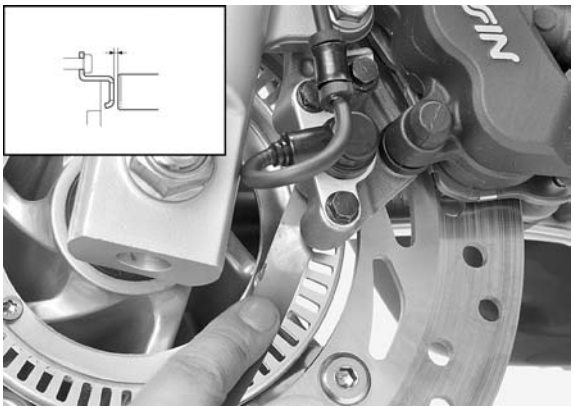

REAR BRAKE CALIPER

REMOVAL

Remove the following:

- exhaust pipe/muffler (page 3-15)
- brake hose protector (page 16-5)

Drain the brake fluid from the rear (combined) brake line hydraulic system (page 17-7).

When removing the brake hose oil bolt, cover the end of the hose to prevent contamination.

Disconnect the brake hose from the rear brake caliper by removing the oil bolt and sealing washers.

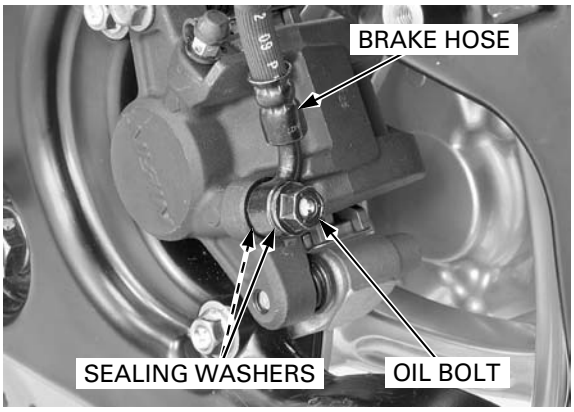

Remove the following:

- two mounting bolts
- brake caliper
- rear brake pads (page 17-14)

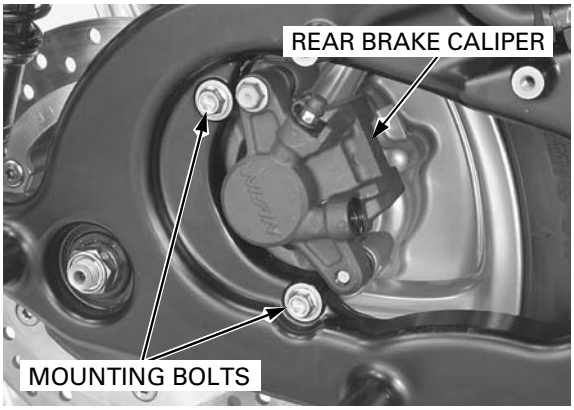

DISASSEMBLY

Remove the following:

- Caliper bracket
- Retainers
- Pin boots
- Caliper pin

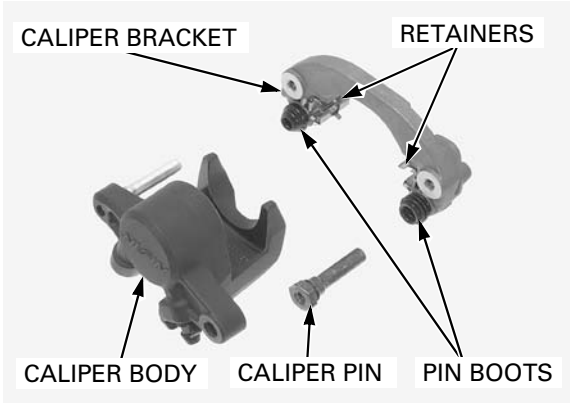

Place a shop towel over the piston.

Do not use high pressure air or bring the nozzle too close the inlet.

Position the caliper body with the piston down and apply small squirts of air pressure to the fluid inlet to remove the piston.

Be careful not to damage the piston sliding surface.

Push the dust seal and piston seal in and lift them out.

Clean the seal grooves, caliper cylinder and piston with clean brake fluid.

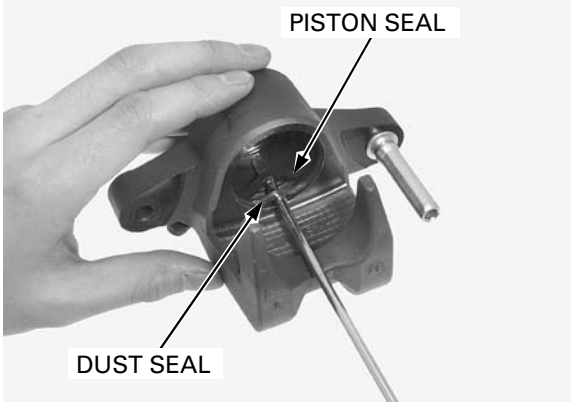

INSPECTION

Check the caliper cylinder for scoring, scratches or damage.

Measure the caliper cylinder I.D.

SERVICE LIMIT: 38.24 mm (1.506 in)

Check the caliper piston for scoring, scratches or damage.

Measure the caliper cylinder piston O.D.

SERVICE LIMIT: 38.09 mm (1.500 in)

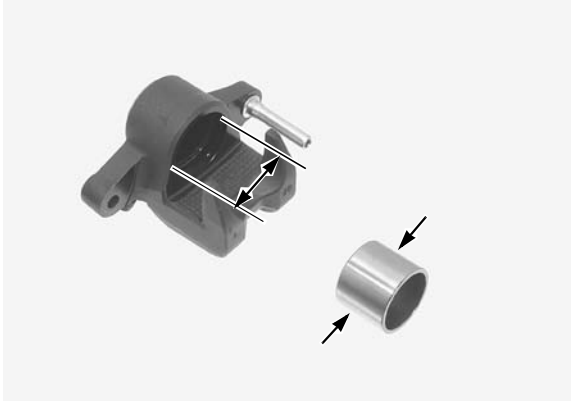

ASSEMBLY

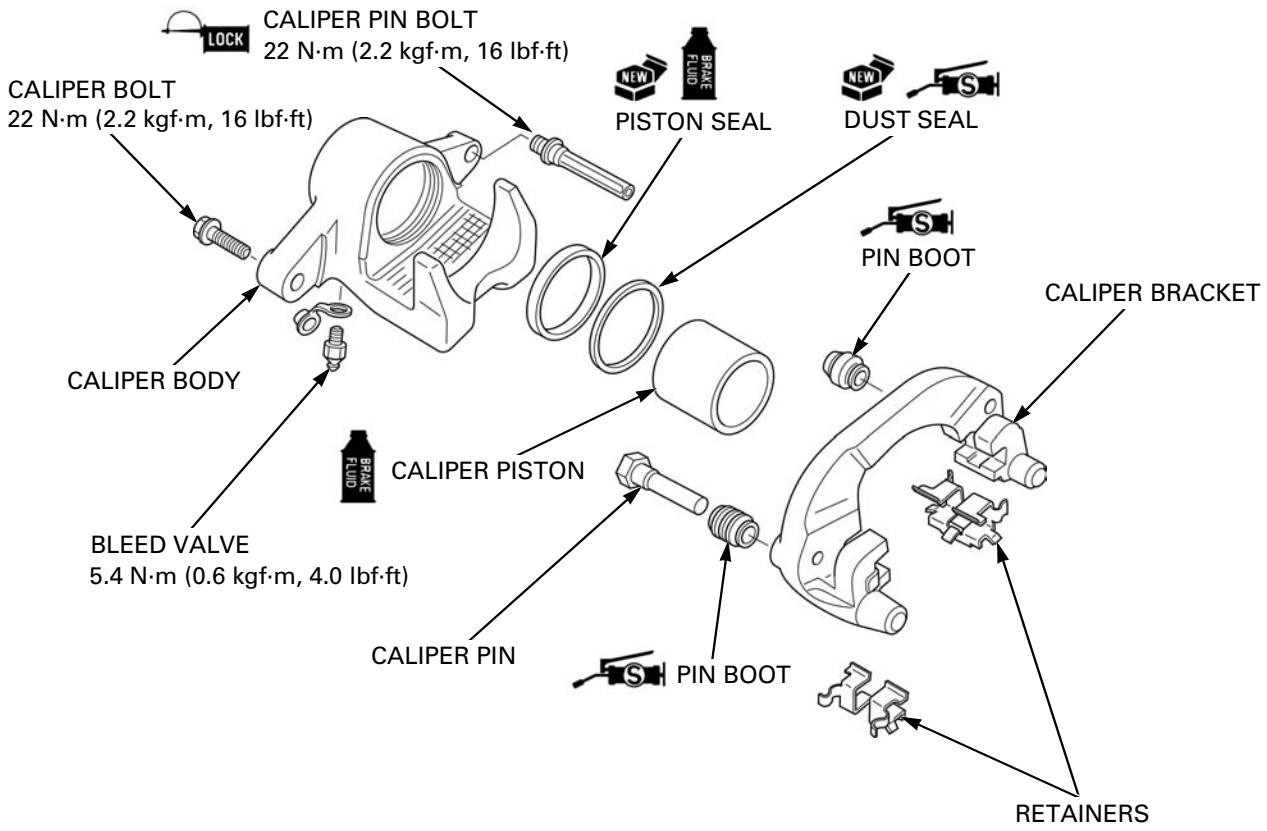

Coat a new dust seal with silicone grease, new piston seal with clean brake fluid and install them into the seal grooves in the caliper cylinder.

Coat the caliper piston with clean brake fluid and install it into the caliper cylinder with the opening side toward the pad.

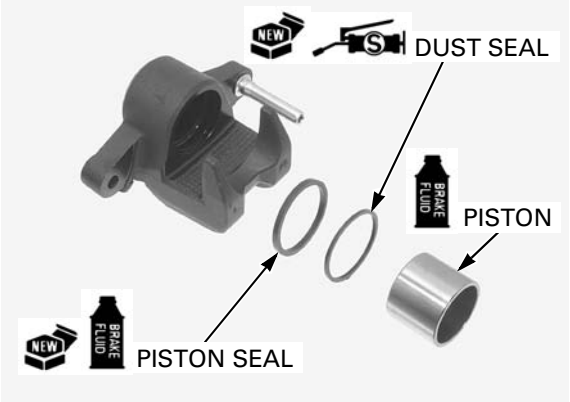

Check the caliper/bracket pin boots and replace them if they are hard, deteriorated or damaged.

Apply 0.4 g minimum of silicone grease to the caliper/bracket pin boots, and install them into the caliper body and bracket.

Install the caliper pin to the pin boot as shown.
Install the caliper bracket to the caliper body.

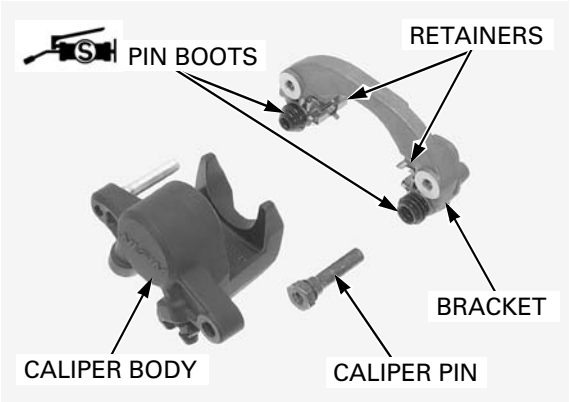

INSTALLATION

Install the rear brake pads (page 17-14).

Install the caliper to the swingarm so that the disc is positioned between the pads, being careful not to damage the pads.
Hold the caliper and install new brake caliper mounting bolts then tighten them to the specified torque.

TORQUE: 30 N·m (3.1 kgf·m, 22 lbf·ft)

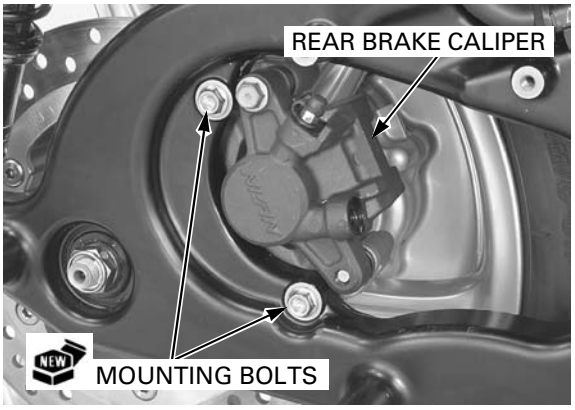

Connect the brake hose to the rear brake caliper with the oil bolt and new sealing washers.
Tighten the brake hose oil bolt to the specified torque while setting the hose joint against the stopper on the caliper body.

TORQUE: 34 N·m (3.5 kgf·m, 25 lbf·ft)

Fill brake fluid and bleed air the rear (combined) brake line hydraulic system (page 17-10).

Install the following:

– brake hose protector (page 16-11)
– exhaust pipe/muffler (page 3-15)

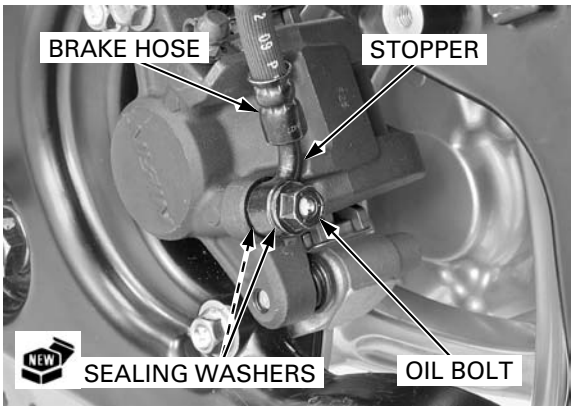

MEMO

18. ANTI-LOCK BRAKE SYSTEM (ABS; SH300A/AII/AIII)

ABS SYSTEM LOCATION 18-2

ABS SYSTEM DIAGRAM 18-3

SERVICE INFORMATION 18-4

ABS CONNECTOR LOCATIONS 18-5

BEFORE STARTING TROUBLESHOOTING 18-7

ABS INDICATOR PROBLEM CODE INDEX 18-10

TROUBLESHOOTING 18-11

FRONT WHEEL SPEED SENSOR 18-23

REAR WHEEL SPEED SENSOR 18-25

ABS MODULATOR 18-27

ABS SYSTEM LOCATION

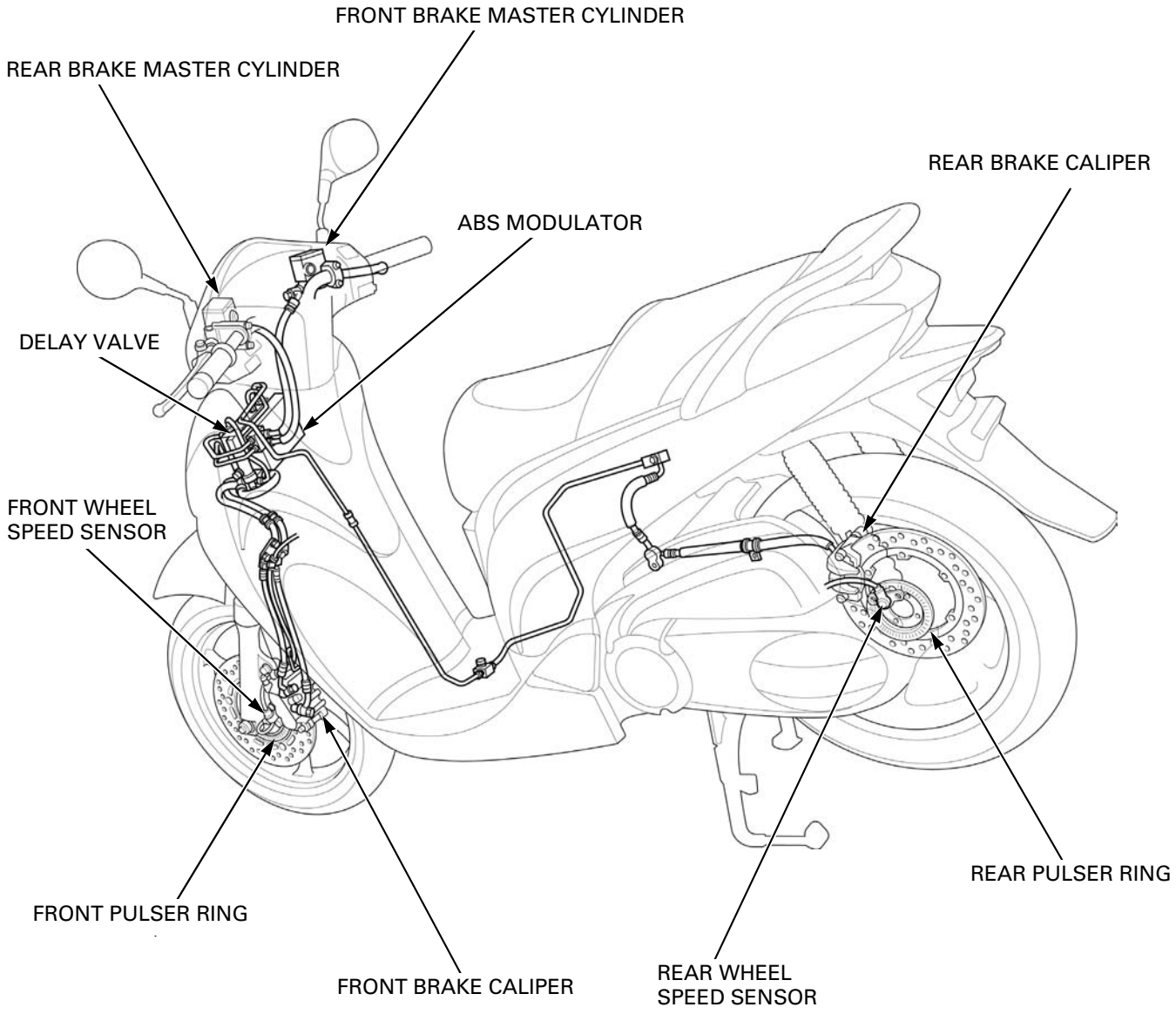

ABS SYSTEM DIAGRAM

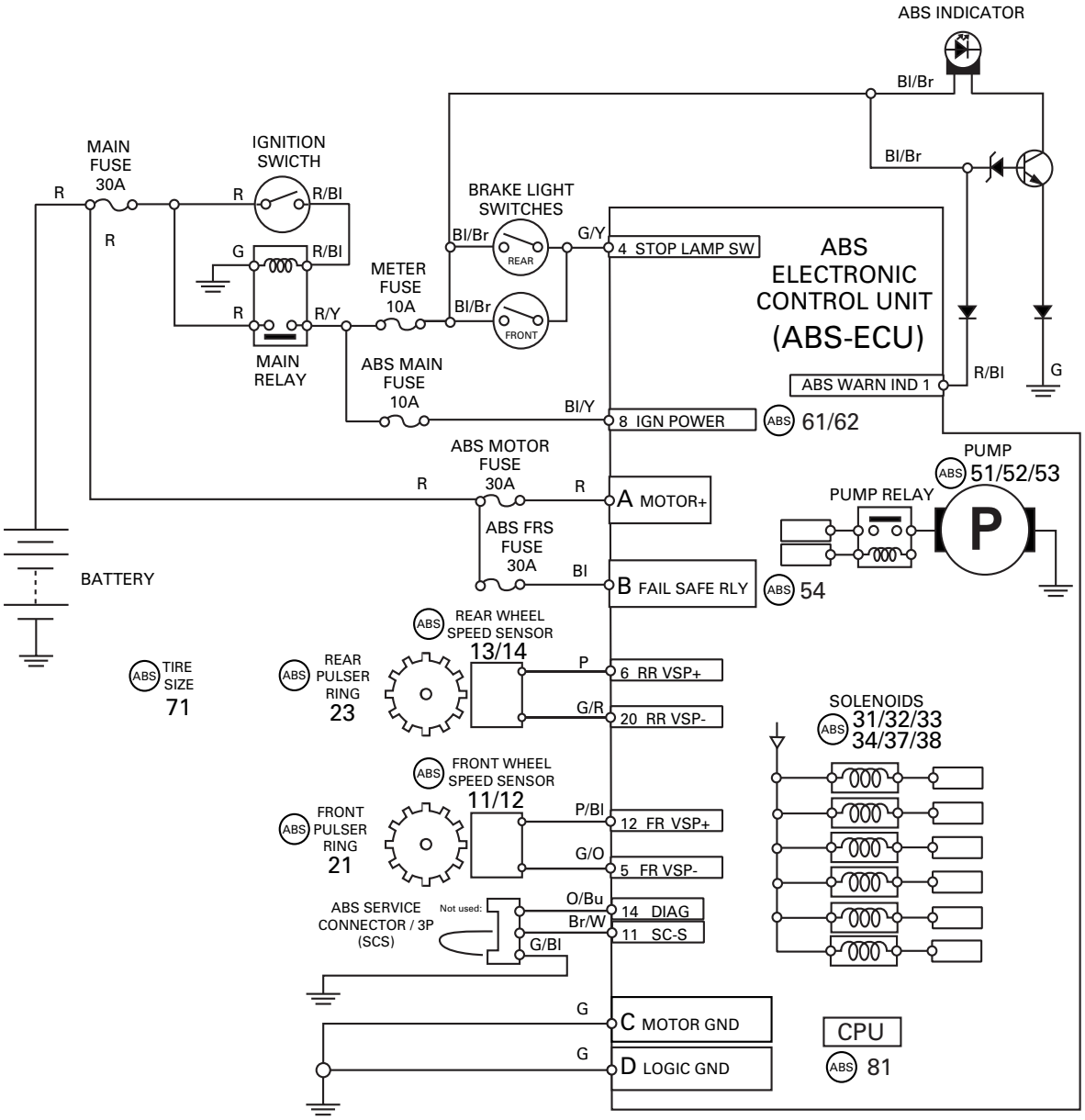

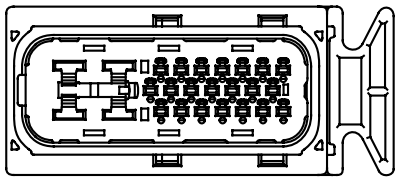

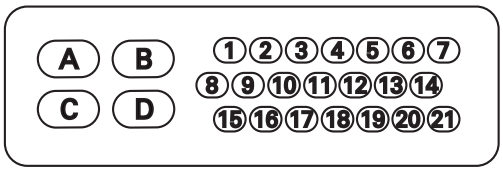

ABS CONTROL MODULE 25P CONNECTOR (Wire harness side)

Bl.... Black
Y..... Yellow
Bu... Blue
G..... Green
R..... Red
W..... White
Br.... Brown
O..... Orange
P..... Pink

SERVICE INFORMATION

GENERAL

- This section covers service of the Anti-lock Brake System (ABS; SH300A/AII/AIII). For conventional brake service, refer to section 17.
- Pre-start self-diagnosis starts when the ignition switch is turned "ON". ABS modulator control unit receives signals and detects if the ABS system functions normally. Pre-start self-diagnosis is complete by when the vehicle speed goes to 10 km/h (6 mph) approximately. The ABS system and the vehicle running condition are monitored constantly after pre-start self-diagnosis until the ignition switch is turned "OFF".
- When the ABS control unit detects a problem, it stops the ABS function and switches back to the conventional brake operation, and the ABS indicator blinks or stays on. Take care during the test ride.
- Troubles not resulting from a faulty ABS (e.g. brake disc squeak, unevenly worn brake pad) cannot be recognized by the ABS diagnosis system.
- When the ABS modulator control unit detects a problem, the ABS indicator blinks to notify the rider of the problem. To detect the faulty part, retrieve the problem code by shorting the service check connector terminals.
- Read "Before Starting Troubleshooting" carefully, inspect and troubleshoot the ABS system according to the Diagnostic Troubleshooting flow chart. Observe each step of the procedures one by one. Write down the problem code and probable faulty part before starting diagnosis and troubleshooting.
- ABS control unit (ECU) can record only the first problem data detected while the ignition switch is turned "ON" until it is turned "OFF" even when there are multiple failures, erase the problem code when diagnostic troubleshooting is complete, test ride the scooter above 30 km/h (18 mph) and check the other problem code by retrieving the self-diagnosis system.
- When the wheel speed sensor and/or pulser ring is replaced, check the clearance (air gap) between both components.
- The ABS control unit (ECU) is mounted on the modulator (the modulator with the built-in ECU). Do not disassemble the ABS modulator. Replace the ABS modulator as an assembly when it is faulty.
- The ABS modulator may be damaged if dropped. Also if a connector is disconnected when current is flowing, the excessive voltage may damage the control unit. Always turn off the ignition switch before servicing.
- Be careful not to damage the wheel speed sensor and pulser ring when removing and installing the wheel.
- The following color codes are used throughout this section.

Bu = Blue	G = Green	Lg = Light Green	R = Red
Bl = Black	Gr = Gray	O = Orange	W = White
Br = Brown	Lb = Light Blue	P = Pink	Y = Yellow

TORQUE VALUES

Brake pipe joint nut	14 N·m (1.4 kgf·m, 10 lbf·ft)	Apply brake fluid to the threads.
Sensor protector socket bolt	10 N·m (1.0 kgf·m, 7 lbf·ft)	ALOC bolt; replace with a new one.

ABS CONNECTOR LOCATIONS

NOTE 1: Remove the front upper cover (page 3-9).

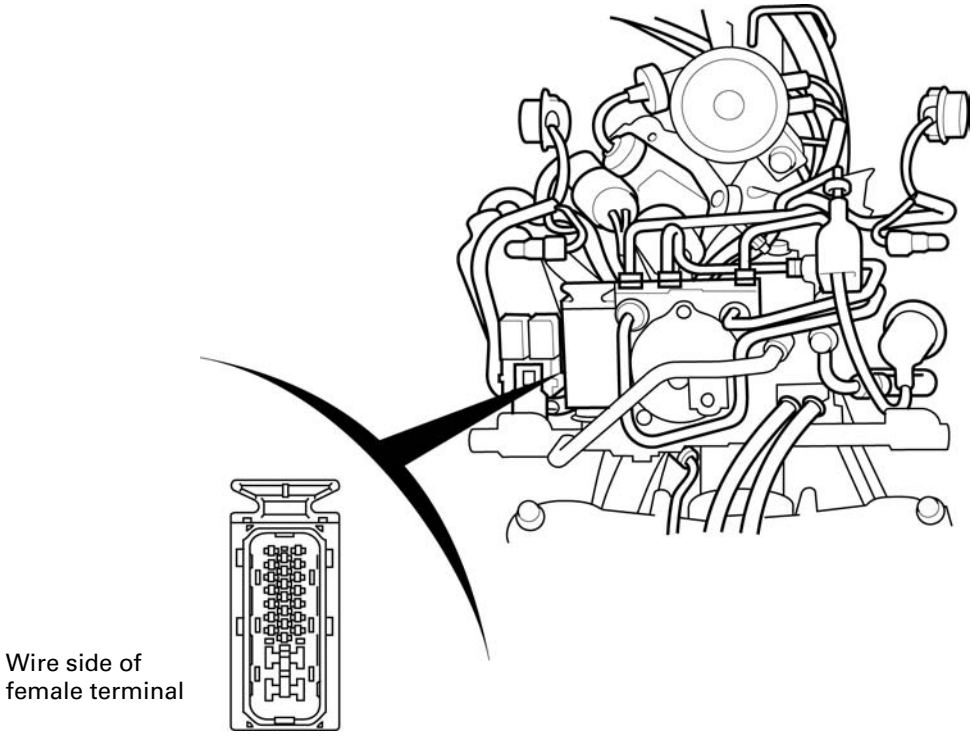

ABS MODULATOR 25P CONNECTOR
(NOTE 1)

NOTE 2: Remove the front inner cover (page 3-10).

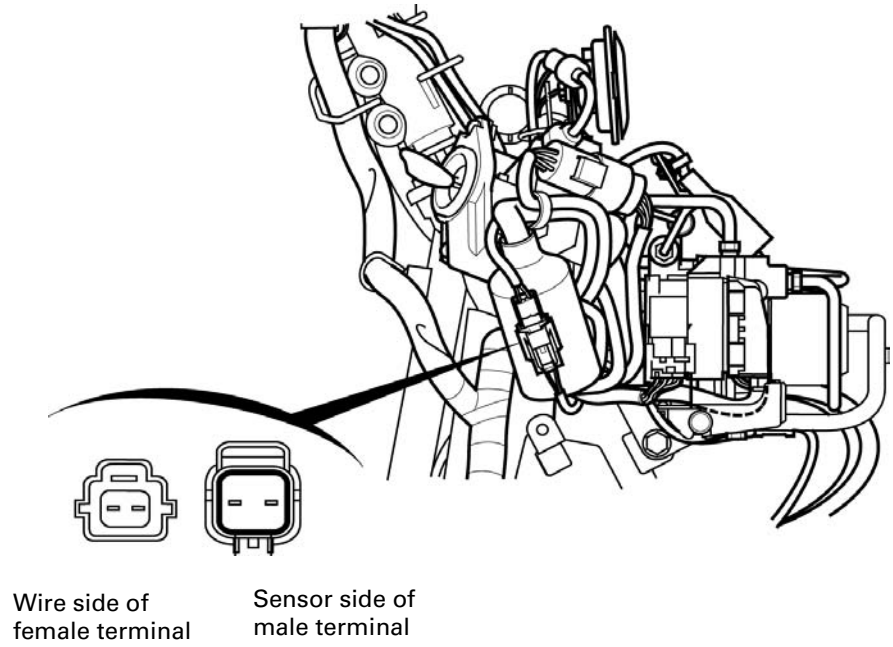

FRONT WHEEL SPEED SENSOR 2P
CONNECTOR (NOTE 2)

NOTE 3: Remove the maintenance lid (page 3-4).

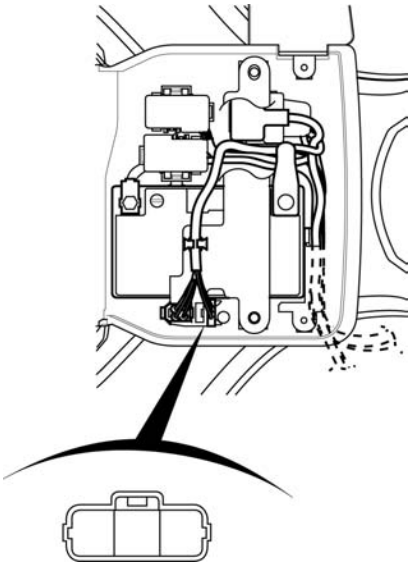

Wire side of
female terminal

ABS SERVICE CHECK
CONNECTOR (NOTE 3)

NOTE 4: Remove the luggage box (page 3-5).

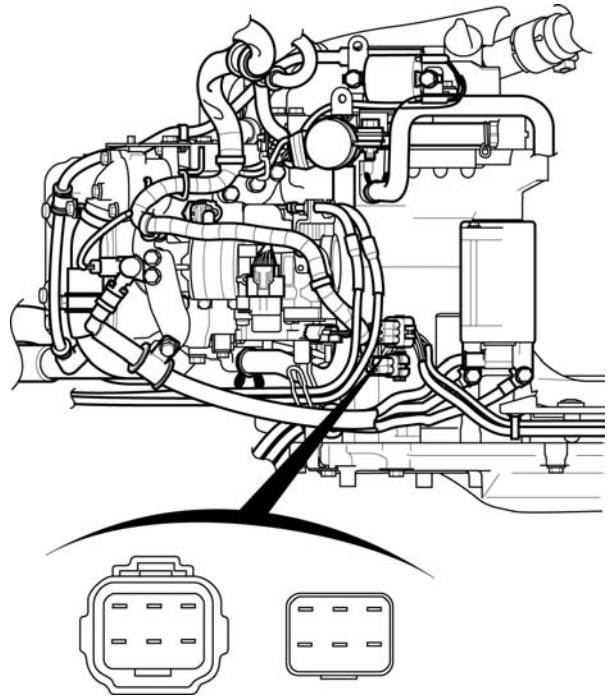

Wire side of
female terminal

Sensor side of
male terminal

REAR WHEEL SPEED SENSOR 6P
CONNECTOR (NOTE 4)

BEFORE STARTING TROUBLESHOOTING

SUMMARY OF ABS PRE-START SELF-DIAGNOSIS SYSTEM

The ABS pre-start self-diagnosis system diagnoses the electrical system as well as the operating status of the modulator. When there is any abnormality, the problem and the problematic part can be detected by outputting the problem code.

When the vehicle is running, pulse signals generated at the front/rear wheel speed sensor are sent to the ABS control unit. When the ABS control unit detects that vehicle speed goes to 6 km/h (4 mph), the pump motor is temporarily operated to check if the ABS system functions normally. If the system is normal, pre-start self-diagnosis is complete by when the vehicle speed goes to 10 km/h (6 mph) approximately.

If the ABS indicator blinks, because problem is detected during the pre-start self-diagnosis, See page 18-10.

If the ABS indicator does not come on when the ignition switch is turned "ON", or the ABS indicator stays on after the pre-start self-diagnosis procedure is complete, the ABS indicator may be faulty. Follow the troubleshooting (page 18-11).

Pre-start self-diagnosis when normal:

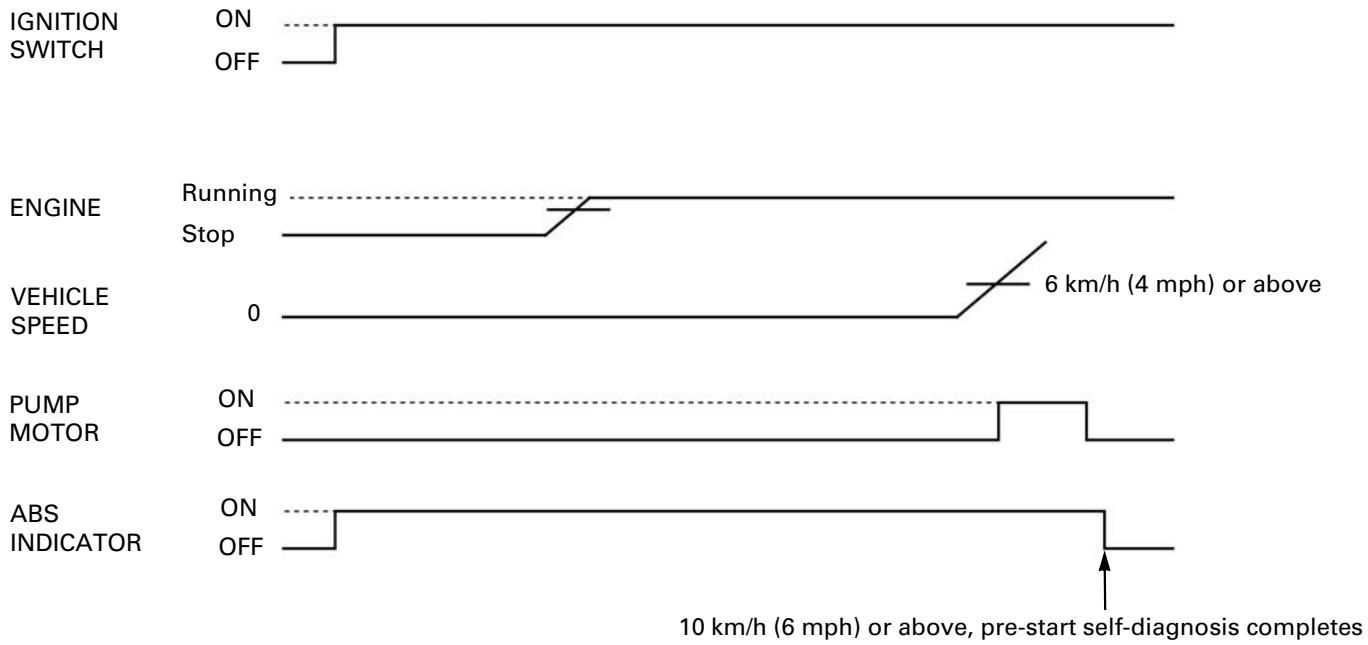

PRE-START SELF-DIAGNOSIS PROCEDURE

1. Turn the ignition switch "ON" and engine stop switch to "".
2. Make sure the ABS indicator comes on.
3. Start the engine.
4. Ride the scooter and increase the vehicle speed to approximately 10 km/h (6 mph).
5. The ABS is normal if the ABS indicator goes off.

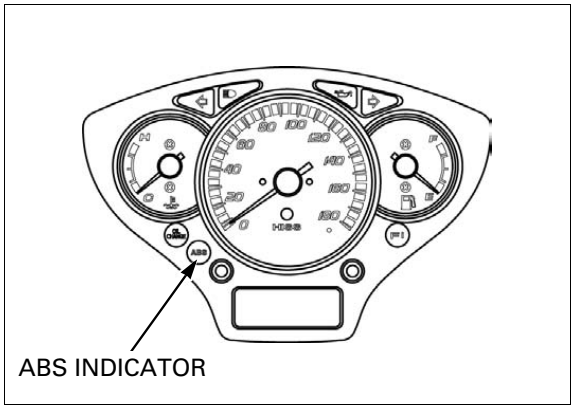

PROBLEM CODE INDICATION PATTERN

- The ABS indicator indicates the problem code by blinking a specified number of times.
  The ABS indicator denotes the problem codes from 11 to 81. The indicator has two types of blinks, a long blink and short blink. The long blink lasts for 1.3 seconds, the short blink lasts for 0.3 seconds. When two long blinks occur, and three short blinks, that problem code is 23 (two long blinks = 20 blinks, three short blinks = 3 blinks). Then, go to the troubleshooting and see problem code 23.
- When the ABS control unit stores some problem codes, the ABS indicator shows the problem codes in the order from the lowest number to highest number. For example, when the indicator indicates code 12, then indicates code 23, two failures have occurred.
- ABS control unit (ECU) can record only the first problem data detected while the ignition switch is turned "ON" until it is turned "OFF" even when there are multiple failures.
- If the problem code is not stored, the ABS indicator stays on.

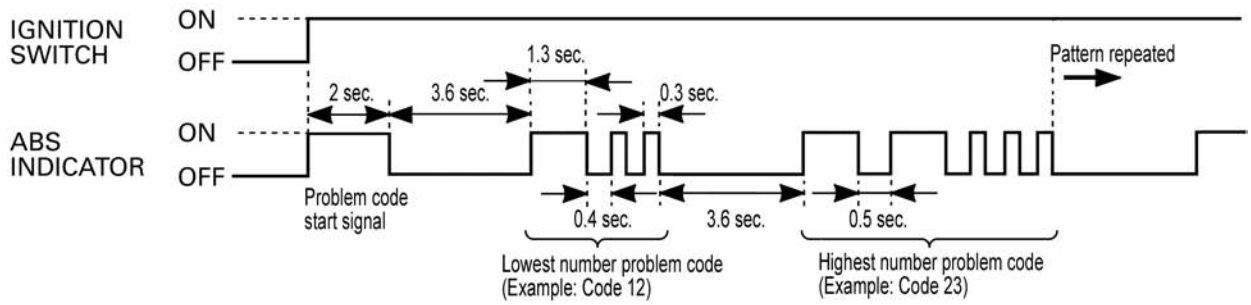

When the problem code is not stored:

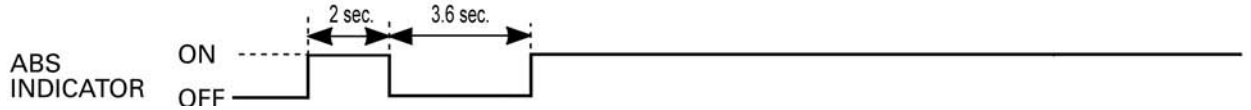

RETRIEVAL OF PROBLEM CODE

- The problem code is not erased by turning the ignition switch to "OFF" while the problem code is being output. Note that turning the ignition switch to "ON" again does not indicate the problem code. To show the problem code retrieval procedures from the beginning.
- After diagnostic troubleshooting, erase the problem code then test ride the scooter above 30 km/h (18 mph) and check the other problem code by retrieving the self-diagnosis system.
- Do not apply the front or rear brake during retrieval.

1. Turn the ignition switch "OFF".

   Remove the maintenance lid (page 3-4).

   Short the wire terminals of the ABS service check connector (3P Blue) with a jumper wire.

   CONNECTION: Brown/White – Green/Black

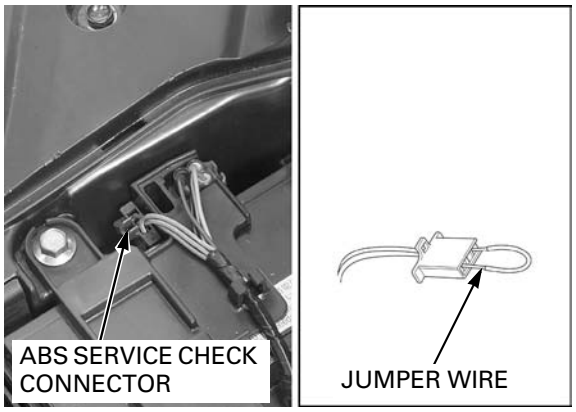

2. Turn the ignition switch "ON".

   The ABS indicator starts problem code indication.

   Note how many times the ABS indicator blinks, and determine the cause of the problem (page 18-10).

3. Turn the ignition switch "OFF" and remove the jumper wire.

   Install the maintenance lid (page 3-4).

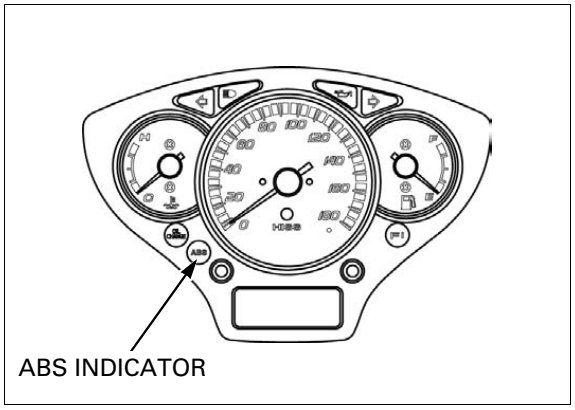

CLEANING PROBLEM CODE

1. Remove the maintenance lid (page 3-4).

   Short the wire terminals of the service check connector with a jumper wire with the ignition switch turned "OFF" in the same manner as retrieval.

   CONNECTION: Brown/White – Green/Black

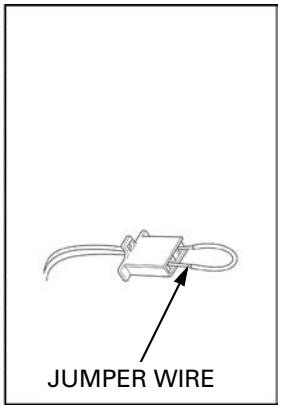

2. Turn the ignition switch "ON" and engine stop switch to "" while squeezing the brake lever. The ABS indicator should come on for 2 seconds and go off.
3. Release the brake lever immediately after the ABS indicator is off. The ABS indicator should come on.
4. Squeeze the brake lever immediately after the ABS indicator is on. The ABS indicator should go off.
5. Release the brake lever immediately after the ABS indicator is off.
   When code erasure is complete, the ABS indicator blinks 2 times and stays on.

   If the ABS indicator does not blink 2 times, the data has not been erased, so try again.

   If the ABS indicator blinks 2 times and blinks, faulty ABS system, go to ABS trouble shooting (page 18-11).

6. Turn the ignition switch to "OFF".

   Install the maintenance lid (page 3-4).

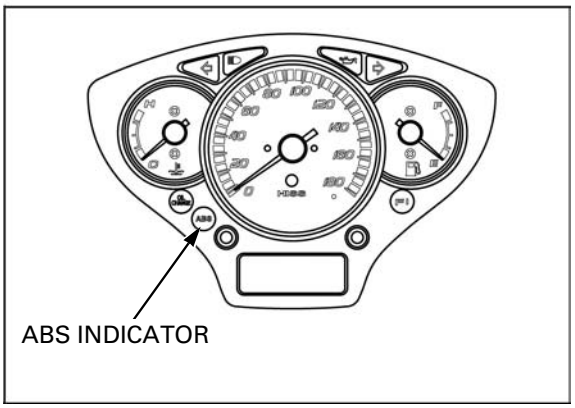

ABS INDICATOR PROBLEM CODE INDEX

- The ABS indicator denotes the problem codes from 11 to 81. The indicator has two types of blinks, a long blink and short blink. The long blink lasts for 1.3 seconds, the short blink lasts for 0.3 seconds.
- ABS control unit (ECU) can record only the first problem data detected while the ignition switch is turned "ON" until it is turned "OFF" even when there are multiple failures. To detect possible multiple failures, erase the problem code when diagnostic troubleshooting is complete, test ride the scooter above 30 km/h (18 mph) and check the other problem code by retrieving the self diagnosis system (page 18-7).
- The ABS indicator might blink in the following cases. Correct the faulty part.
  – Incorrect tire pressure.
  – Tires not recommended for the scooter were installed (incorrect tire size).
  – Deformation of the wheel or tire.
- The ABS indicator might blink while riding under the following conditions. This is temporary failure. Be sure to erase the problem code (page 18-9) then, test ride the scooter above 30 km/h (18 mph) and check the problem code by retrieving the self-diagnosis system (page 18-8). Ask the rider for the riding conditions in detail when the scooter is brought in for inspection.
  – The scooter has continuously run bumpy roads.
  – The front wheel leaves the ground for a long time when riding (wheelie).
  – Only either the front or rear wheel rotates.
  – The ABS operates continuously.
  – The ABS control unit has been disrupted by an extremely powerful radio wave (electromagnetic interference).

Problem Code	Check Part/Symptoms	Detection		Probable faulty part	Reference page
		A	B		
–	ABS indicator does not come on			• Indicator related wires	18-11
	ABS indicator stays on after the pre-start self-diagnosis procedure is complete				18-12
11	Front wheel speed sensor	O	O	• Wheel speed sensor or related wires	18-14
13	Rear wheel speed sensor	O	O		18-16
12	Front wheel speed sensor		O	• Wheel speed sensor or related wires • Electromagnetic interference	18-14
14	Rear wheel speed sensor		O		18-16
21	Front pulser ring		O	• Pulser ring or wheel speed sensor	18-14
23	Rear pulser ring		O		18-16
31	Solenoid valve	O	O	• Solenoid valve (modulator)	18-18
32					
33					
34					
37					
38					
41	Front wheel lock		O	• Riding condition	18-14
42	Front wheel lock (Wheelie)		O		
43	Rear wheel lock		O		18-16
51	Motor lock	O	O	• Pump motor (modulator) or related wires	18-18
52	Motor stuck off	O	O		
53	Motor stuck on	O	O		
54	Fail-safe relay	O	O	• Fail-safe relay (modulator) or related wires	18-19
61	Power circuit	O	O	• Input voltage (too low)	18-21
62	Power circuit	O	O	• Input voltage (too high)	
71	Tire		O	• Tire size	18-22
81	CPU	O	O	• ABS control unit (modulator)	18-22

(A) Pre-start self-diagnosis (page 18-7)
(B) Ordinary self-diagnosis: diagnoses while the scooter is running (after pre-start self-diagnosis)

TROUBLESHOOTING

- Perform inspection with the ignition switch turned "OFF", unless otherwise specified.
- All connector diagrams in the troubleshooting are viewed from the terminal side.
- Use a fully charged battery. Do not diagnose with a charger connected to the battery.
- When the ABS modulator assembly is detected to be faulty, recheck the wire harness and connector connections closely before replacing it.
- After diagnostic troubleshooting, erase the problem code (page 18-9) then test ride the scooter above 30 km/h (18 mph) and check the other problem code by retrieving the self-diagnosis system (page 18-8).

NO PROBLEM CODE FAILURE

ABS INDICATOR DOES NOT COME ON (when the ignition switch turned "ON")

1. **Combination Meter Power/ground Line Inspection**

   Check the combination meter power and ground lines (page 22-8).

   Are the wires normal?

   YES – GO TO STEP 2.

   NO – Open circuit in related wires.

2. **Indicator Operation Inspection**

   Disconnect the ABS modulator 25P connector.

   Turn the ignition switch "ON" and check the ABS indicator.

   Does the indicator come on?

   YES – Faulty ABS modulator.

   NO – GO TO STEP 3.

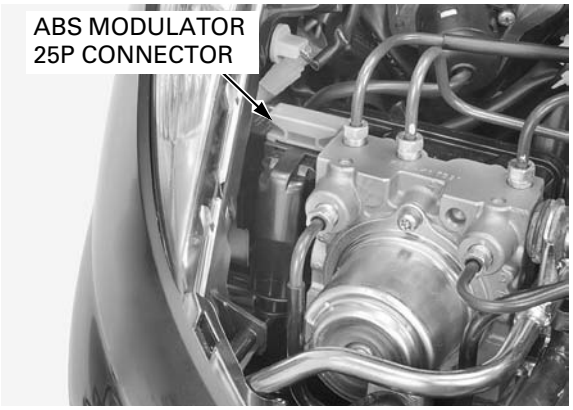

3. **Indicator Signal Line Short Circuit Inspection**

   Disconnect the combination meter connector (page 22-8).

   Check for continuity between the ABS modulator connector of the wire harness side and ground.

   CONNECTION: Red/Black – Ground

   Is there continuity?

   YES – Short circuit in Red/Black wire between the combination meter and ABS modulator.

   NO – Faulty combination meter.

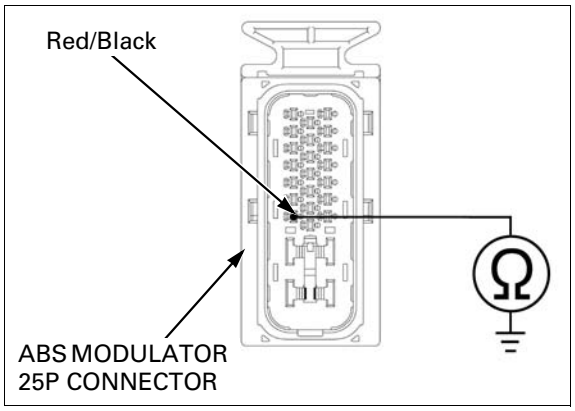

ABS INDICATOR STAYS ON (–Indicator does not go off when the scooter is running, –Problem code is not indicated by the retrieval procedure)

1. **Fuse Inspection**

   Check the "ABS MAIN" fuse (10 A) in the fuse box.

   Is the fuse blown?

   YES – GO TO STEP 2.

   NO – GO TO STEP 3.

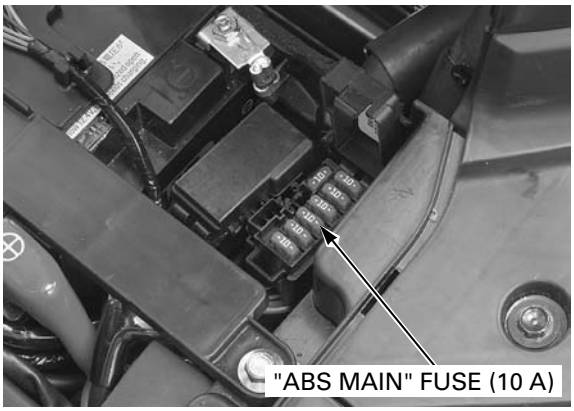

2. **ABS Power Input Line Short Circuit Inspection**

   Disconnect the ABS modulator 25P connector.

   Check for continuity between the ABS modulator connector of the wire harness side and ground with "ABS MAIN" fuse removed.

   CONNECTION: Black/Yellow – Ground

   Is there continuity?

   YES – Short circuit in Black/Yellow wire between the fuse box and ABS modulator.

   NO – Intermittent failure. Replace the "ABS MAIN" fuse (10 A) with a new one, and recheck.

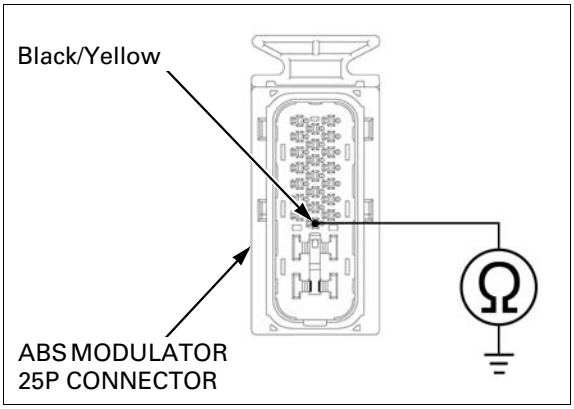

3. **ABS Power Input Line Open Circuit Inspection**

   Install the "ABS MAIN" fuse.
   Disconnect the ABS modulator 25P connector.

   Measure the voltage between the ABS modulator of the wire harness side with the ignition switch turned "ON".

   CONNECTION: Black/Yellow (+) – Green (–)

   Does the battery voltage exist?

   YES – GO TO STEP 4.

   NO –
   - Open circuit in Black/Yellow wire between the fuse box and ABS modulator.
   - Open circuit in Green wire between the ABS modulator and body ground.
   - Loose or poor contact on the connector

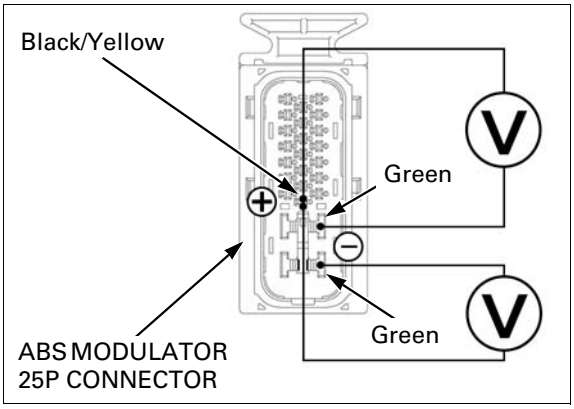

4. Service Check Line Short Circuit Inspection

Turn the ignition switch "OFF".

Check for continuity between the ABS modulator connector of the wire harness side and ground.

CONNECTION: Brown/White – Ground

Is there continuity?

YES – Short circuit in Brown/White wire between the service check connector and ABS modulator.

NO – GO TO STEP 5.

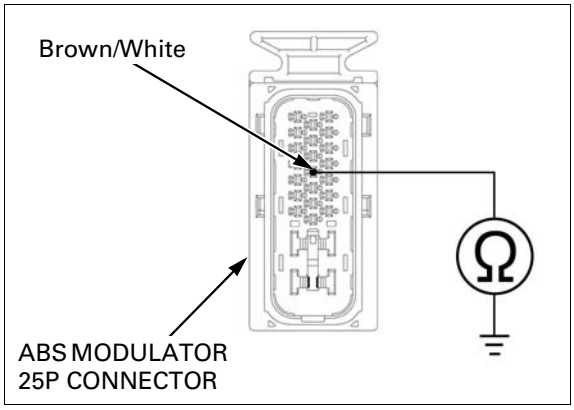

5. Indicator Operation Inspection

With the combination meter connector connected, short the Red/Black wire terminal of the combination meter and ground with a jumper wire.
Check the ABS indicator with the ignition switch turned "ON".

Does the ABS indicator go off?

YES – GO TO STEP 6.

NO – Faulty combination meter.

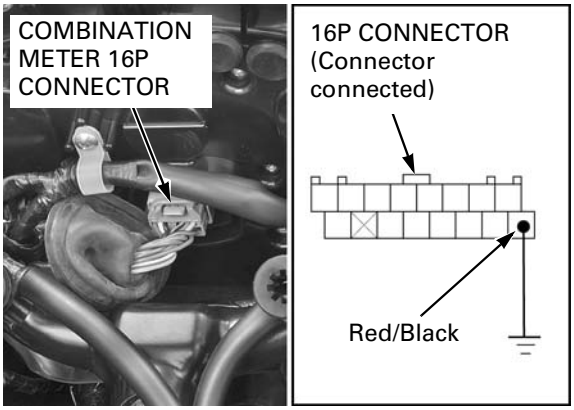

6. Indicator Signal Line Open Circuit Inspection

Turn the ignition switch "OFF".

Remove the jumper wire from the combination meter connector.
Short the Red/Black wire terminal of the ABS modulator 25P connector and ground with a jumper wire.
Check the ABS indicator with the ignition switch turned "ON".

Does the ABS indicator go off?

YES – Faulty ABS modulator.

NO – Open circuit in Red/Black wire between the combination meter and ABS modulator.

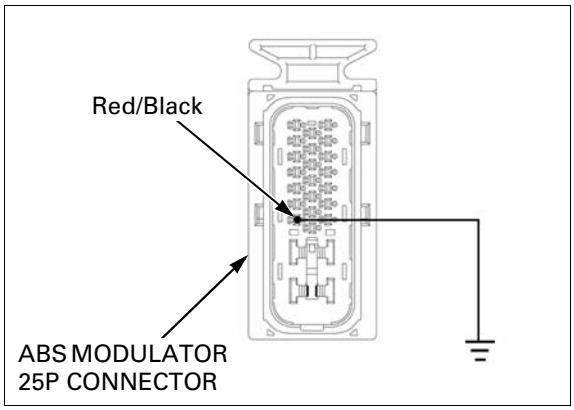

PROBLEM CODE 11, 12, 21, 41 or 42 (Front Wheel Speed Sensor)

- The ABS indicator might blink under unusual riding or conditions (page 18-10). This is temporary failure. Erase the problem code (page 18-9) then test ride the scooter above 30 km/h (18 mph) and check the problem code by retrieving the self-diagnosis system (page 18-8).
- If the problem code 41 is indicated, check the front brake for drag.

1. Speed Sensor Air Gap Inspection

Support the scooter securely using a hoist or equivalent and raise the wheel off the ground.
Measure the clearance (air gap) between the sensor and pulser ring at several points by turning the wheel slowly.

STANDARD: 0.2 – 1.2 mm (0.01 – 0.05 in)

Is the air gap correct?

YES – GO TO STEP 2.

NO – Check each part for deformation and looseness and correct accordingly. Recheck the air gap.

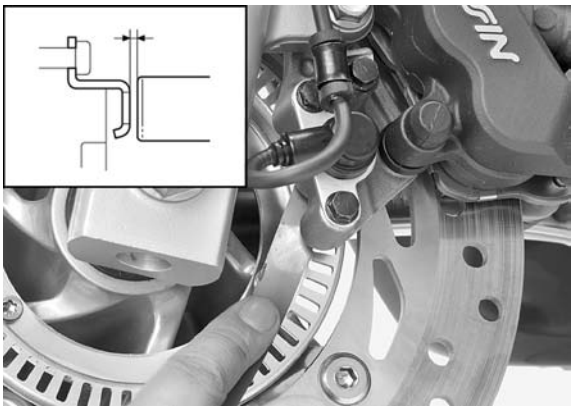

2. Speed Sensor Condition Inspection

Inspect the area around the front wheel speed sensor:
Check that there is iron or other magnetic deposits between the pulser ring and wheel speed sensor, and the pulser ring slots for obstructions.
Check installation condition of the pulser ring or wheel speed sensor for looseness.
Check the pulser ring and sensor tip for deformation or damage (e.g., chipped pulser ring teeth).

Are the sensor and pulser ring in good condition?

YES – GO TO STEP 3.

NO – Remove any deposits. Install properly or replace faulty part.

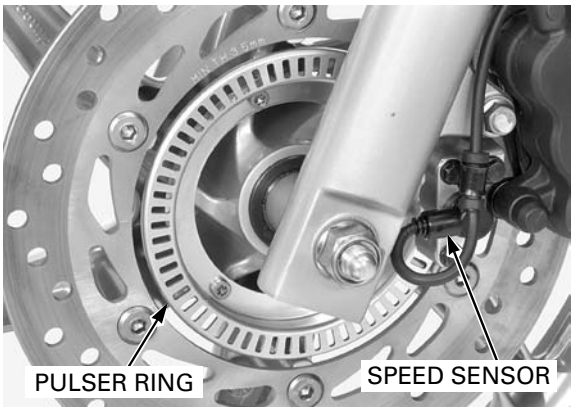

3. Speed Sensor Line Short Circuit Inspection (at control unit side)

Disconnect the ABS modulator 25P connector and the front wheel speed sensor 2P (Orange) connector.

Check for continuity between the ABS modulator connector of the wire harness side and ground.

CONNECTION: Pink/Black – Ground
Green/Orange – Ground

Is there continuity?

YES – Short circuit in wire between the ABS modulator and speed sensor.

NO – GO TO STEP 4.

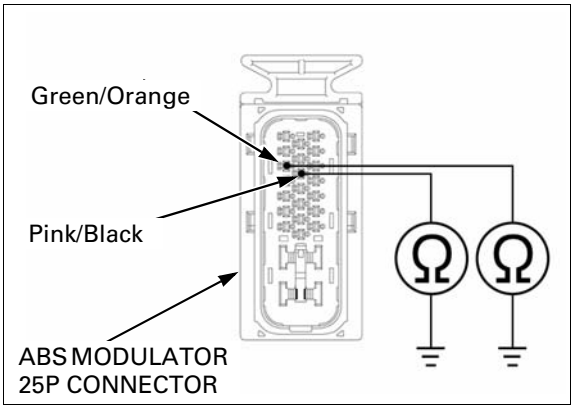

4. Speed Sensor Line Short Circuit Inspection (at sensor side)

Check for continuity between each terminal (Black and White) of the sensor side 2P connector and ground in the same manner as the previous step.

Is there continuity?

YES – Faulty front wheel speed sensor.

NO – GO TO STEP 5.

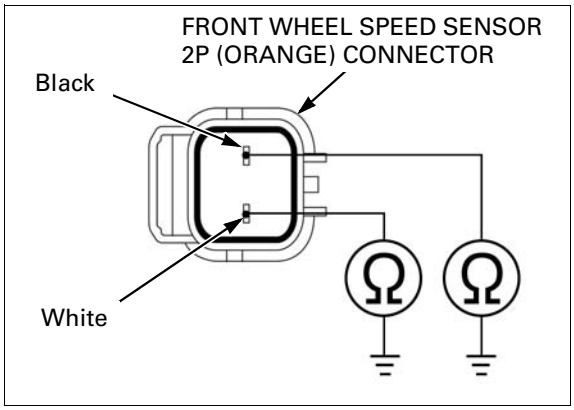

5. Speed Sensor Line Open Circuit Inspection

Short the Pink/Black and Green/Orange wire terminals of the ABS modulator 25P connector with a jumper wire.
Check for continuity at the terminals of the wire harness side front wheel speed sensor 2P (Orange) connector.

Is there continuity?

YES – GO TO STEP 6.

NO – Open circuit in wire between the ABS modulator and speed sensor.

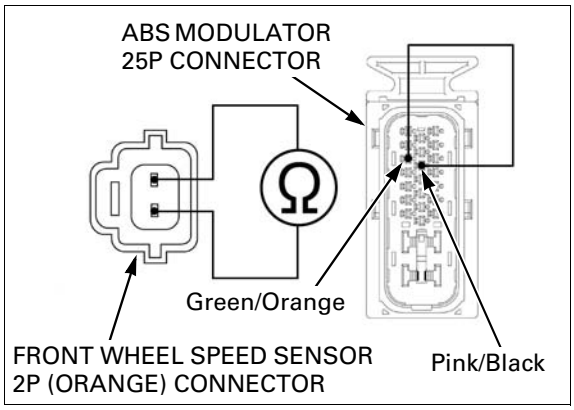

6. Failure Reproduction with a New Speed Sensor

Replace the front wheel speed sensor with a new one (page 18-23).
Connect the ABS modulator 25P connector.
Erase the problem code (page 18-9).
Test ride the scooter above 30 km/h (18 mph).
Retrieve the problem code (page 18-8).

Dose the indicator blink 11, 12, 21, 41 or 42 times?

YES – Faulty ABS modulator.

NO – Faulty removed wheel speed sensor.

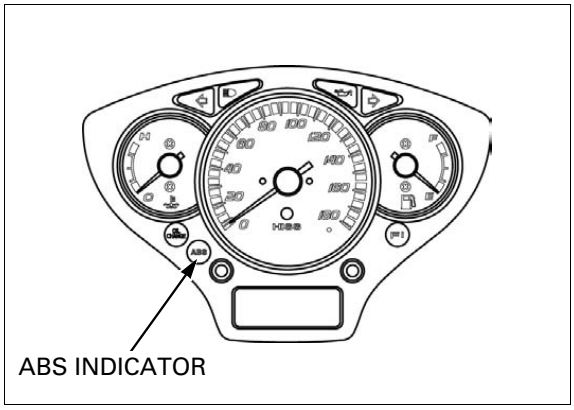

PROBLEM CODE 13, 14, 23 or 43 (Rear Wheel Speed Sensor)

- The ABS indicator might blink under unusual riding or conditions (page 18-10). This is temporary failure. Erase the problem code (page 18-9) then test ride the scooter above 30 km/h (18 mph) and check the problem code by retrieving the self-diagnosis system (page 18-8).
- If the problem code 43 is indicated, check the rear brake for drag.

1. Speed Sensor Air Gap Inspection

Place the scooter on its centerstand.
Measure the clearance (air gap) between the sensor and pulser ring at several points by turning the wheel slowly.

STANDARD: 0.2 – 1.2 mm (0.01 – 0.05 in)

Is the air gap correct?

YES – GO TO STEP 2.

NO – Check each part for deformation and looseness and correct accordingly. Recheck the air gap.

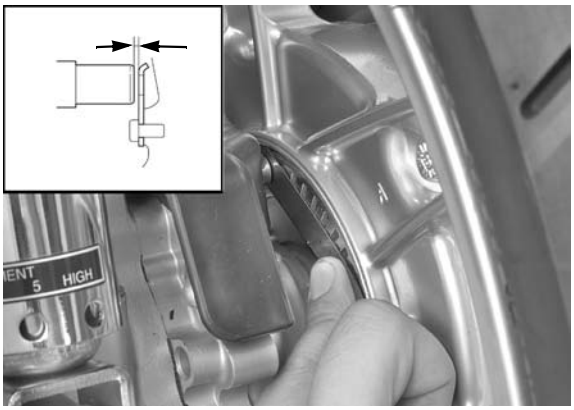

2. Speed Sensor Condition Inspection

Inspect the area around the rear wheel speed sensor:
Check that there is iron or other magnetic deposits between the pulser ring and wheel speed sensor, and the pulser ring slots for obstructions.
Check installation condition of the pulser ring or wheel speed sensor for looseness.
Check the pulser ring and sensor tip for deformation or damage (e.g., chipped pulser ring teeth).

Are the sensor and pulser ring in good condition?

YES – GO TO STEP 3.

NO – Remove any deposits. Install properly or replace faulty part.

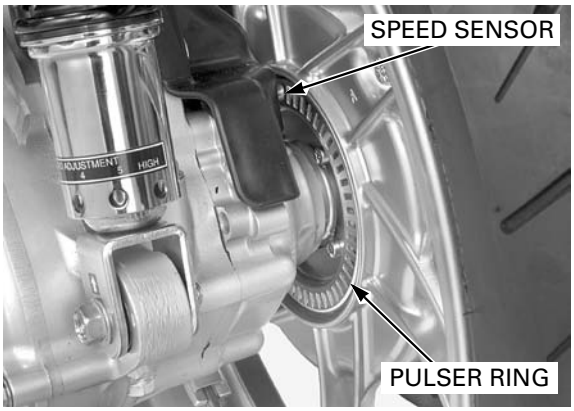

3. Speed Sensor Line Short Circuit Inspection (at control unit side)

Disconnect the ABS modulator 25P connector and the rear wheel speed sensor 6P connector.

Check for continuity between the ABS modulator connector of the wire harness side and ground.

CONNECTION: Pink – Ground
Green/Red – Ground

Is there continuity?

YES – Short circuit in wire between the ABS modulator and speed sensor.

NO – GO TO STEP 4.

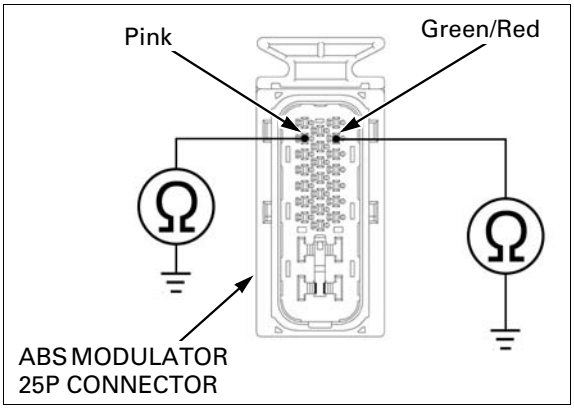

4. Speed Sensor Line Short Circuit Inspection (at sensor side)

Check for continuity between each terminal (Pink and Green/Red) of the sensor side 6P connector and ground in the same manner as the previous step.

Is there continuity?

YES – Faulty rear wheel speed sensor.

NO – GO TO STEP 5.

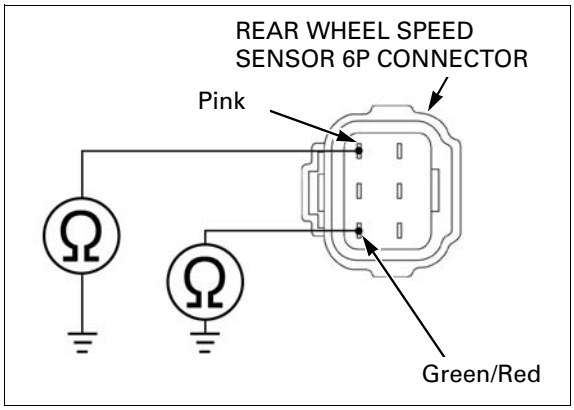

5. Speed Sensor Line Open Circuit Inspection

Short the Pink and Green/Red wire terminals of the ABS modulator 25P connector with a jumper wire.
Check for continuity at the terminals of the wire harness side rear wheel speed sensor 6P connector.

CONNECTION: Pink – Green/Red

Is there continuity?

YES – GO TO STEP 6.

NO – Open circuit in wire between the ABS modulator and speed sensor.

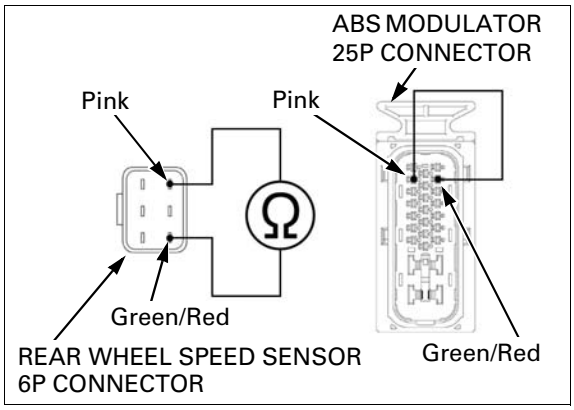

6. Failure Reproduction with a New Speed Sensor

Replace the rear wheel speed sensor with a new one (page 18-25).
Connect the ABS modulator 25P connector.
Erase the problem code (page 18-9).
Test ride the scooter above 30 km/h (18 mph).
Retrieve the problem code (page 18-8).

Dose the indicator blink 13, 14, 23 or 43 times?

YES – Faulty ABS modulator.

NO – Faulty removed wheel speed sensor.

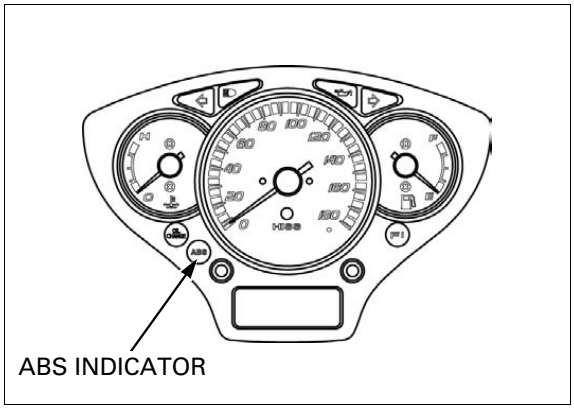

PROBLEM CODE 31, 32, 33, 34, 37 or 38 (Solenoid Valve)

1. Failure Reproduction

Erase the problem code (page 18-9).
Test ride the scooter above 30 km/h (18 mph).
Retrieve the problem code (page 18-8).

Does the indicator blink 31, 32, 33, 34, 37 or 38 times?

YES – Faulty ABS modulator.

NO – Solenoid valve is normal (temporary failure).

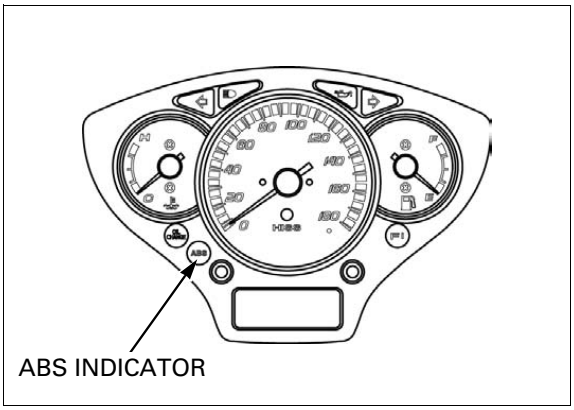

PROBLEM CODE 51, 52 or 53 (Pump Motor)

1. Fuse Inspection

Check the "ABS MOTOR" fuse (30 A) in the fuse box for blown.

Is the fuse blown?

YES – GO TO STEP 2.

NO – GO TO STEP 3.

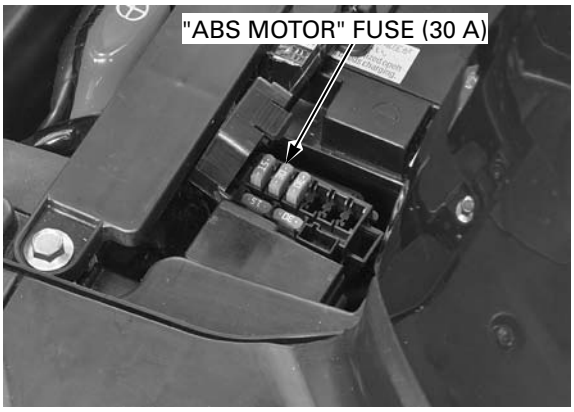

2. Motor Power Input Line Short Circuit Inspection

Disconnect the ABS modulator 25P connector.

Check for continuity between the ABS modulator 25P connector of the wire harness side and ground with "ABS MOTOR" fuse removed.

CONNECTION: Red – Ground

Is there continuity?

YES – Short circuit in Red wire between the fuse box and ABS modulator.

NO – Temporary failure. Replace the "ABS MOTOR" fuse (30 A) with a new one and recheck.

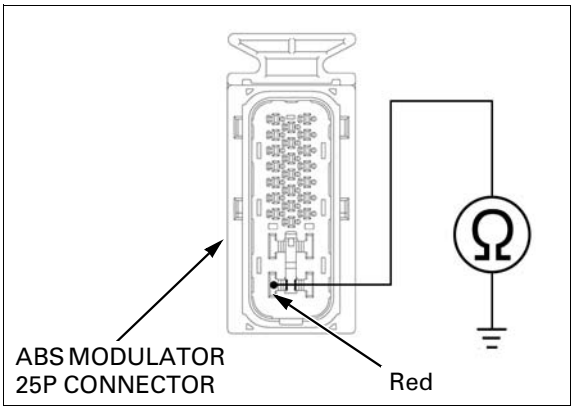

3. Motor Power Input Line Open Circuit Inspection (at control unit side)

Install the "ABS MOTOR" fuse.
Disconnect the ABS modulator 25P connector.

Measure the voltage between the ABS modulator 25P connector from the wire harness side. There should be battery voltage at all times.

CONNECTION: Red (+) – Green (–)

Is there battery voltage?

YES – GO TO STEP 4.

NO –
- Open circuit in Red wire between the battery and ABS modulator.
- Open circuit in Green wire between the ABS modulator and body ground.
- Loose or poor contact on the connector.

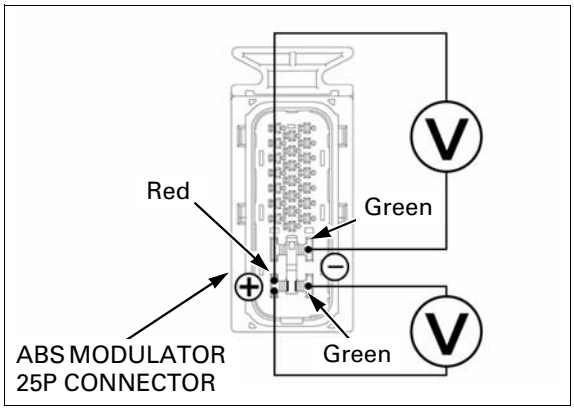

4. Failure Reproduction

Turn the ignition switch "OFF".
Connect the ABS modulator 25P connector.
Erase the problem code (page 18-9).
Test ride the scooter above 30 km/h (18 mph).
Retrieve the problem code (page 18-8).

Does the indicator blink 51, 52, or 53 times?

YES – Faulty ABS modulator.

NO – Pump motor is normal (temporary failure).

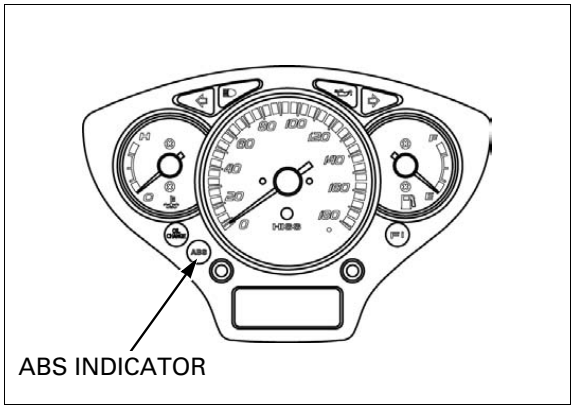

PROBLEM CODE 54 (Fail-safe Relay)

1. Fuse Inspection

Check the "ABS FSR" fuse (30 A) in the fuse box.

Is the fuse blown?

YES – GO TO STEP 2.

NO – GO TO STEP 3.

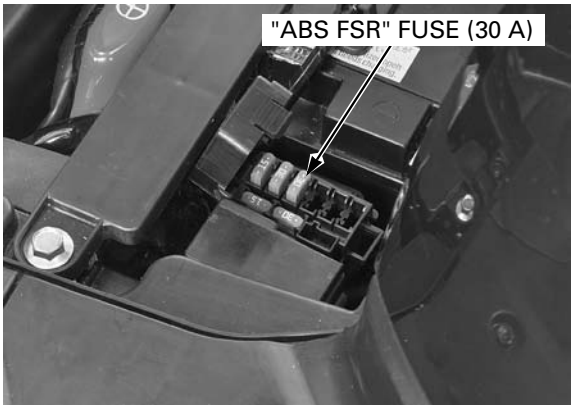

2. Relay Power Input Line Short Circuit Inspection

Disconnect the ABS modulator 25P connector.

Check for continuity between the ABS modulator 25P connector of the wire harness side and ground with "ABS FSR" fuse removed.

CONNECTION: Black – Ground

Is there continuity?

YES – Short circuit in Black wire between the fuse box and ABS modulator.

NO – Temporary failure. Replace the "ABS FSR" fuse (30 A) with a new one and recheck.

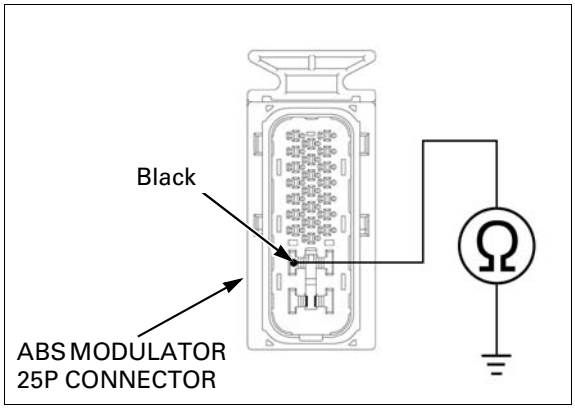

3. Relay Power Input Line Open Circuit Inspection (at control unit side)

Install the "ABS FSR" fuse (30 A).
Disconnect the ABS modulator 25P connector.

Measure the voltage between the ABS modulator 25P connector from the wire harness side. There should be battery voltage at all times.

CONNECTION: Black (+) – Green (–)

Is there battery voltage?

YES – GO TO STEP 4.

NO –
- Open circuit in Black wire and/or Red wire between the battery and ABS modulator.
- Open circuit in Green wire between the ABS modulator and ground.
- Loose or poor contact on the connector.

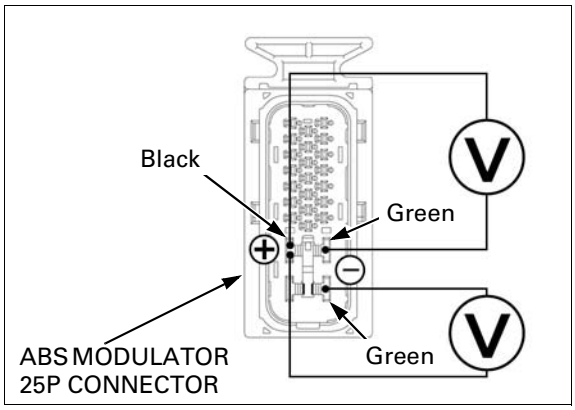

4. Failure Reproduction

Turn the ignition switch "OFF".
Connect the ABS modulator 25P connector.
Erase the problem code (page 18-9).
Test ride the scooter above 30 km/h (18 mph).
Retrieve the problem code (page 18-8).

Does the indicator blink 54 times?

YES – Faulty ABS modulator.

NO – Fail-safe relay is normal (temporary failure).

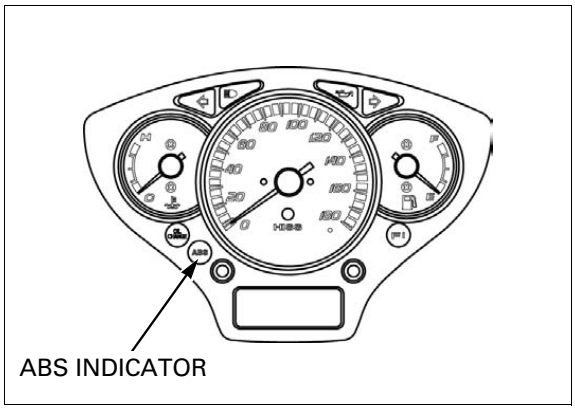

PROBLEM CODE 61 or 62 (Power Circuit)

1. Fuse Inspection

Check the "ABS MAIN" fuse (10 A) in the fuse box.

Is the fuse blown?

YES – GO TO STEP 2.

NO – GO TO STEP 3.

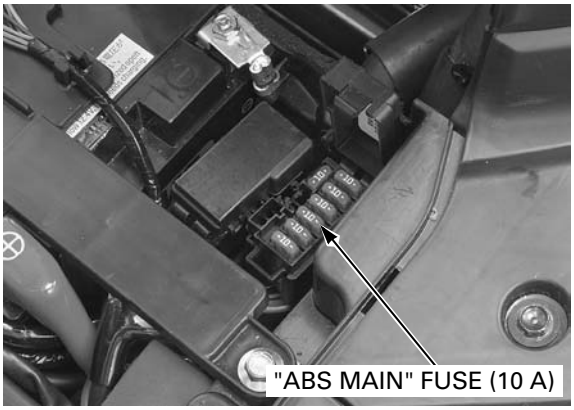

2. ABS Power Input Line Short Circuit Inspection

Disconnect the ABS modulator 25P connector.

Check for continuity between the ABS modulator connector of the wire harness side and ground with "ABS MAIN" fuse removed.

CONNECTION: Black/Yellow – Ground

Is there continuity?

YES – Short circuit in Black/Yellow wire between the fuse box and ABS modulator.

NO – Intermittent failure. Replace the "ABS MAIN" fuse (10 A) with a new one, and recheck.

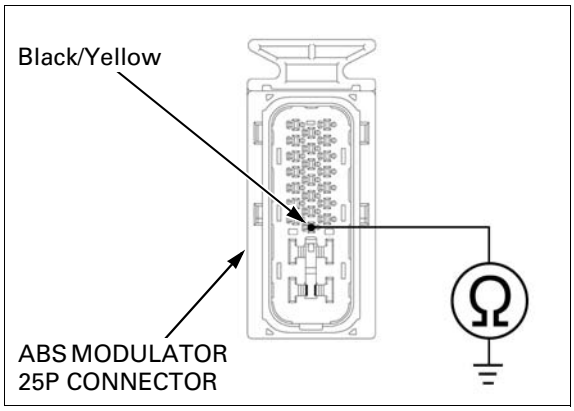

3. ABS Power Input Line Open Circuit Inspection

Install the "ABS MAIN" fuse.
Disconnect the ABS modulator 25P connector.

Measure the voltage between the ABS modulator of the wire harness side with the ignition switch turned "ON".

CONNECTION: Black/Yellow(+) – Green (–)

Does the battery voltage exist?

YES – GO TO STEP 4.

NO –
- Open circuit in Black/Yellow wire between the fuse box and ABS modulator.
- Open circuit in Green wire between the ABS modulator and body ground.
- Loose or poor contact on the connector

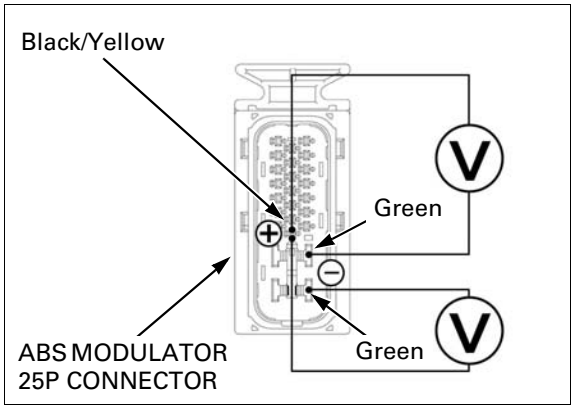

4. Failure Reproduction

Turn the ignition switch "OFF".
Connect the ABS modulator 25P connector.
Erase the problem code (page 18-9).
Test ride the scooter above 30 km/h (18 mph).
Retrieve the problem code (page 18-8).

Does the indicator blink 61 or 62 times?

YES – Faulty ABS modulator.

NO – Power circuit is normal (temporary failure).

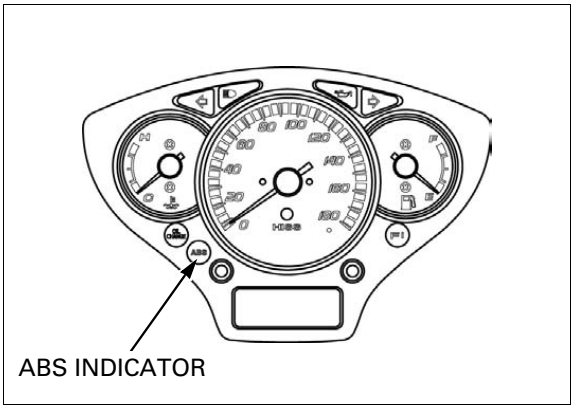

PROBLEM CODE 71 (Tire Size)

- Check the following and correct the faulty part.
  - Incorrect tire pressure.
  - Tires not recommended for the scooter were installed (incorrect tire size).
  - Deformation of the wheel or tire.

1. Failure Reproduction

If the above items are normal, recheck the problem code indication:
Erase the problem code (page 18-9).
Test ride the scooter above 30 km/h (18 mph).
Retrieve the problem code (page 18-8).

Does the indicator blink 71 times?

YES – Faulty ABS modulator.

NO – Tire size is normal (temporary failure).

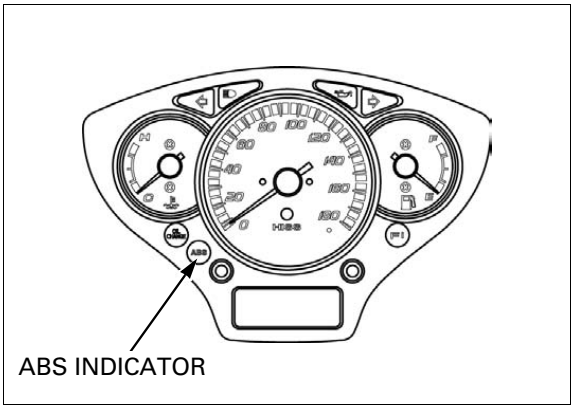

PROBLEM CODE 81 (CPU; ABS Control Unit)

1. Failure Reproduction

Erase the problem code (page 18-9).
Test ride the scooter above 30 km/h (18 mph).
Retrieve the problem code (page 18-8).

Does the indicator blink 81 times?

YES – Faulty ABS modulator.

NO – CPU is normal (temporary failure).

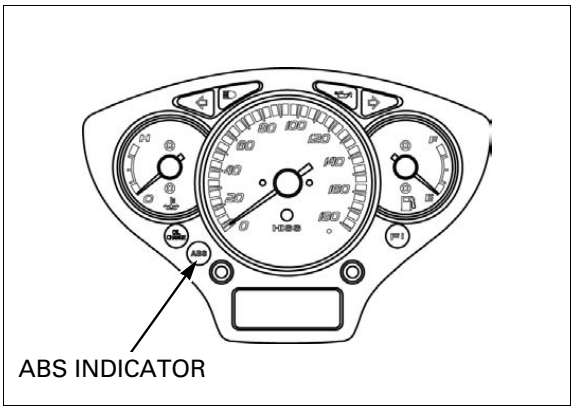

FRONT WHEEL SPEED SENSOR

INSPECTION

Support the scooter securely using a hoist or equivalent and raise the wheel off the ground.

Measure the clearance (air gap) between the sensor and pulser ring at several points by turning the wheel slowly.
It must be within specification.

STANDARD: 0.2 – 1.2 mm (0.01 – 0.05 in)

The sensor air gap cannot be adjusted.
If it is not within specification, check each installation part for deformation, looseness and damage.

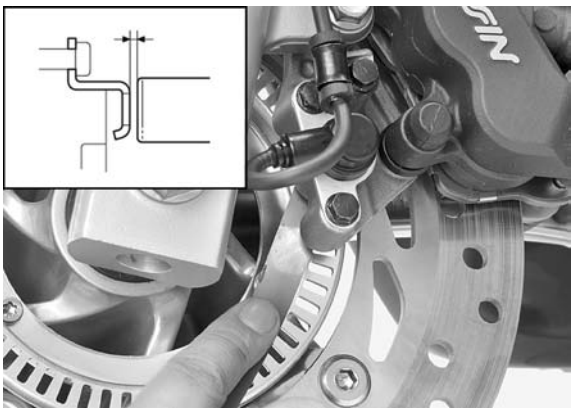

REMOVAL/INSTALLATION

Remove the front inner cover (page 3-10).

Disconnect the front wheel speed sensor 2P (Orange) connector.

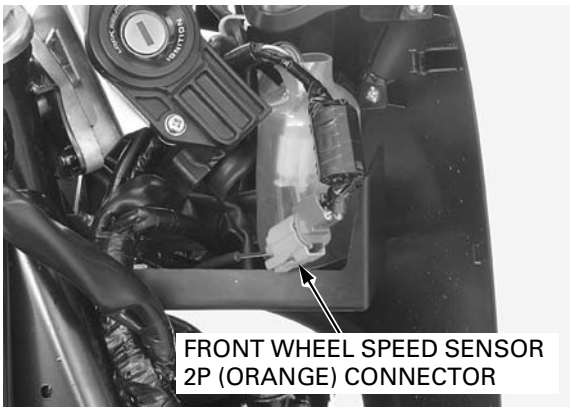

Release the wheel speed sensor wire from the clamps.

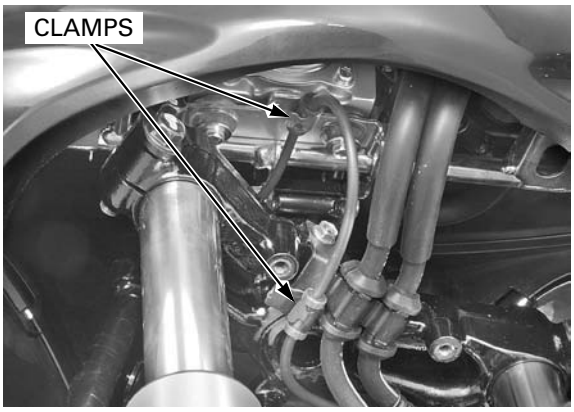

Release the wheel speed sensor wire from the clamp.

Remove the wire clamp bolts and wire guide.

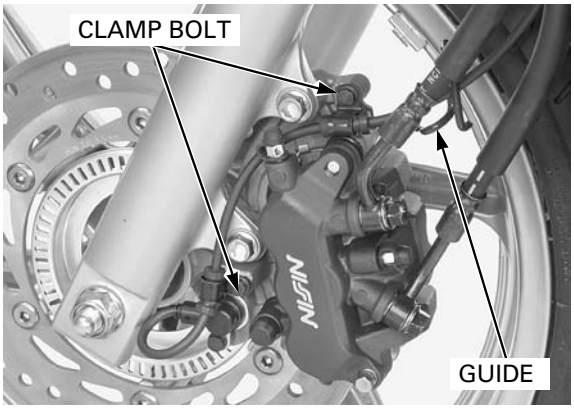

Remove the two bolts and front wheel speed sensor.

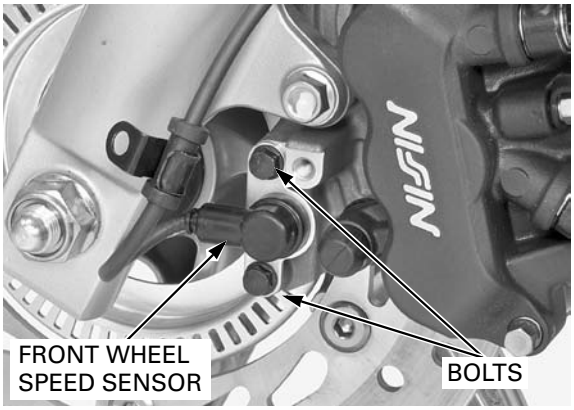

Check that there is iron or other magnetic deposits between the pulser ring and wheel speed sensor. Remove any deposits.

Check the sensor tip for deformation or damage (e.g., chipped pulser ring teeth).
Replace the speed sensor if necessary.

Route the sensor wire properly (page 1-19).

Installation is in the reverse order of removal.

After installing the speed sensor, Measure the clearance (air gap) between the sensor and pulser ring (page 18-23).

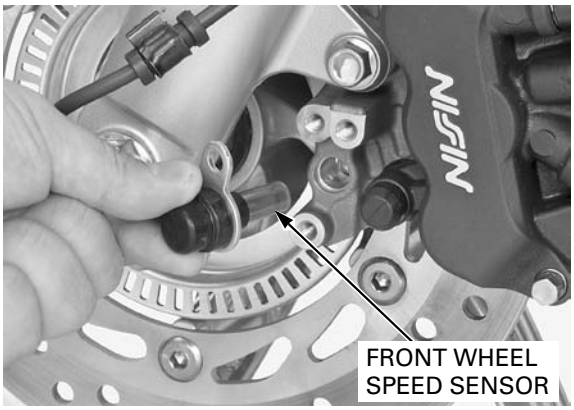

REAR WHEEL SPEED SENSOR

INSPECTION

Place the scooter on its centerstand.

Measure the clearance (air gap) between the sensor and pulser ring at several points by turning the wheel slowly.
It must be within specification.

STANDARD: 0.2 – 1.2 mm (0.01 – 0.05 in)

The sensor air gap cannot be adjusted.
If it is not within specification, check each installed part for deformation, looseness and damage.

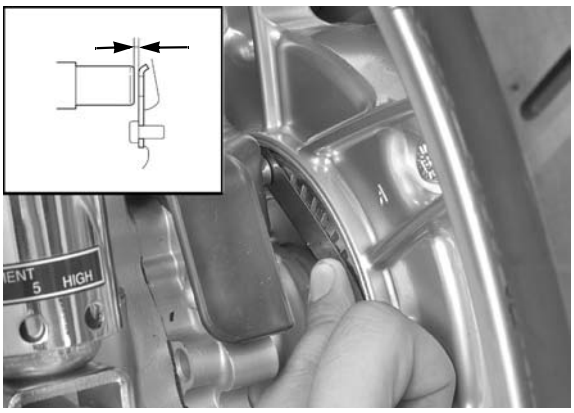

REMOVAL/INSTALLATION

Remove the following:

- Rear wheel (page 16-5)
- Luggage box (page 3-5)

Disconnect the rear wheel speed sensor/VS sensor 6P connector.

Remove the two mounting bolts from the air cleaner housing.

Slightly lift the air cleaner housing and release the rear wheel speed sensor/VS sensor wire clamp bosses.

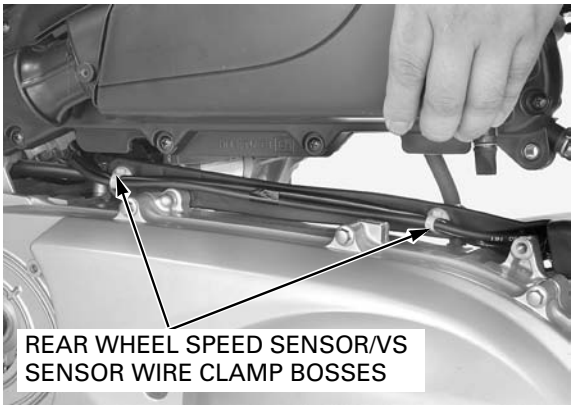

Remove the four socket bolts and sensor protector.

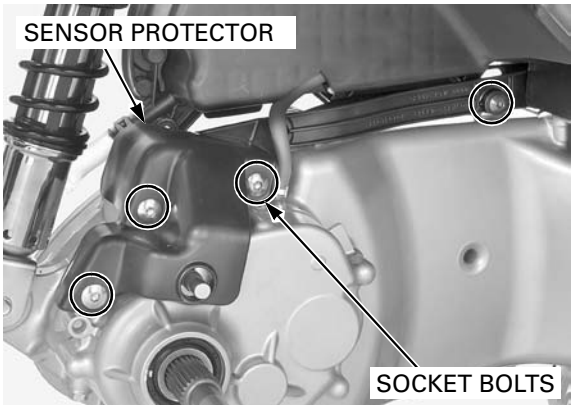

Remove the two bolts and rear wheel speed sensor.

Check that there is iron or other magnetic deposits between the pulser ring and wheel speed sensor. Remove any deposits.

Check the sensor tip for deformation or damage (e.g., chipped pulser ring teeth).
Replace the speed sensor if necessary.

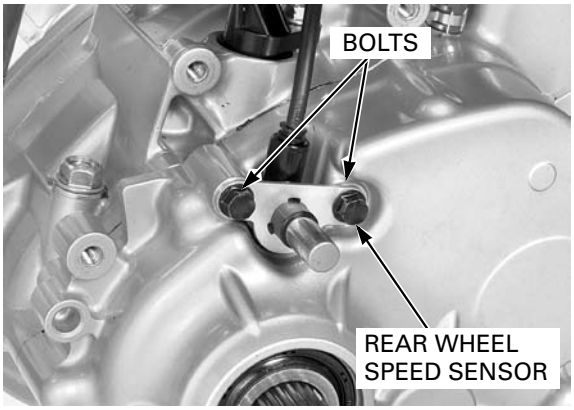

Route the sensor wire properly (page 1-19).

Installation is in the reverse order of removal.

- Replace the sensor protector socket bolt with new ones.

TORQUE: Sensor protector socket bolt
10 N·m (1.0 kgf·m, 7 lbf·ft)

After installing the speed sensor, Measure the clearance (air gap) between the sensor and pulser ring (page 18-25).

ABS MODULATOR

REMOVAL/INSTALLATION

Drain the brake fluid from the front and rear hydraulic systems (page 17-7).

Remove the following:

– front lower cover (page 3-12)
– front inner cover (page 3-10)

Disconnect the ABS modulator 25P connector (pull the lock lever up to disconnect it).

When loosening the joint nuts, cover the end of the brake pipes to prevent contamination.

Loosen the joint nuts and disconnect the five brake pipes.

Be careful not to bend or damage the brake pipes during ABS modulator assembly removal.

Remove the three mounting bolts and ABS modulator assembly (so the assembly does not interfere with the brake pipes).

Installation is in the reverse order of removal.

TORQUE: Brake pipe joint nut
14 N·m (1.4 kgf·m, 10 lbf·ft)

- Apply brake fluid to the brake pipe joint nut threads.

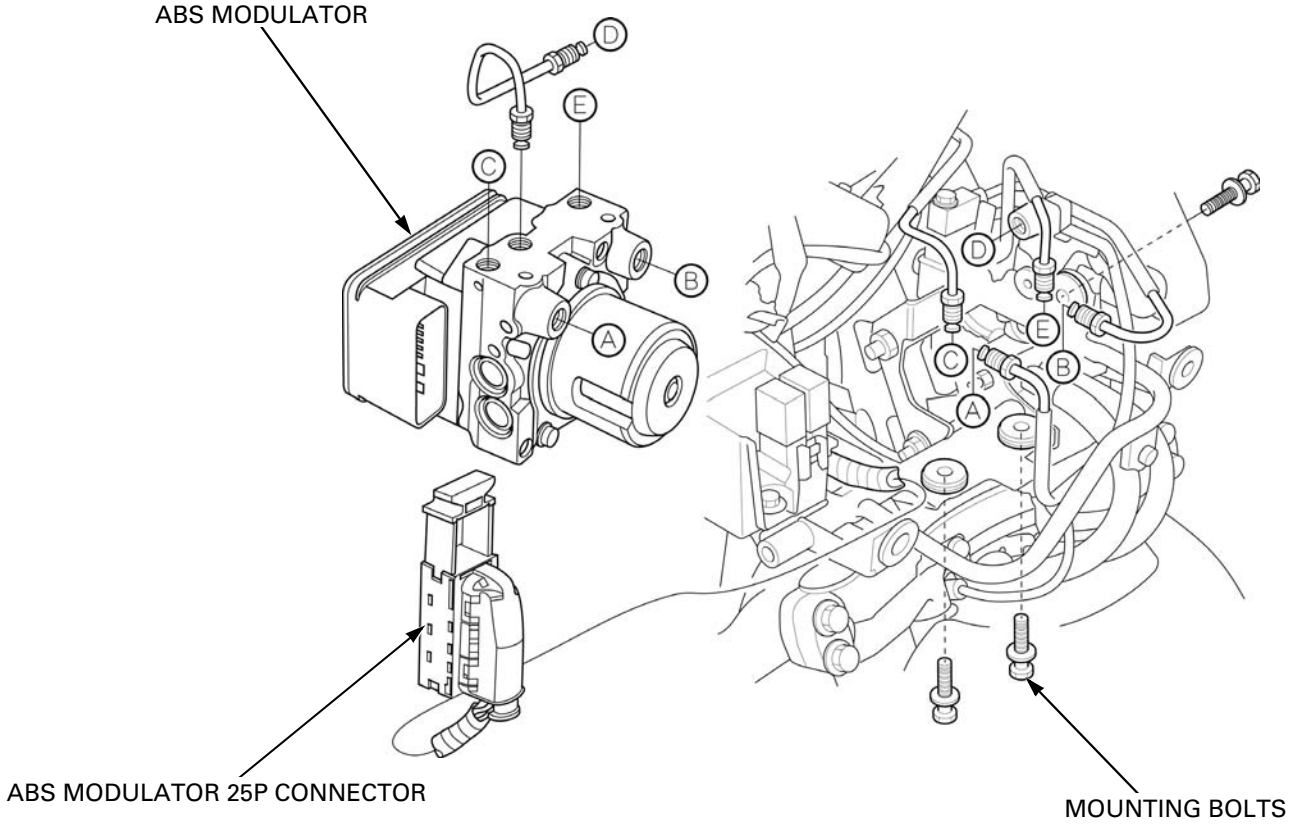

MEMO

19. BATTERY/CHARGING SYSTEM

SYSTEM LOCATION 19-2

SYSTEM DIAGRAM 19-2

SERVICE INFORMATION 19-3

TROUBLESHOOTING 19-5

BATTERY 19-6

CHARGING SYSTEM INSPECTION 19-7

ALTERNATOR 19-8

REGULATOR/RECTIFIER 19-8

SYSTEM LOCATION

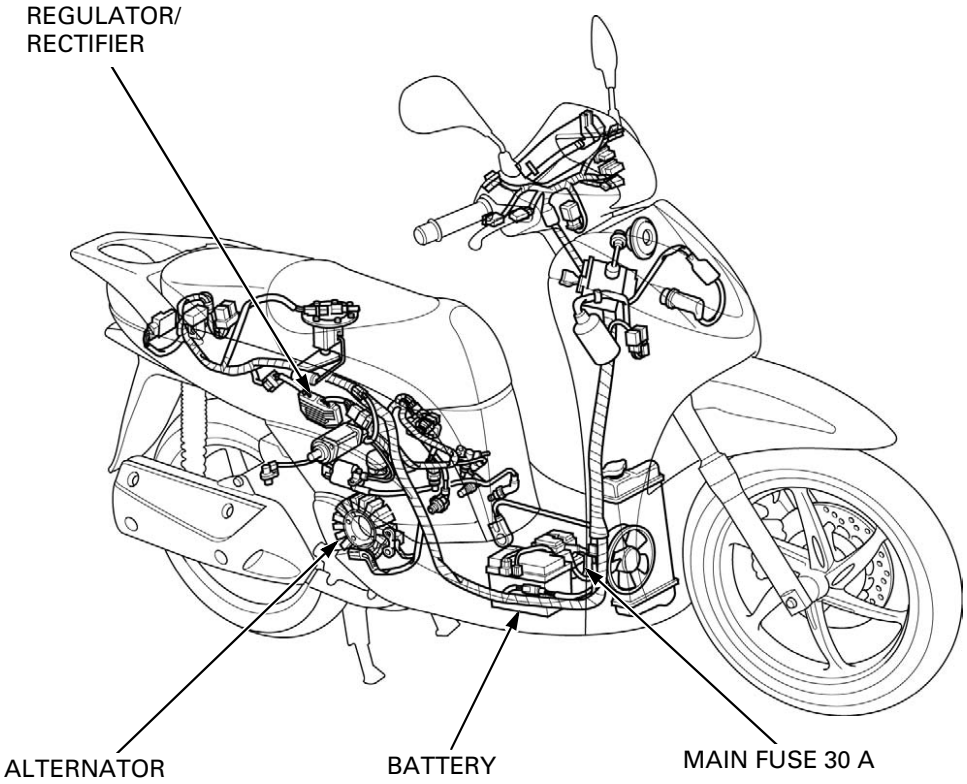

SYSTEM DIAGRAM

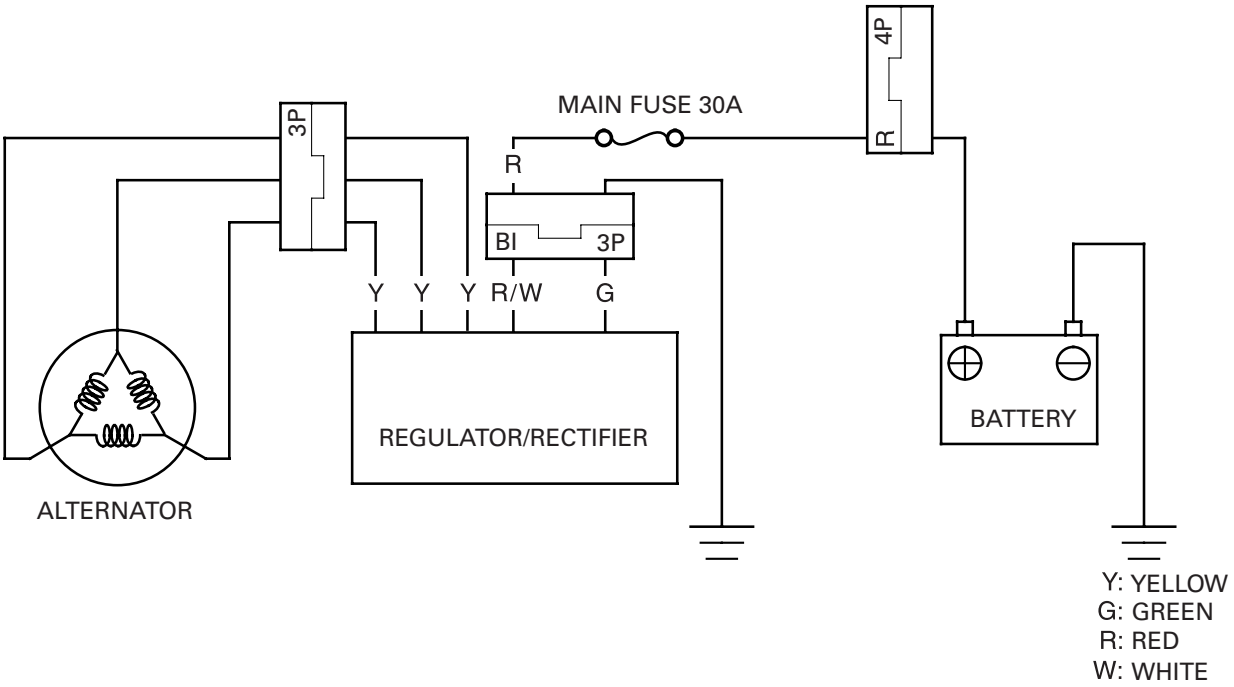

SERVICE INFORMATION

GENERAL

⚠WARNING

- The battery gives off explosive gases; keep sparks, flames and cigarettes away. Provide adequate ventilation when charging.
- The battery contains sulfuric acid (electrolyte). Contact with skin or eyes may cause severe burns. Wear protective clothing and a face shield.
  - If electrolyte gets on your skin, flush with water.
  - If electrolyte gets in your eyes, flush with water for at least 15 minutes and call a physician immediately.
- Electrolyte is poisonous.
  - If swallowed, drink large quantities of water or milk and call your local Poison Control Center or call a physician immediately.

NOTICE

- *Always turn OFF the ignition switch before disconnecting any electrical component.*
- *Some electrical components may be damaged if terminals or connectors are connected or disconnected while the ignition switch is turned "ON" and current is present.*

- This model comes with a maintenance free (MF) battery. Remember the following about MF batteries.
  - Use only the electrolyte that comes with the battery.
  - Use all of the electrolyte.
  - Seal the battery properly.
  - Never open the seals after installation.
- For extended storage, remove the battery, give it a full charge, and store it in a cool, dry space. For maximum service life, charge the stored battery every two weeks.
- For a battery remaining in a stored scooter, disconnect the negative battery cable from the battery terminal.
- The battery sealing caps should not be removed. Attempting to remove the sealing caps from the cells may damage the battery.
- The maintenance free (MF) battery must be replaced when it reaches the end of its service life.
- The battery can be damaged if overcharged or undercharged, or if left to discharge for long period. These same conditions contribute to shortening the "life span" of the battery. Even under normal use, the performance of the battery deteriorates after 2 – 3 years.
- Battery voltage may recover after battery charging, but under heavy load, the battery voltage will drop quickly and eventually die out. For this reason, the charging system is often suspected as the problem. Battery overcharge often results from problems in the battery itself, which may appear to be an overcharging symptom. If one of the battery cells is shorted and battery voltage does not increase, the regulator/rectifier supplies excess voltage to the battery. Under these conditions, the electrolyte level goes down quickly.
- Before troubleshooting the charging system, check for proper use and maintenance of the battery. Check if the battery is frequently under heavy load, such as having the headlight and taillight ON for long periods of time without riding the scooter.
- The battery will self-discharge when the scooter is not in use. For this reason, charge the battery every two weeks to prevent sulfation from occurring.
- When servicing the charging system, always follow the steps in the troubleshooting flow chart (page 19-5).
- For alternator service, refer to the following:
  - Alternator (page 13-8)

BATTERY CHARGING

- Turn the power ON/OFF at the charger, not at the battery terminal.
- For battery charging, do not exceed the charging current and time specified on the battery. Using excessive current or extending the charging time may damage the battery.
- Quick charging should only be done in an emergency; slow charging is preferred.

BATTERY TESTING

Refer to the instructions in the Operation Manual for the recommended battery tester for details about battery testing.
The recommended battery tester puts a “load” on the battery so the actual battery condition can be measured.

Recommended battery tester: BM-210 or BATTERY MATE or equivalent

SPECIFICATIONS

ITEM			SPECIFICATIONS
Battery	Capacity		12 V – 11 (10) Ah
	Current leakage		1.5 mA max.
	Voltage (20°C/68°F)	Fully charged	Above 12.8 V
		Needs charging	Below 12.3 V
	Charging current	Normal	1.1 A/5 – 10 h
		Quick	5.5 A/1.0 h
Alternator capacity			0.368 kW/5,000 min^{-1} (rpm)

TROUBLESHOOTING

BATTERY IS DAMAGED OR WEAK

1. BATTERY TEST

Remove the battery (page 19-6).

Check the battery condition using the recommended battery tester.

RECOMMENDED BATTERY TESTER:
BM210 or BATTERY MATE or equivalent

Is the battery in good condition?

YES – GO TO STEP 2.

NO – Faulty battery.

2. CURRENT LEAKAGE TEST

Install the battery (page 19-6).

Check the battery current leakage (Leak test; page 19-7).

Is the current leakage below 1.5 mA?

YES – GO TO STEP 4.

NO – GO TO STEP 3.

3. CURRENT LEAKAGE TEST WITHOUT REGULATOR/RECTIFIER

Disconnect the regulator/rectifier 5P connector and recheck the battery current leakage.

Is the current leakage below 1.5 mA?

YES – Faulty regulator/rectifier.

NO –
- Shorted wire harness.
- Faulty ignition switch.

4. CHARGING VOLTAGE INSPECTION

Measure and record the battery voltage using a digital multimeter (page 19-7).

Start the engine.

Measure the charging voltage.

Compare the measurement to result of the following calculation.

STANDARD: Measured BV < Measured CV < 15.5 V

- BV = Battery Voltage
- CV = Charging Voltage

Is the measured charging voltage within the standard voltage?

YES – Faulty battery.

NO – GO TO STEP 5.

5. ALTERNATOR CHARGING COIL INSPECTION

Check the alternator charging coil (page 19-8).

Is the alternator charging coil resistance within 0.1 – 1.0 Ω (20°C/68°F)

YES – GO TO STEP 6.

NO – Faulty charging coil.

6. REGULATOR/RECTIFIER SYSTEM INSPECTION

Check the voltage and resistance at the regulator/rectifier connector (page 19-8).

Are the results of checked voltage and resistance correct?

YES – Faulty regulator/rectifier.

NO –
- Open circuit in related wire.
- Loose or poor contacts of related terminal.
- Shorted wire harness.

BATTERY

REMOVAL/INSTALLATION

Always turn the ignition switch OFF before removing the battery.

Remove the maintenance lid (page 3-4).

Remove the bolts and battery holder plate.

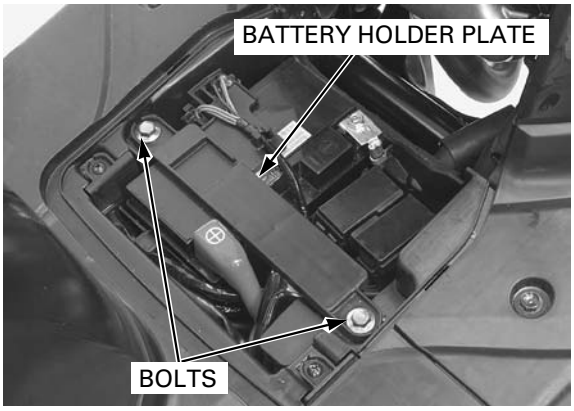

Disconnect the negative terminal first, then the positive terminal.

Remove the bolt and disconnect the negative (–) cable.
Remove the bolt and disconnect the positive (+) cable.
Remove the battery.

Connect the positive terminal first, then the negative terminal.

Install the battery in the reverse order of removal.

After installing the battery, coat the terminals with clean grease.

Install the maintenance lid (page 3-4).

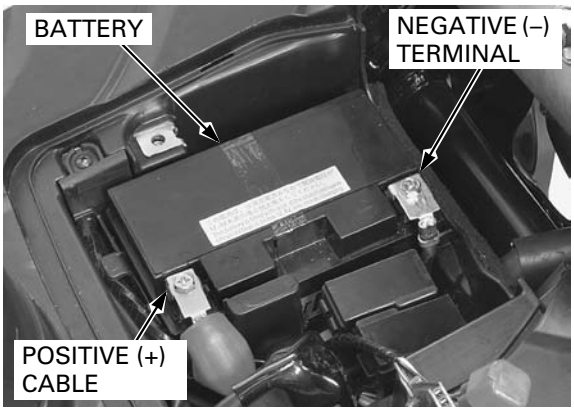

VOLTAGE INSPECTION

Remove the maintenance lid (page 3-4).

Measure the battery voltage using a digital multimeter.

VOLTAGE:
Fully charged: Above 12.8 V
Needs charging: Below 12.3 V

If the battery voltage is below 12.3 V, charge the battery.

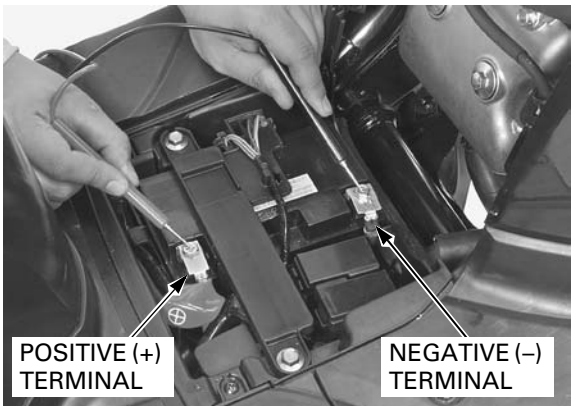

CHARGING SYSTEM INSPECTION

CURRENT LEAKAGE INSPECTION

Remove the maintenance lid (page 3-4).

Turn the ignition switch "OFF" and disconnect the negative (–) cable from the battery.

Connect the ammeter (+) probe to the battery (–) cable and the ammeter (–) probe to the battery (–) terminal.

With the ignition switch "OFF", check for current leakage.

- When measuring current using a tester, set it to a high range, and then bring the range down to an appropriate level. Current flow higher than the range selected may blow the fuse in the tester.
- While measuring current, do not turn the ignition switch "ON". A sudden surge of current may blow the fuse in the tester.

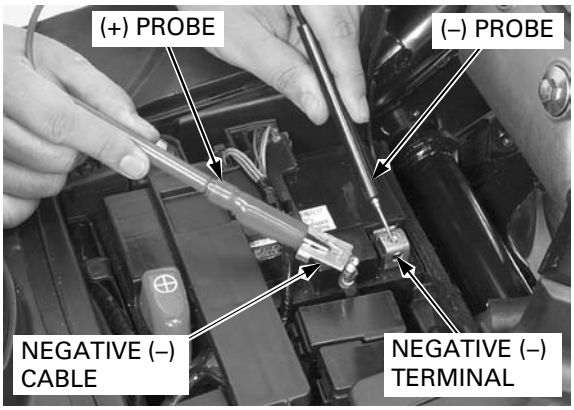

SPECIFIED CURRENT LEAKAGE: 1.5 mA max.

If current leakage exceeds the specified value, a shorted circuit is likely.
Locate the short by disconnecting connections one by one and measuring the current.

CHARGING VOLTAGE INSPECTION

- Make sure the battery is in good condition before performing this test.

Remove the maintenance lid (page 3-4).

Do not disconnect the battery or any cable in the charging system without first switching the ignition switch "OFF". Failure to do so can damage the tester or electrical components.

Warm up the engine to normal operating temperature.
Stop the engine and connect the multimeter as shown.
Measure and record the battery voltage using a multimeter.

- To prevent a short, make absolutely certain which are the positive and negative terminals or cable.

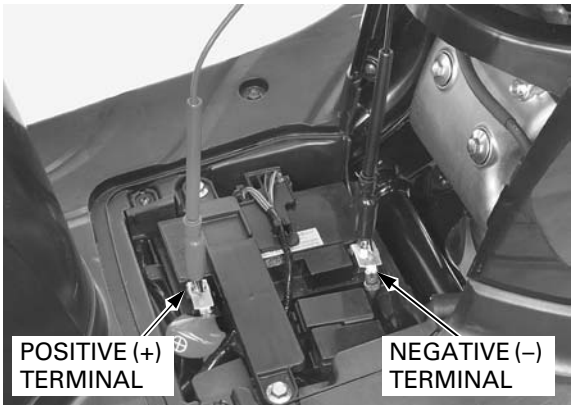

Restart the engine.
With the headlight on Hi beam, measure the charging voltage on the multimeter when the engine runs at 5,000 min^{-1} (rpm).

STANDARD:
Measured BV < Measured CV < 15.5 V

- BV = Battery Voltage
- CV = Charging Voltage

If the voltage is abnormal, checks in the troubleshooting flow chart (page 19-5).

ALTERNATOR

INSPECTION

Remove the luggage box (page 3-5).

Disconnect the alternator 3P connector.

Measure the resistance between each Yellow wire terminals.

STANDARD: 0.1 – 1.0 Ω (at 20°C/68°F)

Check for continuity between each wire terminal of the alternator/stator side connector and ground. There should be no continuity.

Replace the stator (page 13-8), if the resistance is out of specification, or if any wire has continuity to ground.

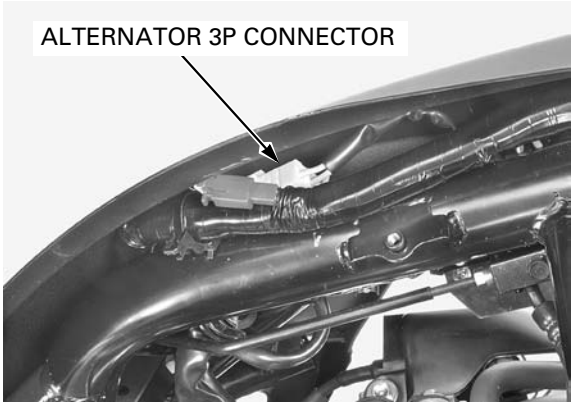

REGULATOR/RECTIFIER

WIRE HARNESS INSPECTION

Turn the ignition switch OFF.

Remove the body cover (page 3-6).

Disconnect the regulator/rectifier 3P (Black) connector, and check them for loose contact or corroded terminals.

Check the regulator/rectifier 3P connector terminals (wire harness side) as follows:

- Measure the voltage between the Red wire terminal (+) of the 3P (Black) connector and ground (–). There should be battery voltage at all time.
- Check for continuity between the Green wire terminal of the 3P (Black) connector and ground. There should be continuity at all time.

REMOVAL/INSTALLATION

Remove the body cover (page 3-6).

Disconnect the regulator/rectifier 3P connectors. Remove the mount bolts and regulator/rectifier.

Installation is in the reverse order of removal.

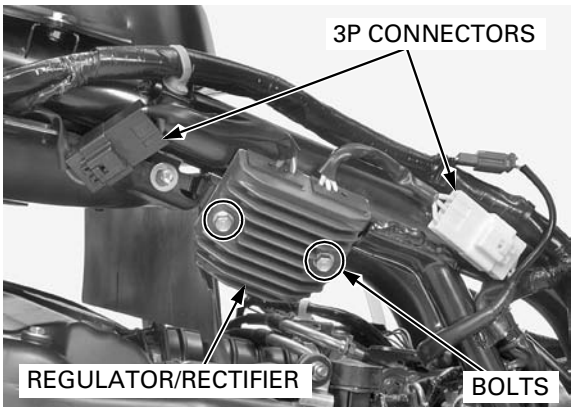

20. IGNITION SYSTEM

SYSTEM LOCATION 20-2

SYSTEM DIAGRAM 20-2

SERVICE INFORMATION 20-3

TROUBLESHOOTING 20-4

IGNITION SYSTEM INSPECTION 20-5

IGNITION COIL 20-8

IGNITION TIMING 20-8

SYSTEM LOCATION

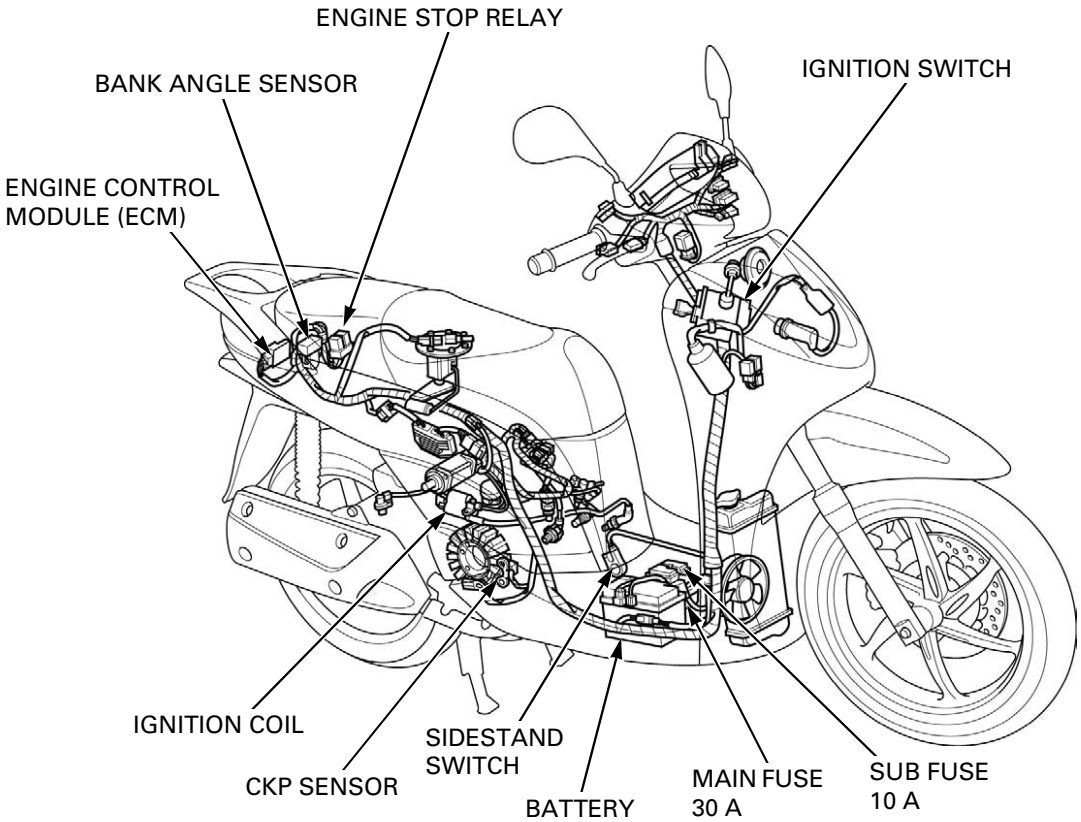

SYSTEM DIAGRAM

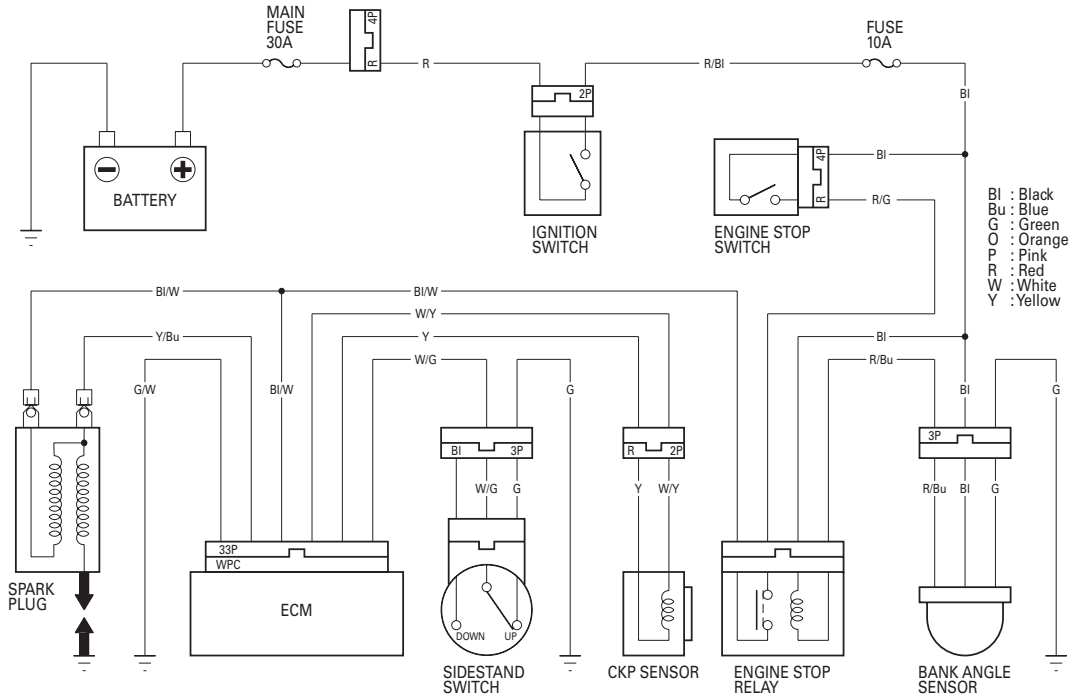

SERVICE INFORMATION

GENERAL

- Some electrical components may be damaged if terminals or connectors are connected or disconnected while the ignition switch is turned to ON and current is present.
- When servicing the ignition system, always follow the steps in the troubleshooting sequence on page 20-4.
- This scooter's Ignition Control Module (ICM) is built into the Engine Control Module (ECM).
- The ignition timing cannot be adjusted since the ECM is factory preset.
- The ECM may be damaged if dropped. Also, if the connector is disconnected when current is flowing, the excessive voltage may damage the ECM. Always turn the ignition switch to OFF before servicing.
- A faulty ignition system is often related to poor connections. Check those connections before proceeding.
- Make sure the battery is adequately charged. Using the starter motor with a weak battery results in a slower engine cranking speed as well as no spark at the spark plug.
- Use a spark plug of the correct heat range. Using a spark plug with an incorrect heat range can damage the engine.
- For ignition switch servicing (page 22-16).
- For CKP sensor removal/installation (page 13-8).

SPECIFICATIONS

ITEM	SPECIFICATIONS
Spark plug	LMAR8A-9 (NGK)
Spark plug gap	0.8 – 0.9 mm (0.03 – 0.04 in)
Ignition coil primary peak voltage	100 V minimum
Crankshaft position (CKP) sensor peak voltage	0.7 V minimum
Ignition timing ("F" mark)	10° BTDC at idle

TORQUE VALUE

Timing hole cap	6 N·m (0.6 kgf·m, 4.4 lbf·ft)	Apply engine oil to the threads and seating surface

TOOLS

Imrie diagnostic tester (model 625) Peak voltage adaptor 07HGJ-0020100 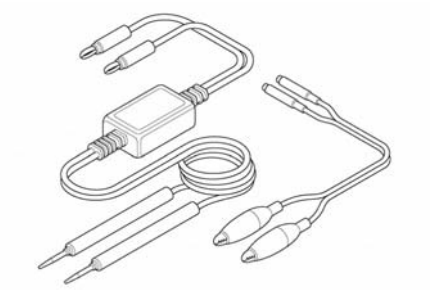 with commercially available digital multimeter (impedance 10 MΩ/DCV minimum)	Test probe 07ZAJ-RDJA110 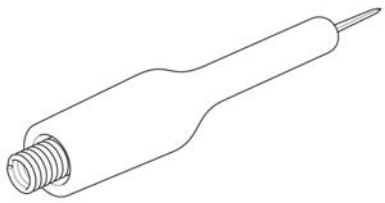

TROUBLESHOOTING

- Inspect the following before diagnosing the system.
  - Faulty spark plug
  - Loose spark plug cap or spark plug wire connection
  - Water got into the spark plug cap (leaking the ignition coil secondary voltage)
- "Initial voltage" of the ignition primary coil is the battery voltage with the ignition switch turned to ON (The engine is not cranked by the starter motor).

NO SPARK AT PLUG

Unusual condition		Probable cause (Check in numerical order)
Ignition coil primary voltage	No initial voltage with ignition switch turned to ON (Other electrical components are normal)	1. An open circuit in Black/White wire between the ignition coil and engine stop relay. 2. An open circuit or loose connection in engine stop relay related circuit or faulty engine stop relay. 3. Loose or poor contact of the ignition coil primary wire terminal, or an open circuit in primary coil. 4. Faulty ECM (when the initial voltage is normal with the ECM connector disconnected).
	Initial voltage is normal, but it drops down to 2 – 4 V while cranking the engine.	1. Incorrect peak voltage adaptor connections. 2. Cranking speed is too slow. (Battery is undercharged.) 3. No voltage between the Black/White (+) and body ground (–) at the ECM connector or loosen ECM connector. 4. An open circuit or loose connection in Green/White wire of the ECM. 5. An open circuit or loose connection in Yellow/Blue wire between the ignition coil and ECM. 6. Short circuit in the ignition primary coil. 7. Faulty sidestand switch. 8. Loose or poor connection or an open circuit in sidestand switch White/Green wire. 9. Faulty CKP sensor (measure the peak voltage). 10. Faulty ECM (when above No.1 – 9 are normal).
	Initial voltage is normal, but no peak voltage while cranking the engine.	1. Incorrect peak voltage adaptor connections. 2. Faulty peak voltage adaptor. 3. Faulty ECM (when above No.1 and 2 are normal).
	Initial voltage is normal, but peak voltage is lower than standard value.	1. The multimeter impedance is too low; below 10 MΩ/DCV. 2. Cranking speed is too slow. (Battery is undercharged.) 3. The sample timing of the tester and measured pulse were not synchronized. (System is normal if measured voltage is over the standard voltage at least once.) 4. Faulty ignition coil. 5. Faulty ECM (when above No.1 – 4 are normal).
	Initial and peak voltage are normal, but no spark jumps at plug.	1. Faulty spark plug or leaking ignition coil secondary current ampere. 2. Faulty ignition coil.
Crankshaft position (CKP) sensor	Peak voltage low	1. The multimeter impedance is too low; below 10 MΩ/DCV. 2. Cranking speed is too slow. (Battery is undercharged.) 3. The sampling timing of the tester and measured pulse were not synchronized. (System is normal if measured voltage is over the standard voltage at least once.) 4. Faulty CKP sensor (when above No. 1 – 3 are normal).
	No peak voltage.	1. Faulty peak voltage adaptor. 2. Faulty CKP sensor.

IGNITION SYSTEM INSPECTION

- If there is no spark present at the plug, check all connections for loose or poor contact before measuring the peak voltage.
- Use a commercially available digital multimeter (impedance 10 MΩ/DCV minimum).
- The display value differs depending upon the internal impedance of the multimeter.
- If the Imrie diagnostic tester (model 625) is used, follow the manufacturer's instruction.

Connect the peak voltage adapter to the digital multimeter, or use the peak voltage tester.

TOOLS:
Imrie diagnostic tester (model 625) or
Peak voltage adaptor 07HGJ-0020100
with commercially available digital multimeter (impedance 10 MΩ/DCV minimum)

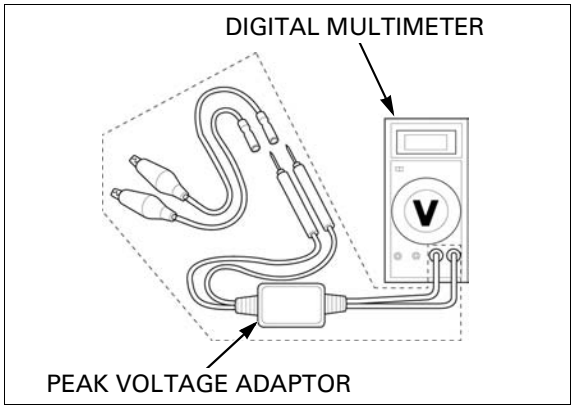

IGNITION COIL PRIMARY PEAK VOLTAGE

- Check all system connections before this inspection. Poor connected connectors can cause incorrect readings.

Remove the maintenance lid (page 3-4).

Disconnect the spark plug cap from the spark plug.

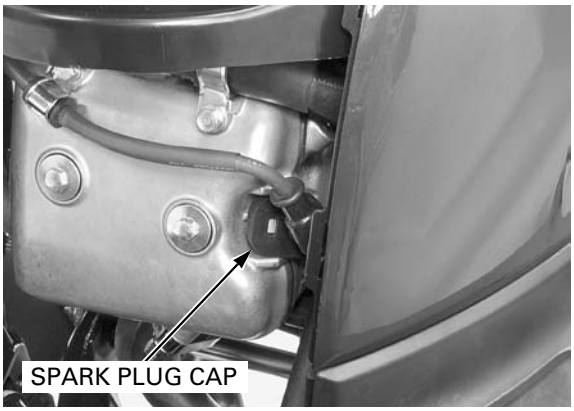

Connect a known-good spark plug to the spark plug cap and ground it to the cylinder as done in a spark test.

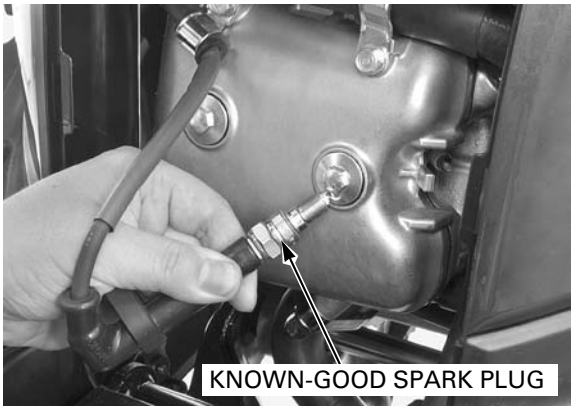

With the ignition coil primary wire connected, connect the Imrie diagnostic tester or peak voltage adaptor probes to the ignition coil primary terminal and ground.

TOOLS:
Imrie diagnostic tester (model 625) or
Peak voltage adaptor 07HGJ-0020100
with commercially available digital multimeter (impedance 10 MΩ/DCV minimum)

CONNECTION: Yellow/Blue (+) – Ground (–)

Turn the ignition switch "ON" with the engine stop switch at "".
Measure the initial voltage at this time.

STANDARD: Battery voltage

If the initial voltage cannot be measured, check each item in the troubleshooting chart (page 20-4).

Retract the sidestand.
Turn the ignition switch "ON" and squeeze the rear brake lever fully.
Crank the engine with the starter switch and measure the ignition coil primary peak voltage.

PEAK VOLTAGE: 100 V minimum

If the peak voltage is abnormal, check each item in the troubleshooting chart (page 20-4).

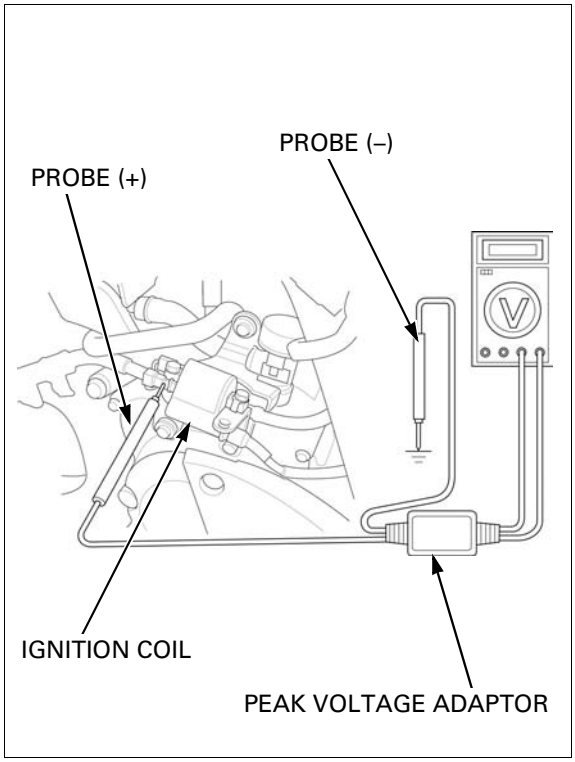

CKP SENSOR PEAK VOLTAGE

- Check all system connections before this inspection. Poor connected connectors can cause incorrect readings.

Remove the rear fender A (page 3-7).

Turn the ignition switch "OFF".
Disconnect the ECM 33P connector.

Connect the Imrie diagnostic tester or peak voltage adaptor probes to the ECM connector terminals.

TOOLS:
Imrie diagnostic tester (model 625) or
Peak voltage adaptor 07HGJ-0020100
with commercially available digital multimeter (impedance 10 MΩ/DCV minimum)
Test probe 07ZAJ-RDJA110

CONNECTION: Yellow (+) – White/Yellow (–)

Retract the sidestand.
Turn the ignition switch "ON" with the engine stop switch at "" and squeeze the rear brake lever fully.
Crank the engine with the starter switch and measure the CKP sensor peak voltage.

PEAK VOLTAGE: 0.7 V minimum

If the peak voltage measured at the ECM connector is abnormal, measure the peak voltage at the CKP sensor connector.

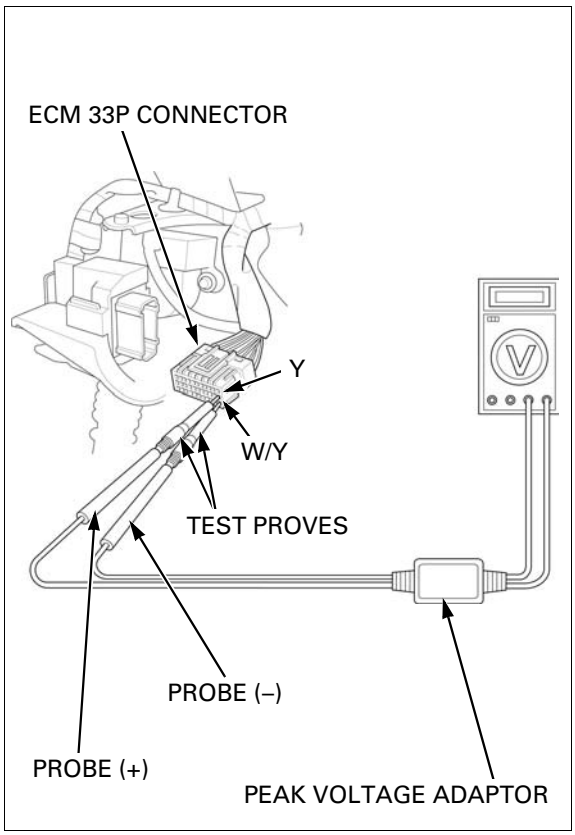

Turn the ignition switch "OFF".

Disconnect the CKP sensor 2P (Red) connector.

Connect the Imrie diagnostic tester or peak voltage adaptor probes to the CKP sensor side connector terminals.
In the same manner as at the ECM connector, measure the peak voltage and compare it to the voltage measured at the ECM connector.

- If the peak voltage measured at the ECM is abnormal and the one measured at the CKP sensor is normal, the wire harness has an open or short circuit, or loose connection.
- If both peak voltages are abnormal, check each item in the troubleshooting chart (page 20-4).
  For CKP sensor replacement (page 13-8).

Install the removed parts in the reverse order of removal.

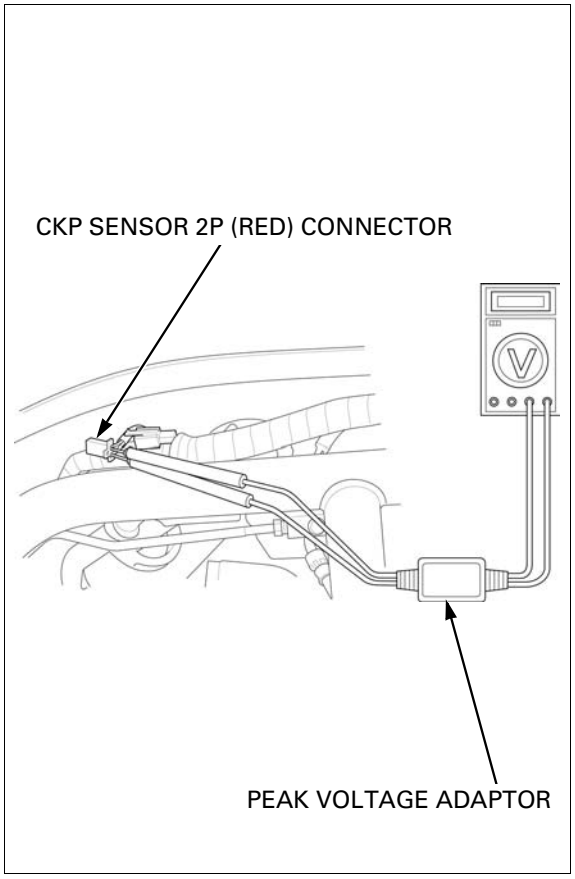

SIDESTAND SWITCH LINE

Remove the rear fender A (page 3-7).

Turn the ignition switch "OFF".
Disconnect the ECM 33P connector.

Retract the sidestand.
Turn the ignition switch "ON" and measure the voltage between the ECM connector of the wire harness side and ground.

TOOL:
Test probe **07ZAJ-RDJA110**

CONNECTION: White/Green – Ground

STANDARD: 4.75 – 5.25 V

If the standard voltage measured at the ECM connector is abnormal, check for open circuit in White/Green wire.

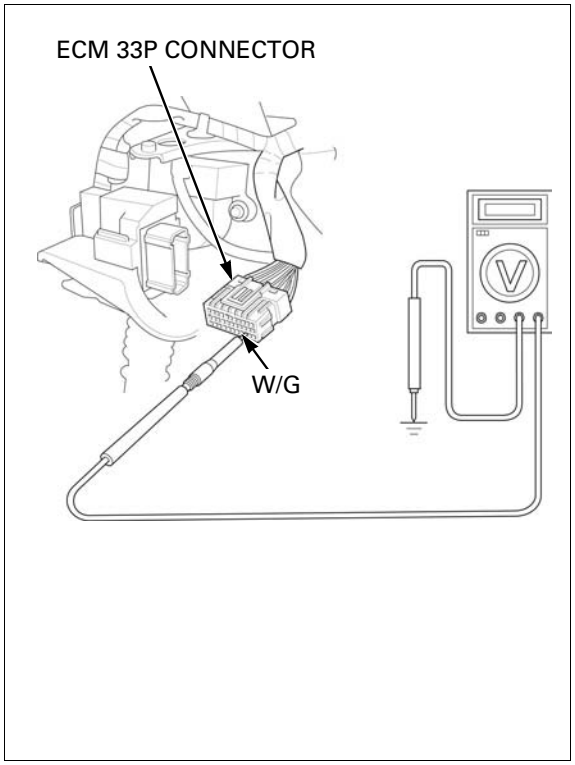

IGNITION COIL

REMOVAL/INSTALLATION

Remove the maintenance lid (page 3-4).

Disconnect the spark plug cap.
Remove the spark plug wire clamp bolt.
Remove the wire band boss from the wire stay.

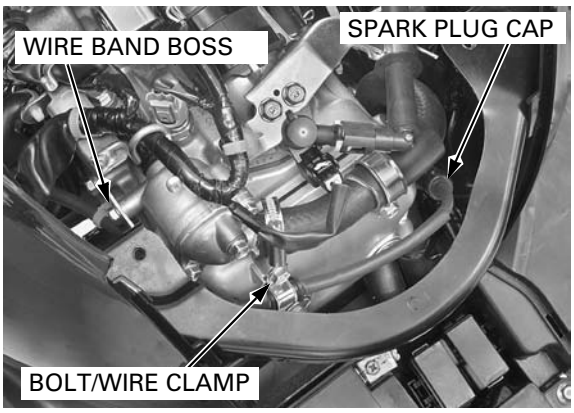

Disconnect the ignition coil wire connectors.
Remove the bolts, set plates and ignition coil.

Installation is in the reverse order of removal.

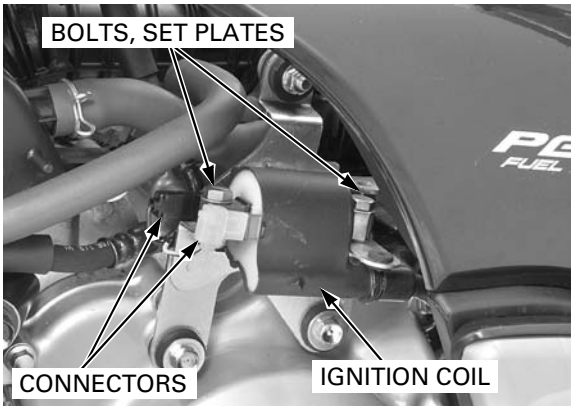

IGNITION TIMING

Start the engine and warm it up operating temperature.
Stop the engine and remove the timing hole cap from the right crankcase cover.

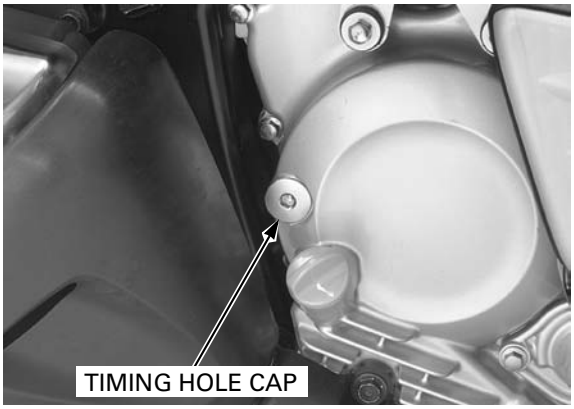

Read the instructions for timing light operation.

Connect the timing light to the spark plug wire.

Start the engine, let it idle and check the ignition timing.

The ignition timing is correct if the “F” mark on the flywheel aligns with the index mark on the right crankcase cover at idle.

Increase the engine speed and make sure the “F” mark begins to move.

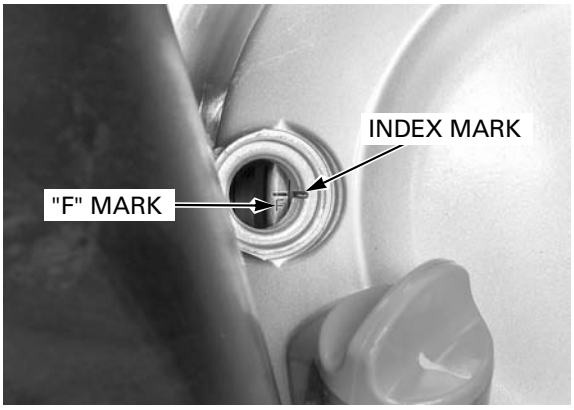

Apply engine oil to the timing hole cap threads and seating surface.
Coat a new O-ring with engine oil and install it onto the timing hole cap.

Install the timing hole cap and tighten it.

TORQUE: 6 N·m (0.6 kgf·m, 4.4 lbf·ft)

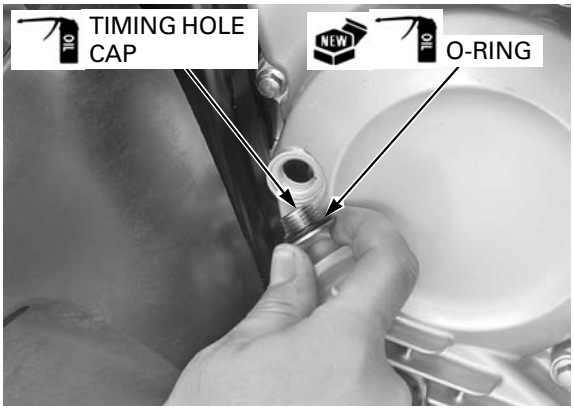

MEMO

21. ELECTRIC STARTER

SYSTEM LOCATION 21-2

SYSTEM DIAGRAM 21-2

SERVICE INFORMATION 21-3

TROUBLESHOOTING 21-4

STARTER MOTOR 21-6

STARTER RELAY 21-14

SYSTEM LOCATION

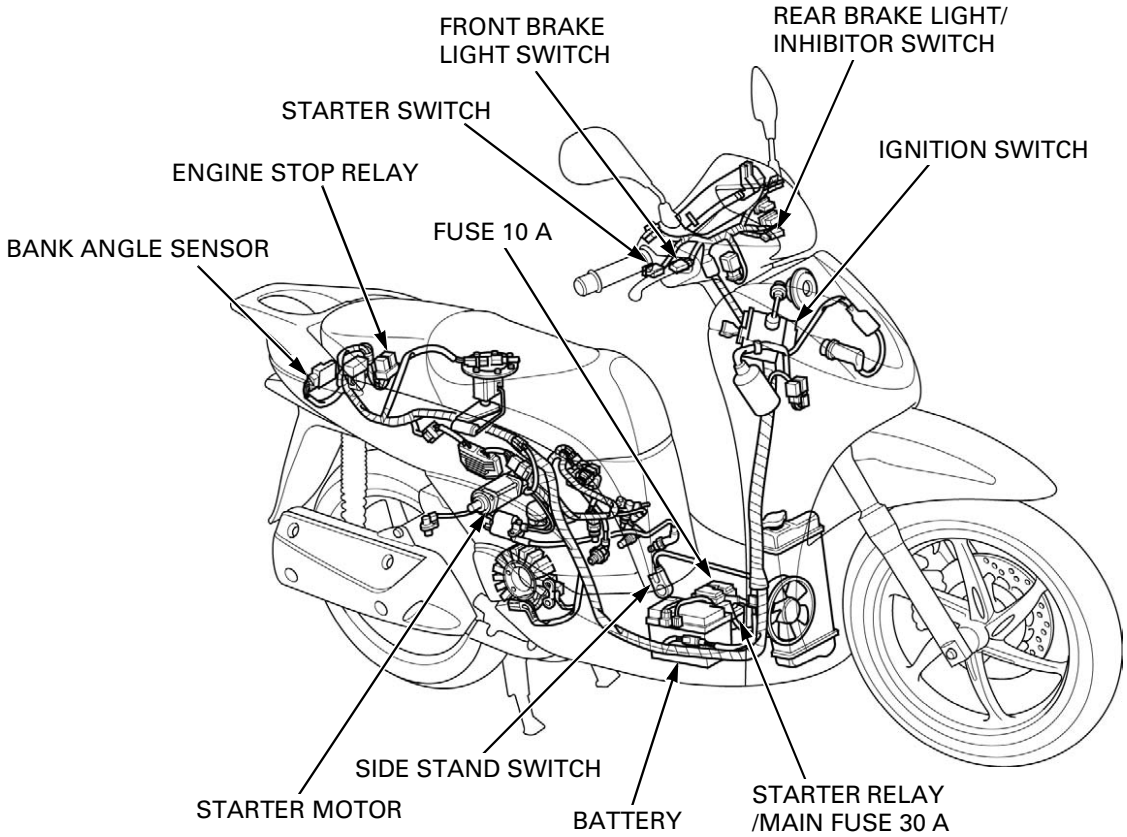

SYSTEM DIAGRAM

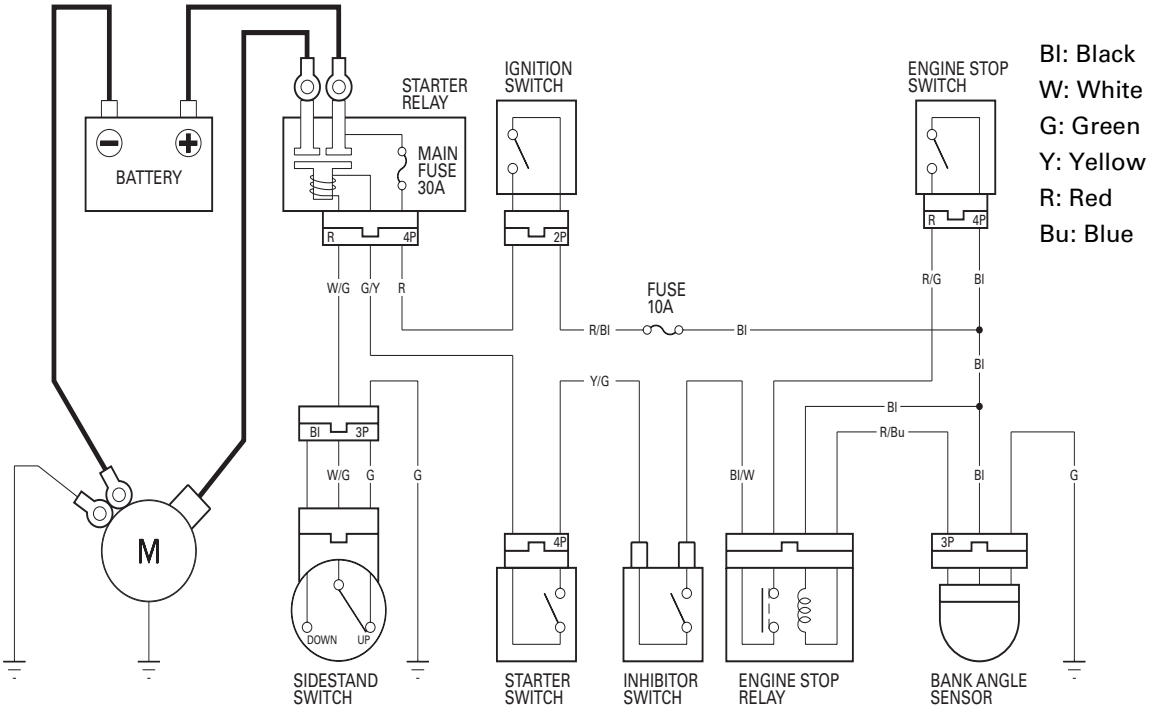

SERVICE INFORMATION

GENERAL

- Always turn the ignition switch to OFF before servicing the starter motor. The motor could suddenly start, causing serious injury.
- A weak battery may be unable to turn the starter motor quickly enough, or supply adequate ignition current.
- The starter motor can be serviced with the engine in the frame.
- When checking the starter system, always follow the steps in the troubleshooting (page 21-4).
- If the current is kept flowing through the starter motor to turn it while the engine is not cranking over, the starter motor may be damaged.
- For starter clutch servicing (page 13-9).
- Inspect the following:
  - Inhibitor switch (page 22-19)
  - Starter switch (page 22-18)
  - Sidestand switch (page 22-20)

SPECIFICATION

Unit: mm (in)

ITEM	STANDARD	SERVICE LIMIT
Starter motor brush length	10.0 – 10.5 (0.39 – 0.41)	6.5 (0.26)

TORQUE VALUES

Starter motor cable terminal nut	10 N·m (1.0 kgf·m, 7 lbf·ft)
Starter motor cover bolt	4.9 N·m (0.5 kgf·m, 3.6 lbf·ft)
Starter motor negative brush screw	3.7 N·m (0.4 kgf·m, 2.7 lbf·ft)

TROUBLESHOOTING

Starter motor does not turn

1. **Standard Inspection**

   Check the following:

   – Battery condition
   – Burned fuse

   Are the above items in good condition?

   YES – Replace or repair the malfunction part(s).

   NO – GO TO STEP 2.

2. **Starter Relay Operation**

   Retract the sidestand.
   Turn the ignition switch "ON" with the engine stop switch at "".
   Squeeze the rear brake lever fully and push the starter switch.
   You should hear the relay "CLICK" when the starter switch is depressed.

   Is the "CLICK" heard?

   YES – GO TO STEP 3.

   NO – GO TO STEP 5.

3. **Starter Motor Inspection**

   Turn the ignition switch "OFF".
   Apply battery voltage to the starter motor directly and check the operation. (A large amount of current flows, so do not use a thin wire.)

   Does the starter motor turn?

   YES – GO TO STEP 4.

   NO – Inspect the starter motor (page 21-9).

4. **Starter Relay Continuity Inspection**

   Check the starter relay for continuity (page 21-15).

   Is there continuity?

   YES –
   - Loose or poorly connected starter motor cable.
   - Loose or poorly connected starter relay connector terminal.
   - Open circuit in starter motor ground cable.
   - Open circuit in Red wire between the battery and starter relay.
   - Open circuit in Red wire between the starter relay and starter motor.

   NO – Faulty starter relay.

5. **Starter Relay Coil Power Input Line Inspection**

   Check the starter relay coil power input line inspection (page 21-14)

   Is the power input line normal?

   NO –
   - Loose or poorly connected connector.
   - Inspect the starter switch (page 22-18).
   - Inspect the inhibitor switch (page 22-19).
   - Open circuit in Green/Yellow wire between the starter relay and starter switch.
   - Open circuit in Yellow/Green wire between the starter switch and inhibitor switch.
   - Inspect the engine stop relay (page 6-67).

   YES – GO TO STEP 6.

6. Starter Relay Coil Ground Line Inspection

Check the starter relay coil ground line inspection (page 21-15).

Is the ground line normal?

YES – Replace the starter relay with a new one, and recheck.

NO –
- Loose or poorly connected connector.
- Open circuit in White/Green wire and/or Green wire between the starter relay and sidestand switch.
- Inspect the sidestand switch

Starter motor turns engine slowly
- Low battery voltage
- Poorly connected battery cable
- Poorly connected starter motor cable
- Faulty starter motor
- Poor connected ground cable

Starter motor turns, but engine does not turn
- Faulty starter clutch
- Damaged or faulty starter drive gear

Starter Relay *"CLICK"*, but engine does not turn over
- Crankshaft does not turn due to engine problems

STARTER MOTOR

REMOVAL

Remove the following:

- Belt case air cleaner cover (page 4-16)
- Air cleaner housing (page 6-52)

Open the rubber cap and remove the terminal nut. Disconnect the starter motor cable.

Remove the two mounting bolts, ground cables.

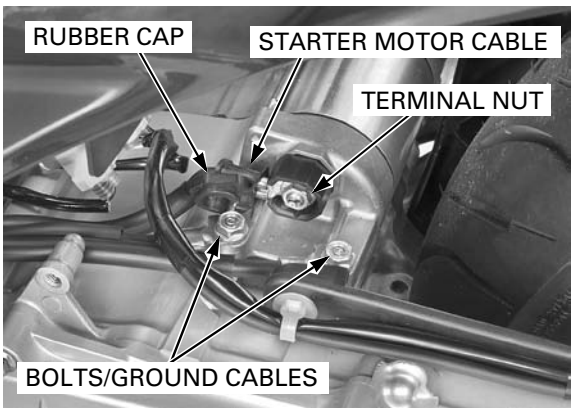

Remove the starter motor from the crankcase.
Remove the O-ring from the starter motor.

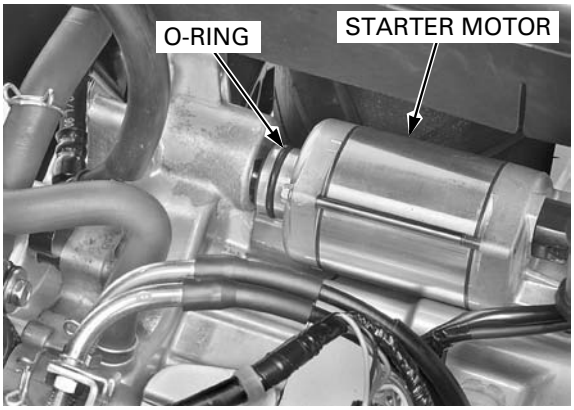

DISASSEMBLY/INSPECTION

Remove the bolts.

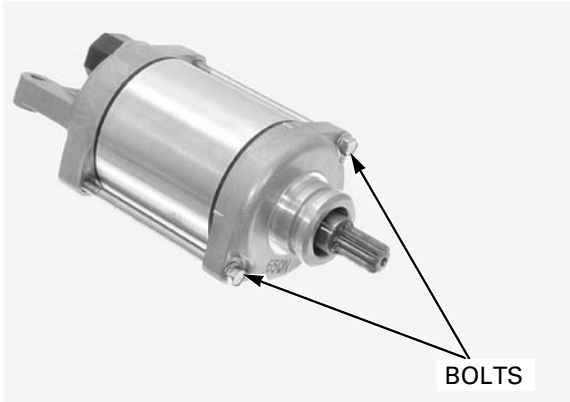

Remove the front cover and O-ring from the starter motor case.

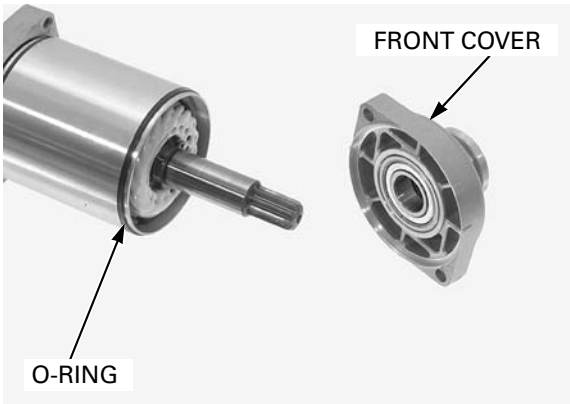

Remove the starter motor case/armature from the rear cover.

Remove the O-ring from the starter motor case. Remove the armature from the motor case.

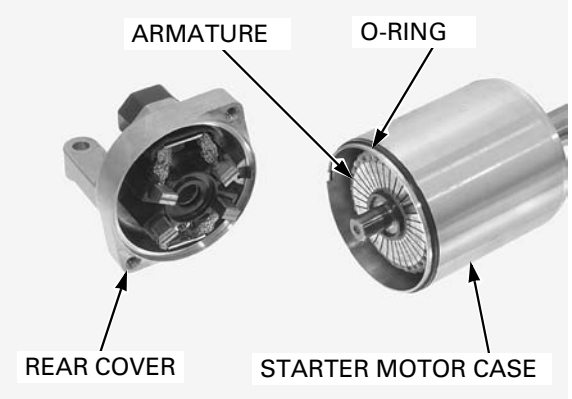

Remove the brushes and springs from the brush holder.

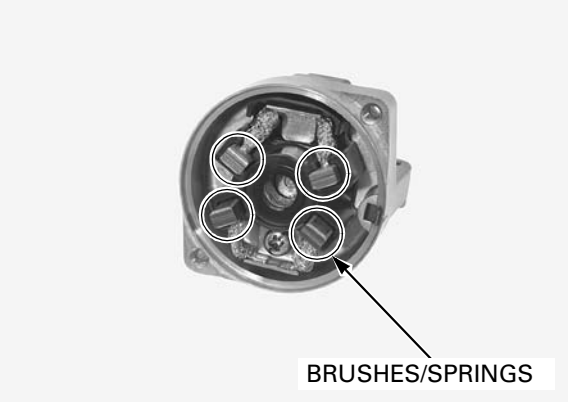

Check for continuity between starter motor cable terminal and positive brushes.

There should be continuity.

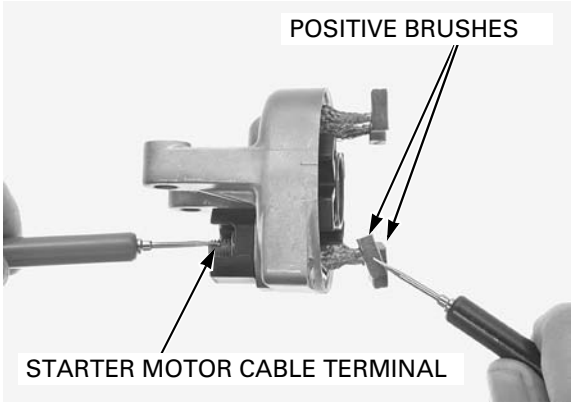

Check for continuity between positive brushes and rear cover.

There should be no continuity.

Check for continuity between positive and negative brushes.

There should be no continuity.

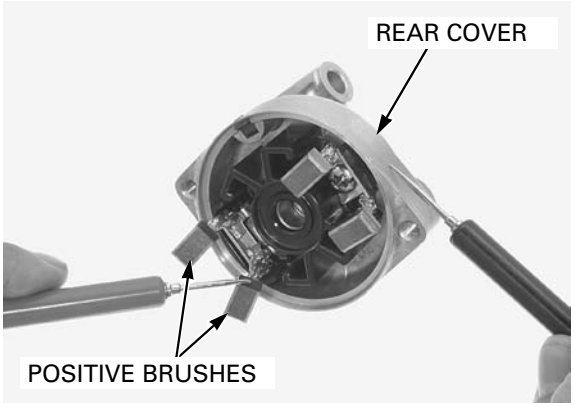

Remove the screw and negative brushes.

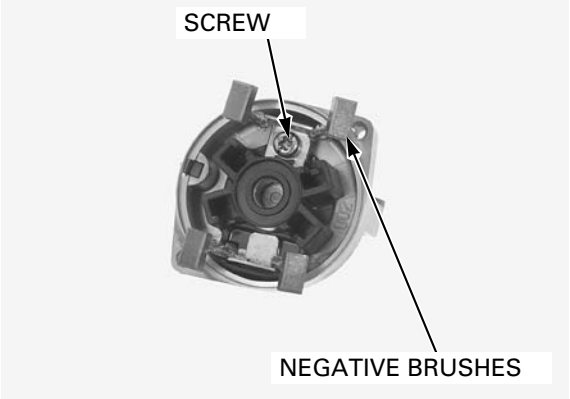

Remove the terminal nut.

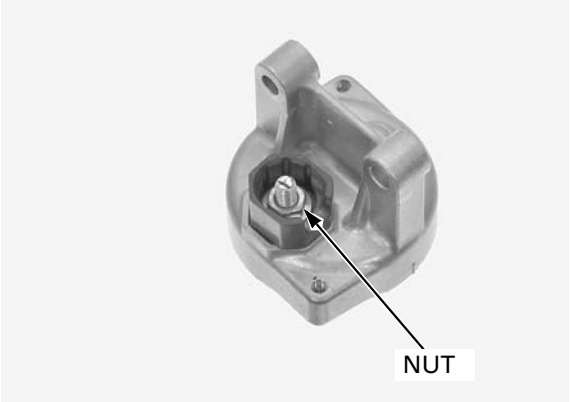

Remove the washer, insulator, terminal stopper and O-ring.

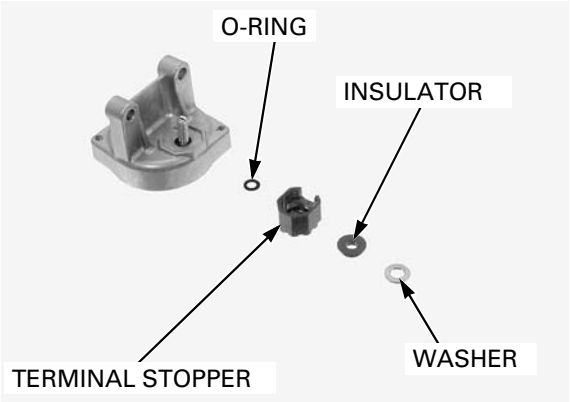

Remove the terminal bolt, positive brushes and brush holder.

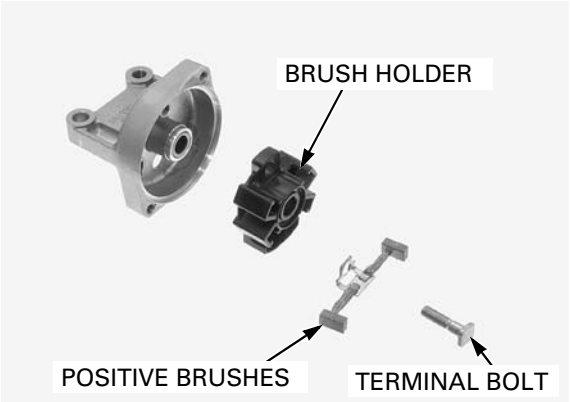

INSPECTION

Measure each brush length.

SERVICE LIMIT: 6.5 mm (0.26 in)

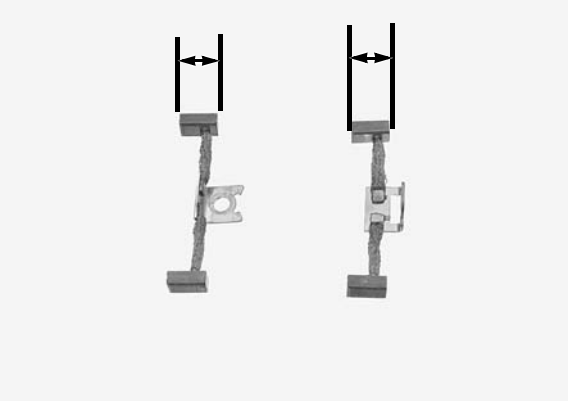

Check the commutator for damage or abnormal wear.

Do not use emery or sand paper on the commutator.

Check the commutator bar for discoloration.
Clean the metallic debris off between commutator bars.

Replace the armature with a new one if necessary.

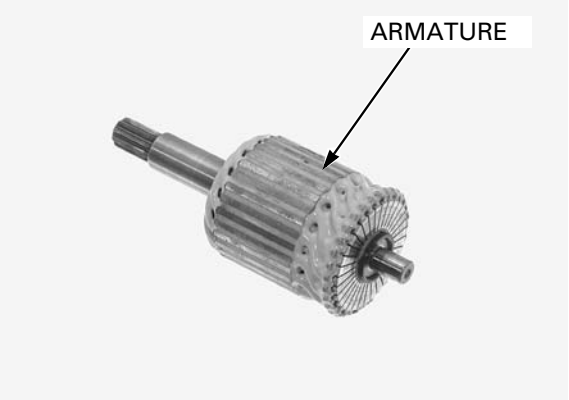

Check for continuity between pairs of commutator bars.
There should be continuity.

Check for continuity between each individual commutator bar and the armature shaft.
There should be no continuity.

Check the dust seal and needle bearing for wear or damage.
Check the ball bearing rotates smoothly.

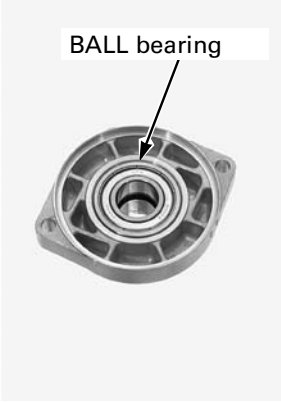

Check the bushing of the rear cover for wear or damage.

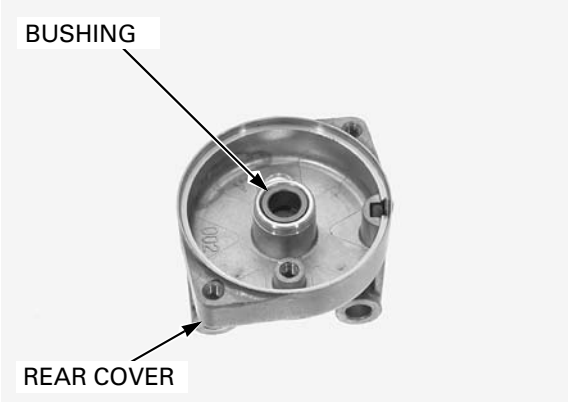

ASSEMBLY

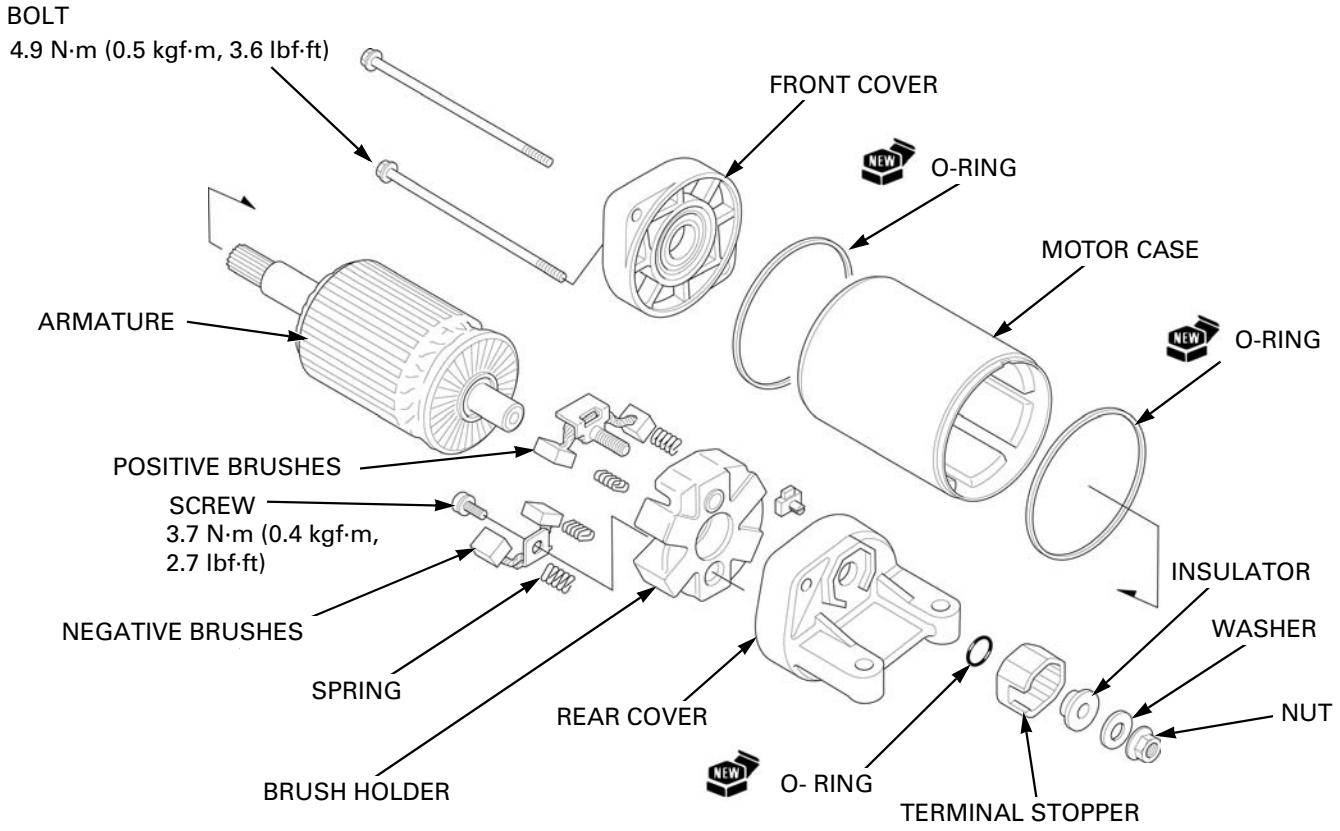

Install the brush holder, positive brushes and terminal bolt.

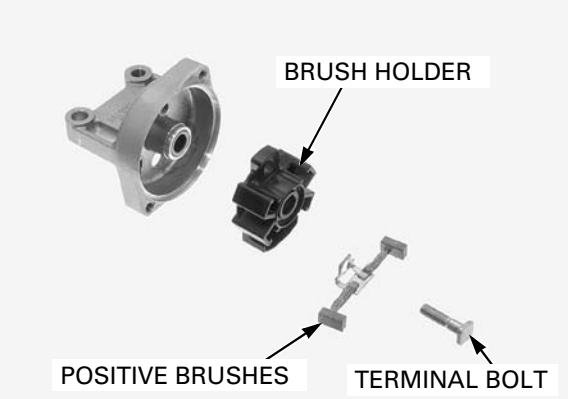

Install a new O-ring, terminal stopper, insulator and washer.

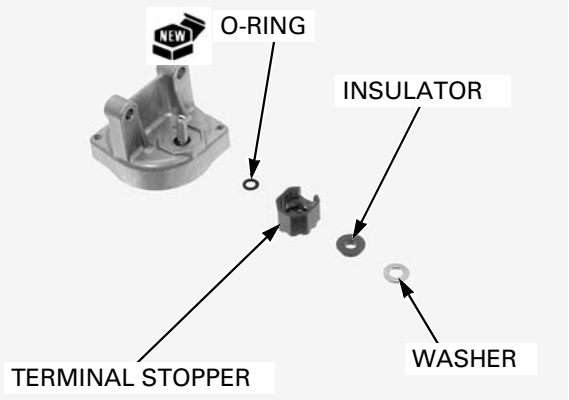

Install and tighten the terminal nut securely.

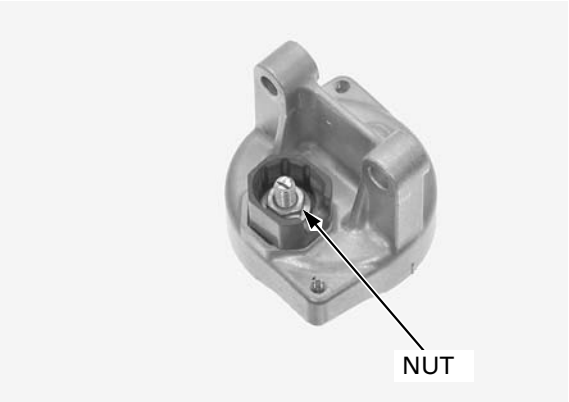

Install the negative brushes and tighten the screw to the specified torque.

TORQUE: 3.7 N·m (0.4 kgf·m, 2.7 lbf·ft)

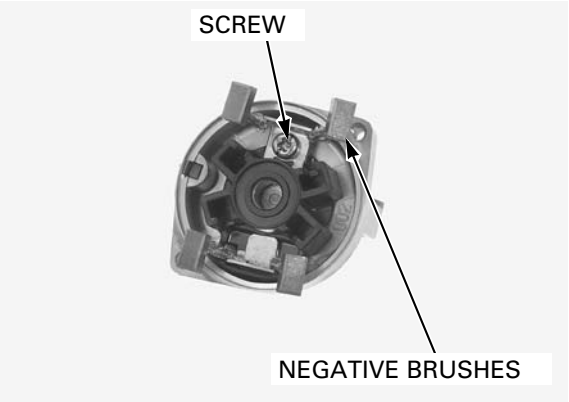

Install the brush springs to the brush holder grooves.

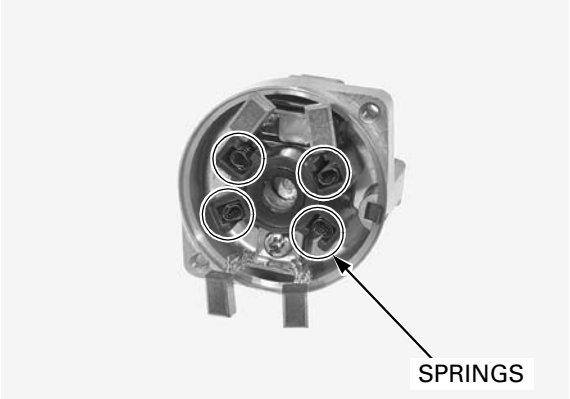

Install the brushes to the brush holder.

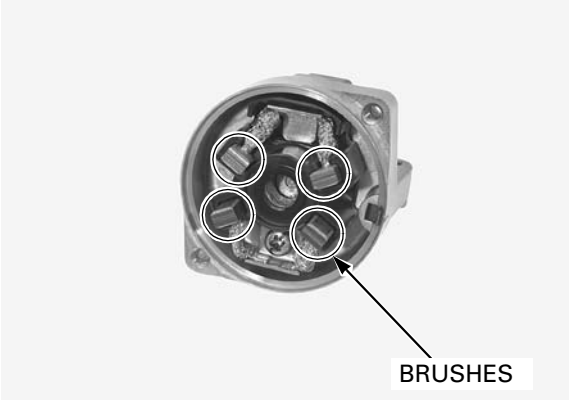

Install the armature to the starter motor case.

NOTICE

The coil may be damaged if the magnet pulls the armature against the case.

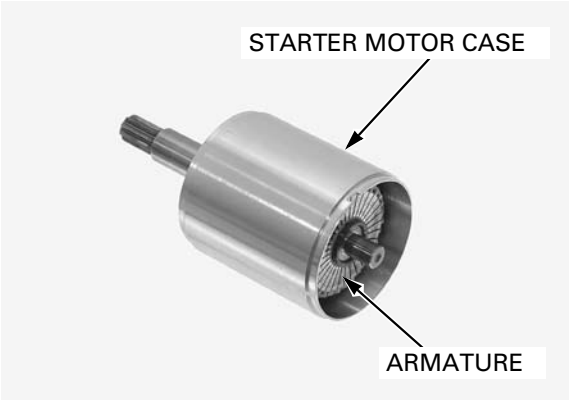

Install a new O-ring to the starter motor case.
Install the starter motor case by aligning the starter motor case groove with the stopper on the rear cover assembly.

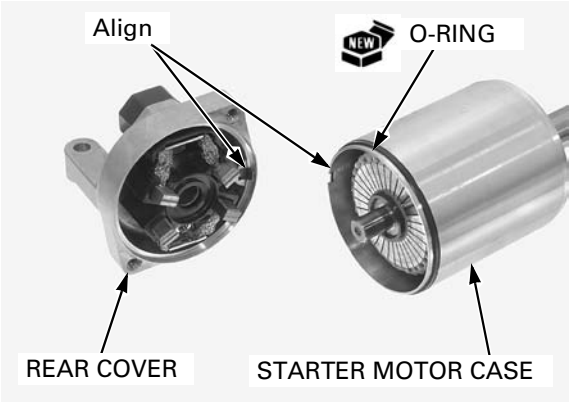

Install a new O-ring to the starter motor case.
Install the front cover to the starter motor case.

NOTICE

When installing the front cover, take care to prevent damaging the oil seal lip with the armature shaft.

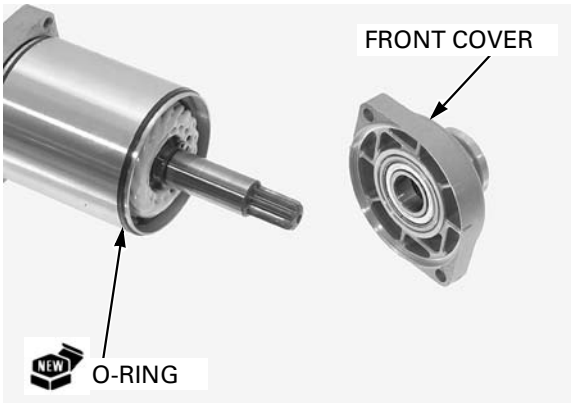

Align the index marks on the front cover, starter motor case and rear cover.

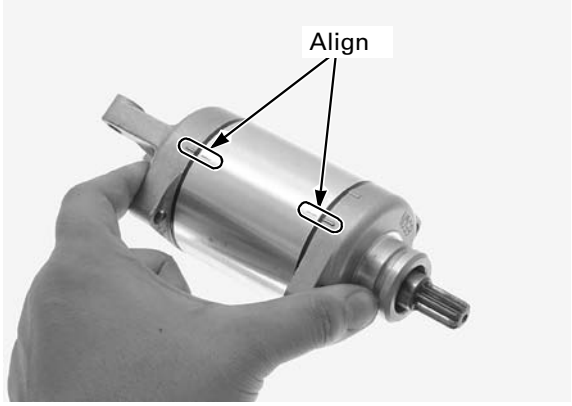

Install a new O-rings to the bolts.
Install and tighten the bolts to the specified torque.

TORQUE: 4.9 N·m (0.5 kgf·m, 3.6 lbf·ft)

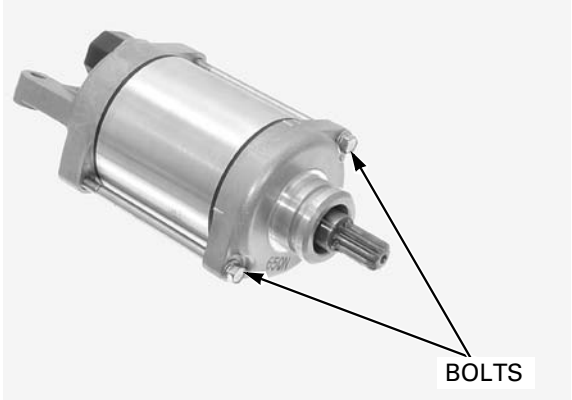

INSTALLATION

Apply oil to a new O-ring and install it to the starter motor groove.

Route the cable properly (page 1-19).

Install the starter motor to the crankcase.

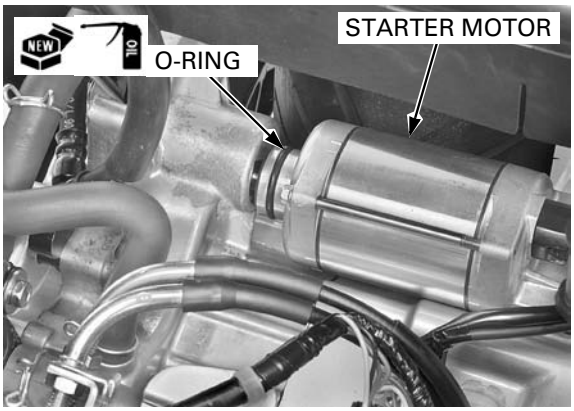

Connect the ground cables and tighten the two mounting bolts.

Connect the starter motor cable.
Install and tighten the terminal nut to the specified torque.

TORQUE: 10 N·m (1.0 kgf·m, 7 lbf·ft)

Install the rubber cap properly.

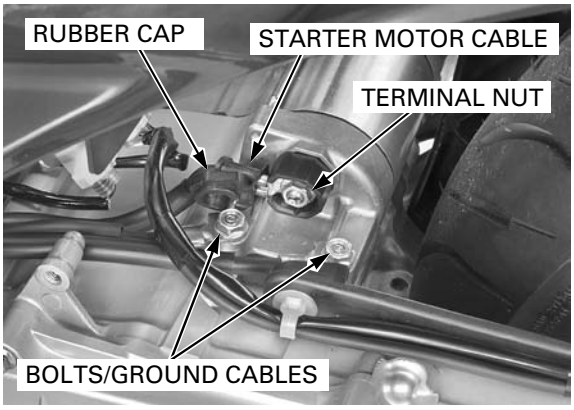

STARTER RELAY

OPERATION INSPECTION

Remove the maintenance lid (page 3-4).

Retract the sidestand.
Turn the ignition switch "ON" with the engine stop switch at "".
Squeeze rear brake lever fully and push the starter switch.
The coil is normal if the starter relay clicks.

If you hear the starter relay "CLICK", but starter motor does not turn, inspect the starter relay (page 21-15).

If you do not hear the starter relay "CLICK", inspect the starter relay circuits (page 21-14).

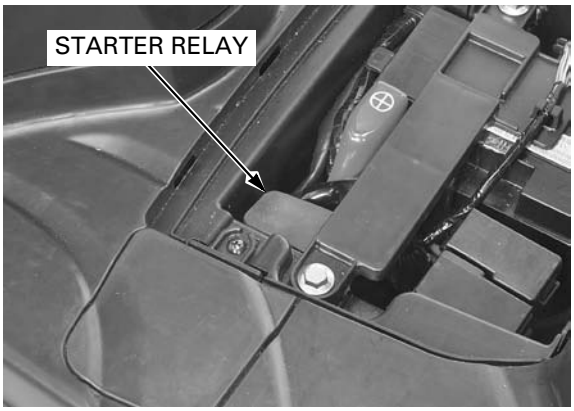

CIRCUIT INSPECTION

RELAY COIL POWER INPUT LINE

Remove the maintenance lid (page 3-4).

Turn the engine stop switch "".
Release the connector cover.
Measure the voltage between the starter relay 4P (Red) connector terminal and ground with the ignition switch turned to ON.

CONNECTION: Green/Yellow (+) – Ground (–)

There should be battery voltage only when the rear brake lever squeezed and the starter switch is pushed.

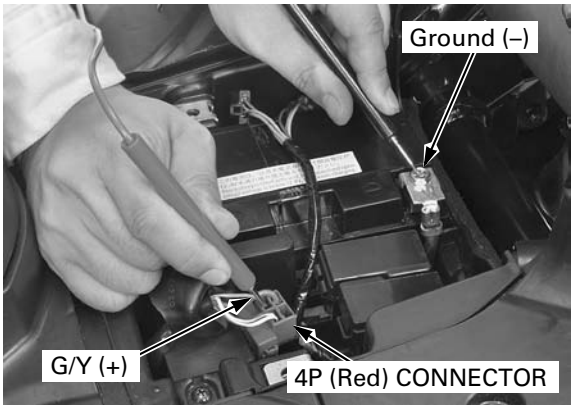

GROUND LINE

Remove the maintenance lid (page 3-4).

Turn the ignition switch to OFF.
Release the connector cover and disconnect the starter relay 4P (Red) connector.
Check for continuity between the wire harness side connector terminal and ground.

CONNECTION: White/Green – Ground

There should be continuity when the sidestand retracted.

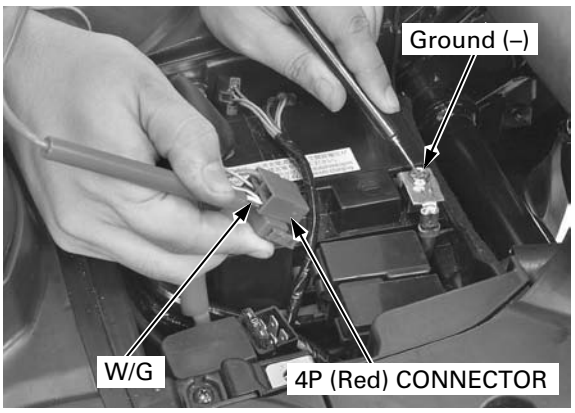

CONTINUITY INSPECTION

Remove the maintenance lid (page 3-4).

Turn the ignition switch to OFF.
Disconnect the negative (–) cable from the starter relay.
Disconnect the starter relay 4P (Red) connector.
Remove the battery (+) cable and starter motor cable from the starter relay.

Connect the fully charged 12 V battery positive (+) terminal to the terminal "A" and negative (–) terminal to the terminal "B" of the starter relay.

Connect the ohmmeter probes to the starter relay 4P connector terminal "C" and "D".

There should be continuity between the cable terminals while the battery is connected, and no continuity when the battery is disconnected.

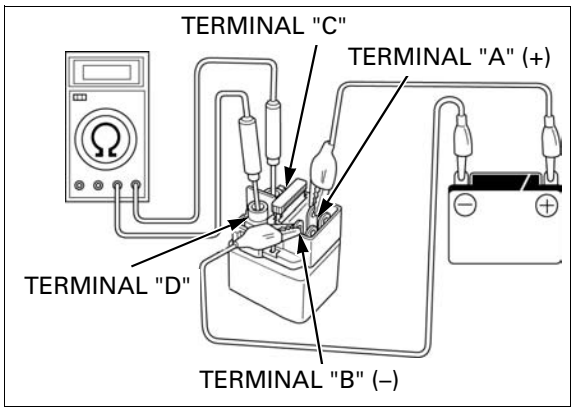

MEMO

22. LIGHTS/METERS/SWITCHES

SYSTEM LOCATION 22-2

SERVICE INFORMATION 22-3

HEADLIGHT 22-4

FRONT TURN SIGNAL/
POSITION LIGHT 22-5

REAR TURN SIGNAL/BRAKE/
TAILLIGHT 22-6

LICENSE LIGHT 22-7

COMBINATION METER 22-8

SPEEDOMETER/VS SENSOR 22-11

FUEL GAUGE/FUEL LEVEL SENSOR ... 22-13

COOLANT TEMPERATURE GAUGE/
ECT SENSOR 22-14

OIL PRESSURE INDICATOR 22-15

IGNITION SWITCH 22-16

HANDLEBAR SWITCH 22-18

INHIBITOR SWITCH 22-19

BRAKE LIGHT SWITCH 22-20

SIDESTAND SWITCH 22-20

FAN MOTOR RELAY 22-22

MAIN RELAY 22-24

TURN SIGNAL RELAY 22-26

HORN 22-27

ACCESSORY SOCKET 22-27

SYSTEM LOCATION

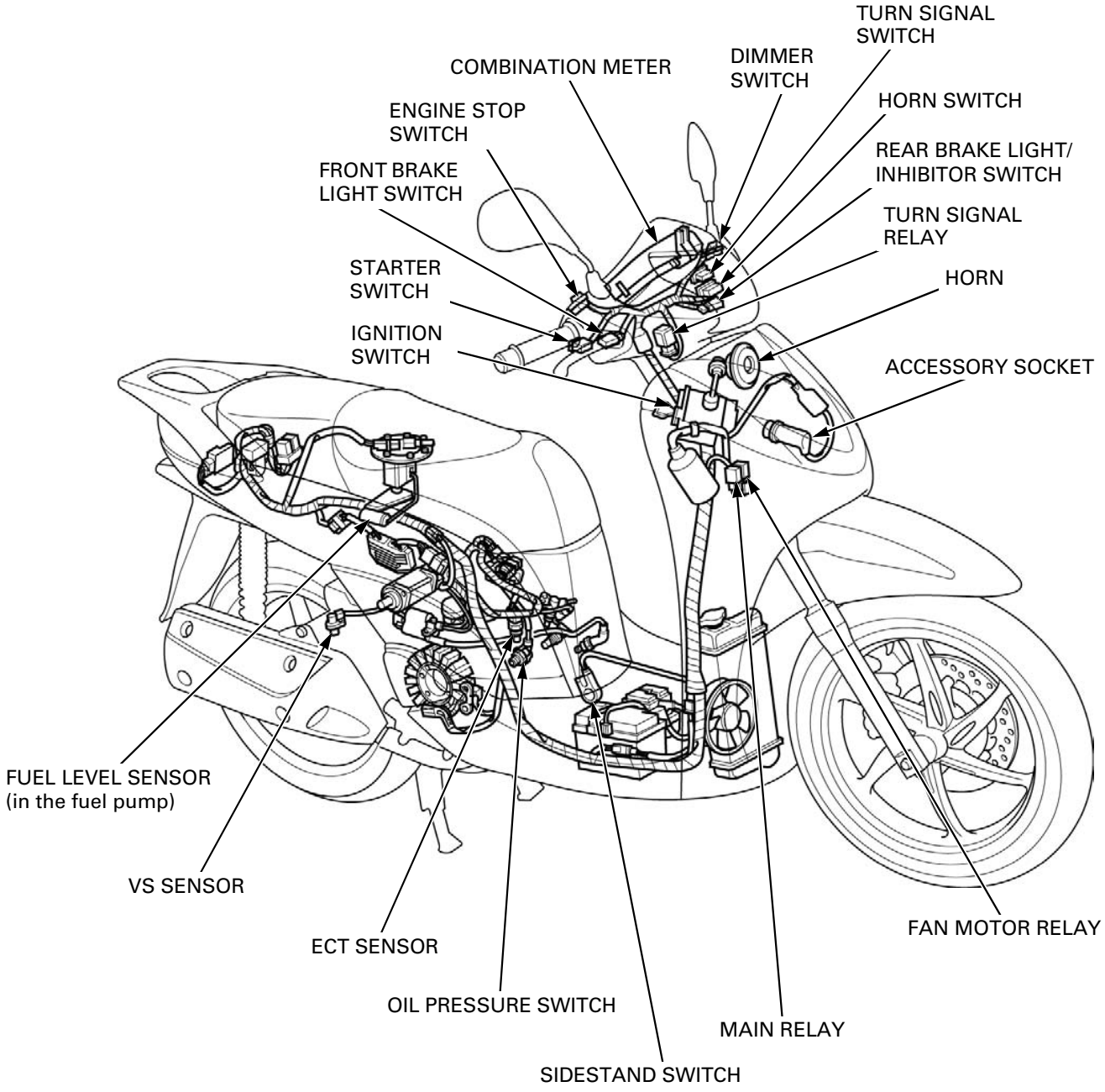

SERVICE INFORMATION

GENERAL

NOTICE

Note the following when replacing the halogen headlight bulb.
- *Wear clean gloves while replacing the headlight bulb. Do not put fingerprints on the headlight bulb, as they may create hot spots on the bulb and cause it to fail.*
- *If you touch the bulb with your bare hands, clean it with a cloth moistened with alcohol to prevent its early failure.*

- A halogen headlight bulb becomes very hot while the headlight is on, and remains hot for a while after it is turned off. Be sure to let it cool down before servicing.
- Be sure to install the dust cover after replacing the bulb.
- Use an electric heating element to heat the water/coolant mixture for the ECT sensor inspection. Keep all flammable materials away from the electric heating element. Wear protective clothing, insulated gloves and eye protection.
- Check the battery condition before performing any inspection that requires proper battery voltage.
- A continuity test can be made with the switches installed on the scooter.
- The following color codes used are indicated through out this section.

Bu: Blue	G: Green	Lg: Light Green	W: White
Bl: Black	Gr: Gray	O: Orange	Y: Yellow
Br: Brown	Lb: Light Blue	R: Red	

SPECIFICATIONS

ITEM			SPECIFICATIONS
Bulb	Headlight (high/low beam)		12 V - 60/55 W
	Brake/taillight		12 V - 21/5 W
	License light		12 V - 5 W
	Turn signal light		12 V - 21 W x 4
	Position light		12 V - 5 W x 2
	Instrument light		LED
	High beam indicator		12 V - 1.12 W
	Turn signal indicator		12 V - 1.4 W x 2
	PGM-FI malfunction indicator		LED
	Engine oil pressure indicator		12 V - 1.4 W
	Engine oil change indicator		LED
Fuse	Main fuse		30 A
	Sub-fuse	STD type	15 A x 1, 10 A x 5
		ABS type	30 A x 2, 15 A x 1, 10 A x 6

TORQUE VALUES

License light unit screw	1.5 N·m (0.2 kgf·m, 1.1 lbf·ft)
Sidestand switch bolt	10 N·m (1.0 kgf·m, 7 lbf·ft)

HEADLIGHT

BULB REPLACEMENT

Remove the front handlebar cover (page 3-14).

Be careful not to scratch the headlight lens during servicing.

Release the dust cover and disconnect the bulb connector.

NOTICE

Avoid touching a new halogen bulb. Finger prints can create hot spots that cause a bulb to break.

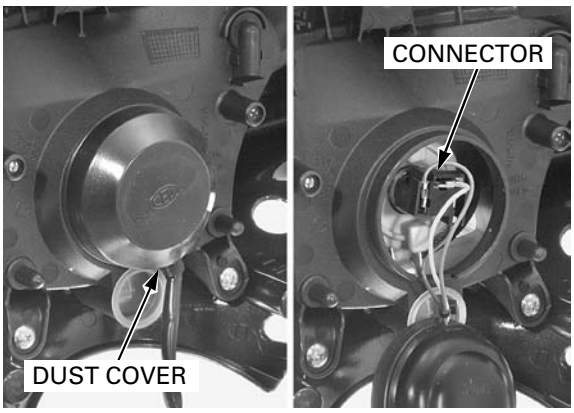

Remove the bulb retainer by turning it counterclockwise.

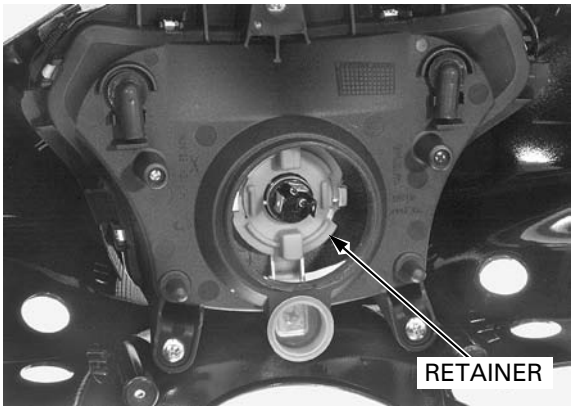

Remove the headlight bulb and replace it with a new one.

Installation is in the reverse order of removal.

- Align the bulb tab with the grooves properly.
- When installing the dust cover, align the wires with the cutout in the headlight housing and set the dust cover tightly against the housing.

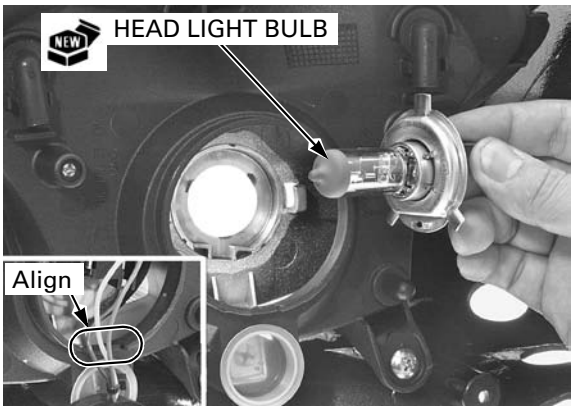

REMOVAL/INSTALLATION

Remove the front handlebar cover (page 3-14).

Remove the three screws and the headlight assembly while spreading the handlebar cover upward.

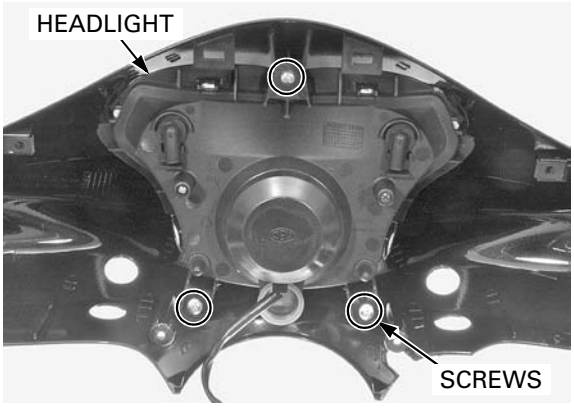

FRONT TURN SIGNAL/POSITION LIGHT

BULB REPLACEMENT

TURN SIGNAL LIGHT BULB

Remove the front upper cover (page 3-9).

Remove the bulb socket by turning it counterclockwise.

While pushing the bulb in, turn it counterclockwise to remove it, and replace it with a new one.

Check the rubber seal is in good condition and replace it with a new one if necessary.

Installation is in the reverse order of removal.

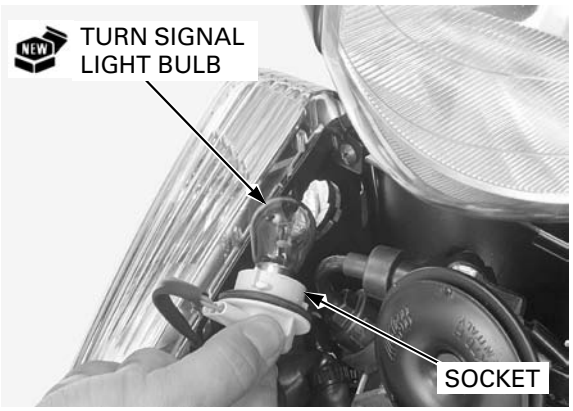

POSITION LIGHT BULB

Remove the front upper cover (page 3-9).

Pull the bulb socket out of the turn signal/position light unit.

Pull the bulb out of the socket and replace it with a new one.

Installation is in the reverse order of removal.

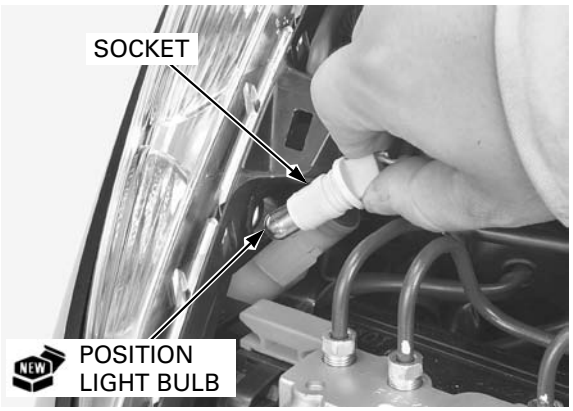

REMOVAL/INSTALLATION

Remove the front inner cover (page 3-10).

Disconnect the front turn signal/position light 3P connector.

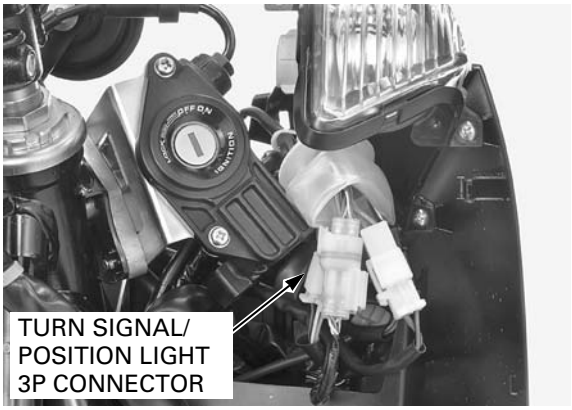

Release the wire band boss from the wire guide. Remove the three screws and turn signal/position light unit.

Route the wires properly (page 1-19).

Installation is in the reverse order of removal.

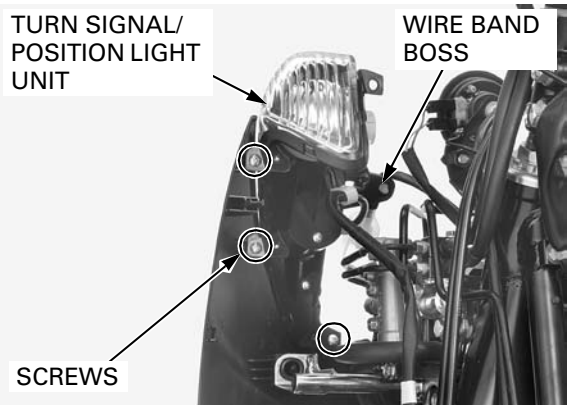

REAR TURN SIGNAL/BRAKE/ TAILLIGHT

BULB REPLACEMENT

REAR BRAKE/TAILLIGHT BULB

Remove the following:

- two screws
- brake/taillight lens

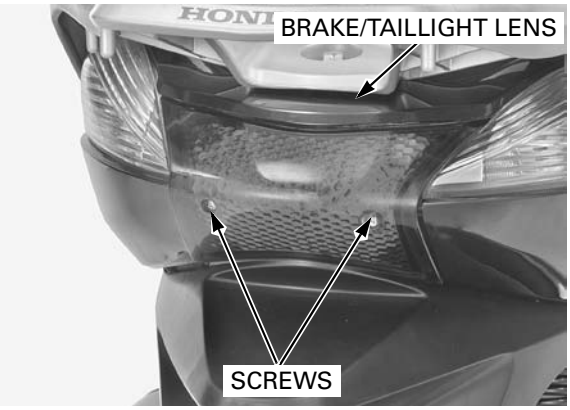

While pushing the brake/taillight bulb in, turn it counterclockwise to remove it, and replace it with a new one.

Make sure the lens gasket is installed in position and is in good condition and replace it if necessary.

Installation is in the reverse order of removal.

REAR TURN SIGNAL LIGHT BULB

Remove the following:

- brake/taillight lens (page 22-6)
- screw(s)
- turn signal light lens(es)

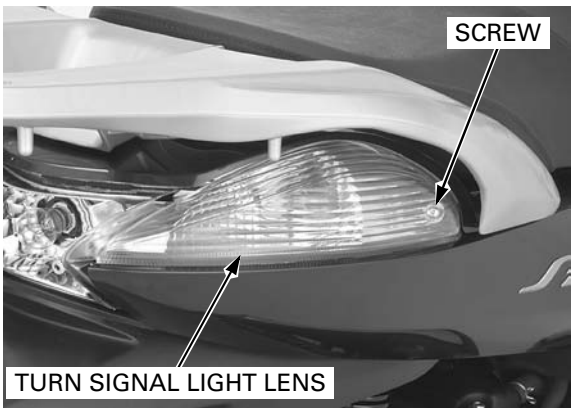

While pushing the turn signal light bulb in, turn it counterclockwise to remove it, and replace it with a new one.

Make sure the lens gasket is installed in position and is in good condition, and replace it with a new one if necessary.

Installation is in the reverse order of removal.

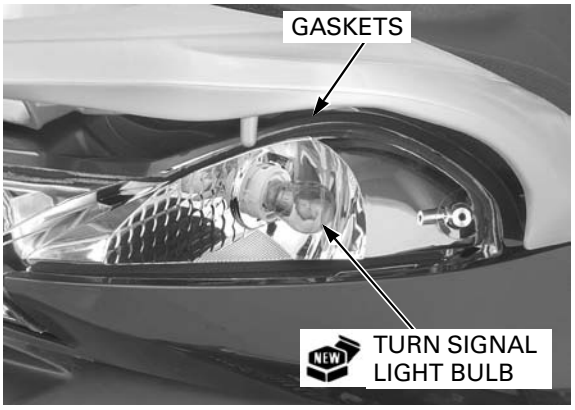

REMOVAL/INSTALLATION

Remove the body cover (page 3-6).

Remove the six screws and rear turn signal/brake/taillight unit.

Installation is in the reverse order of removal.

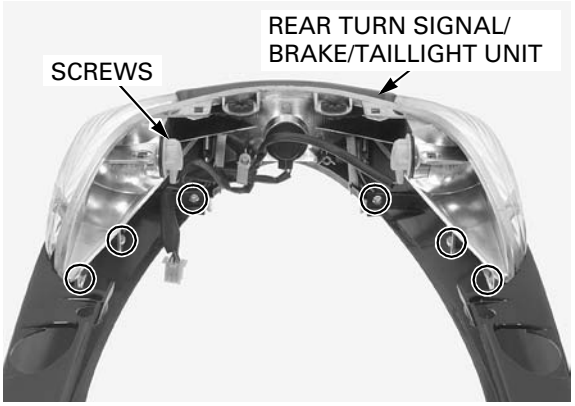

LICENSE LIGHT

BULB REPLACEMENT

Remove the screw and washer, and license light unit from the rear fender.

Pull the bulb socket out of the light housing.
Pull the bulb out of the socket and replace it with a new one.

Installation is in the reverse order of removal.

TORQUE: License light unit screw
1.5 N·m (0.2 kgf·m, 1.1 lbf·ft)

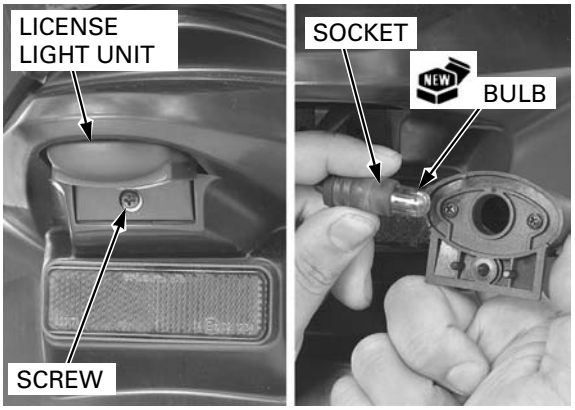

COMBINATION METER

BULB REPLACEMENT

Remove the front handlebar cover (page 3-14).

Remove the rubber cap.
Remove the bulb by turning it counterclockwise and replace it with a new one.

Installation is in the reverse order of removal.

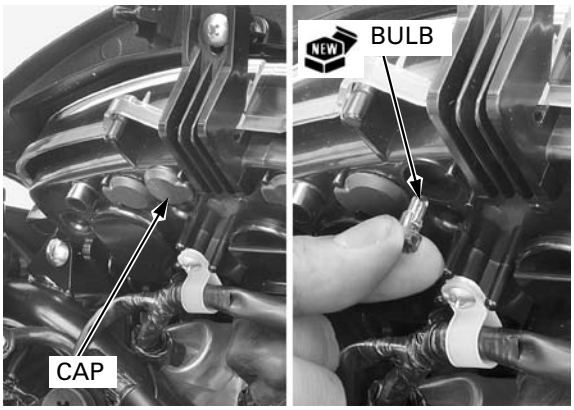

METER INSPECTION

INITIAL FUNCTION

When the ignition switch turns ON, check that the speedometer, fuel gauge and coolant temperature gauge needles move to full scale and then return to zero.

If the all needles does not move, perform the power and ground line inspection of the combination meter (page 22-8).

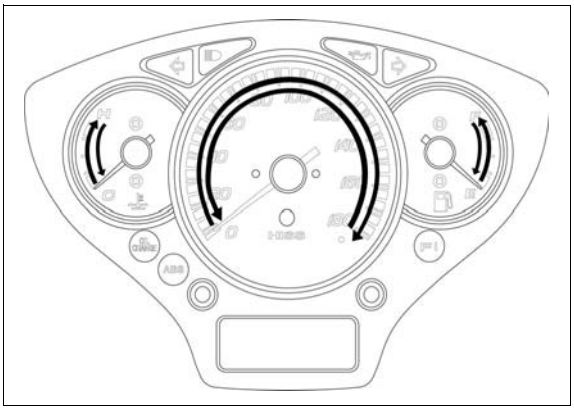

POWER/GROUND LINE INSPECTION

POWER INPUT LINE

Remove the front handlebar cover (page 3-14).

Disconnect the combination meter 16P connector.

Measure the voltage between the Black/Brown wire terminal (+) of the 16P connector of the wire harness side and ground (–).
There should be battery voltage with the ignition switch turned "ON".

If there is no voltage, check for open circuit in Black/Brown wire.

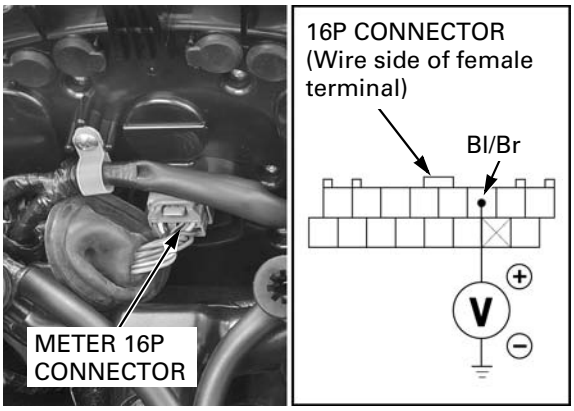

GROUND LINE

Remove the front handlebar cover (page 3-14).

Disconnect the combination meter 16P connector.

Check for continuity between the Green wire terminal of the 16P connector of the wire harness side and ground.
There should be continuity at all times.
If there is no continuity, check for an open circuit in the Green wire.

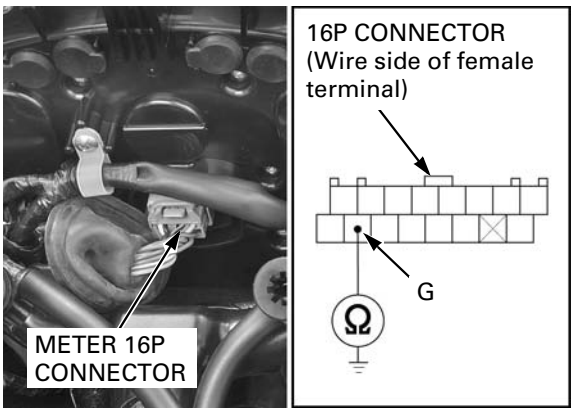

BACK-UP VOLTAGE LINE

Measure the voltage between the Light green/Black wire terminal (+) of the 16P connector of the wire harness side and ground (–).
There should be battery voltage at all times.

If there is no voltage, check the following:

- Open circuit in the Light green/Black wire
- Blown "CLOCK" fuse (10 A)
- Open circuit between the Red wire between the fuse box and battery

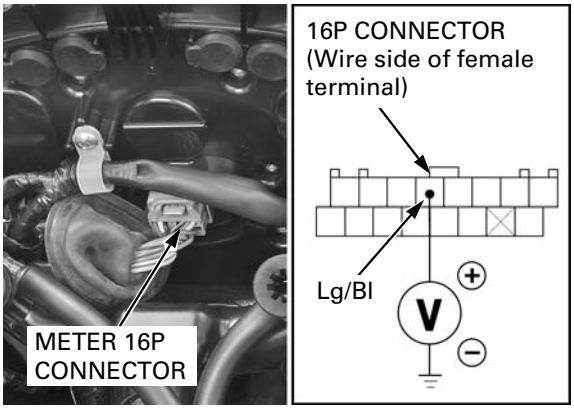

REMOVAL/INSTALLATION

Remove the rear handlebar cover (page 3-14).

Disconnect the following:

- Engine stop switch 4P connector
- Starter switch 4P connector
- Dimmer switch 4P connector
- Turn signal switch 3P connector
- Horn switch 2P connector

Remove the three screws and combination meter.

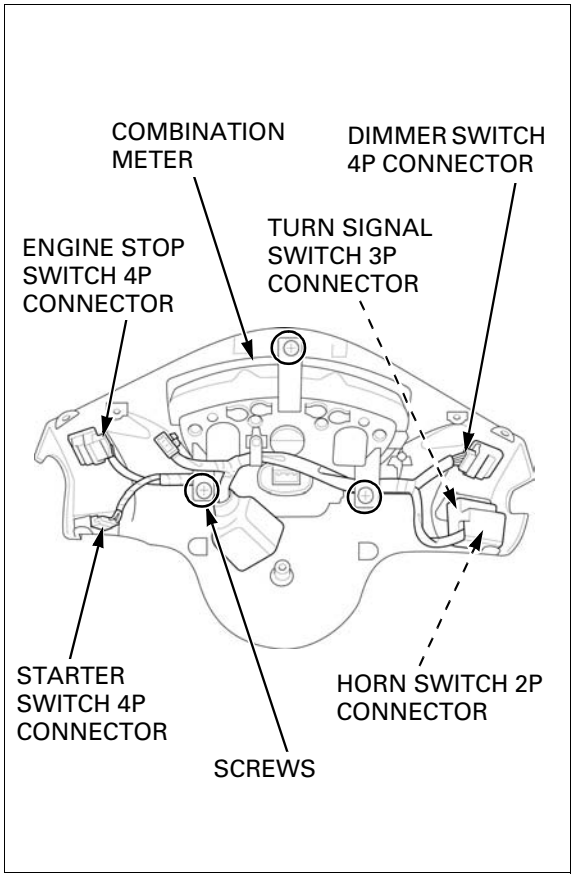

DISASSEMBLY/ASSEMBLY

Remove the combination meter (page 22-9).

Remove the following:
- harness clamp screw and meter harness
- four screws and meter lens
- eight screws and under case
- reflecting plate
- meter assembly

Assembly is in the reverse order of disassembly.

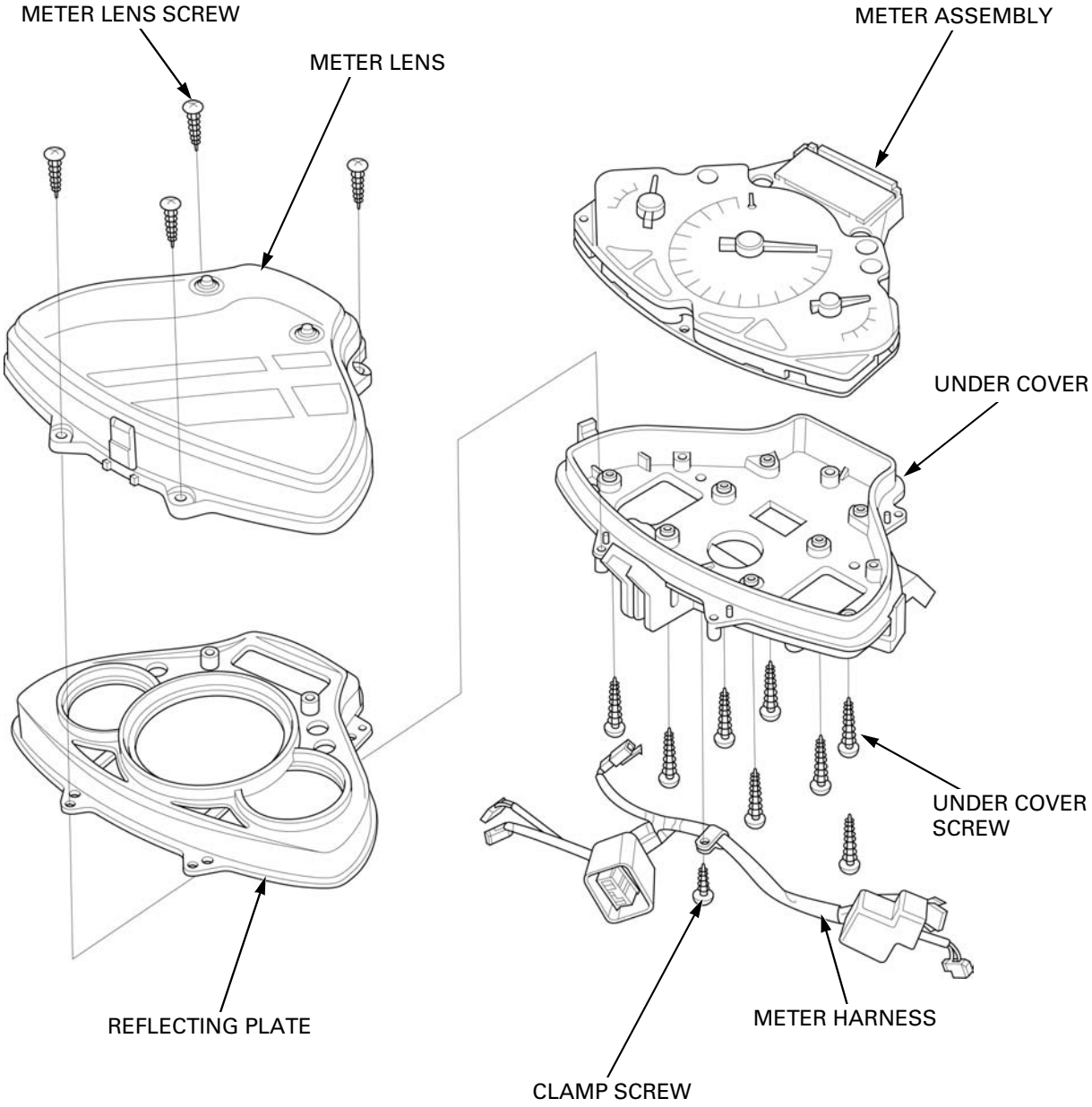

SPEEDOMETER/VS SENSOR

SYSTEM INSPECTION

Speedometer gauge does not move

Check the combination meter initial function (page 22-8).

If the speedometer needle shows initial function but speedometer does not move at running, check the following:

Support the scooter its centerstand and rise the rear wheel off the ground.

Turn the ignition switch "ON" then measure the output voltage (sensor signal) between the combination meter 16P connector terminal with the connector connected and ground then while slowly turning the rear wheel by your hand.

CONNECTION: Pink/Green (+) – Ground (–)
STANDARD: Repeat 0 to 5 V

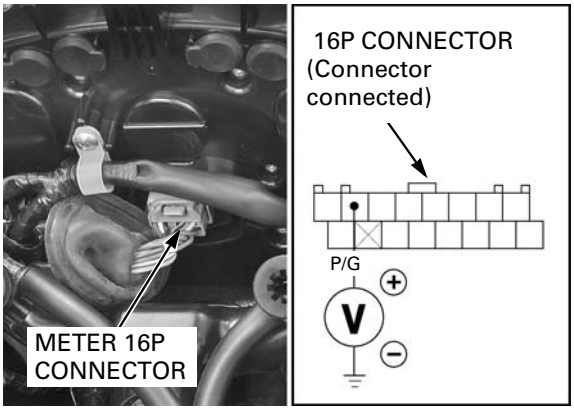

If the pulse voltage appears, but the speedometer operate abnormally, replace the meter assembly of the combination meter.

If the pulse voltage does not appear, check the following:

Disconnect the VS sensor 3P connector (page 22-12).

Check for loose or poor contact of the VS sensor 3P connector.

Turn the ignition switch "ON" then measure the voltage at the VS sensor connector of the wire harness side.

CONNECTION: Yellow/Red (+) – Green/Black (–)
STANDARD: About 5 V

If there is no voltage, open or short circuit in Yellow/Red or open circuit in Green/Black wire.

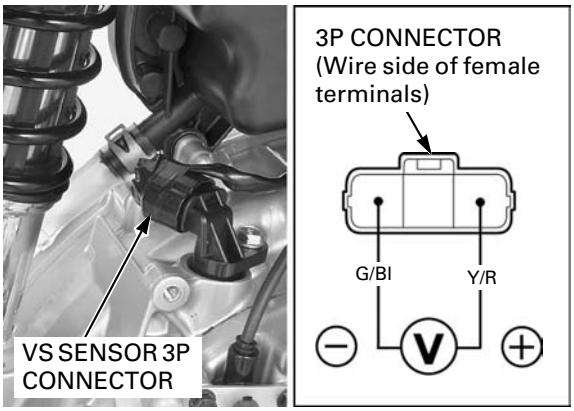

Turn the ignition switch "OFF" then disconnect the combination meter 16P connector.

Check for continuity between the VS sensor connector and combination meter connector of the wire harness side.

CONNECTION: Pink/Green – Pink/Green

There should be continuity.

If there is no continuity, check for open circuit in Pink/Green wire.

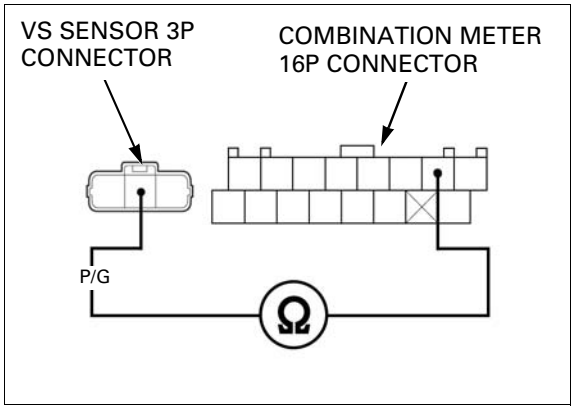

Check for continuity between the combination meter connector of the wire harness side and ground.

CONNECTION: Pink/Green (+) – Ground (–)

There should be no continuity.

If there is continuity, check for short circuit in Pink/Green wire.

- If the above inspection are normal, replace the VS sensor with a new one, and recheck.

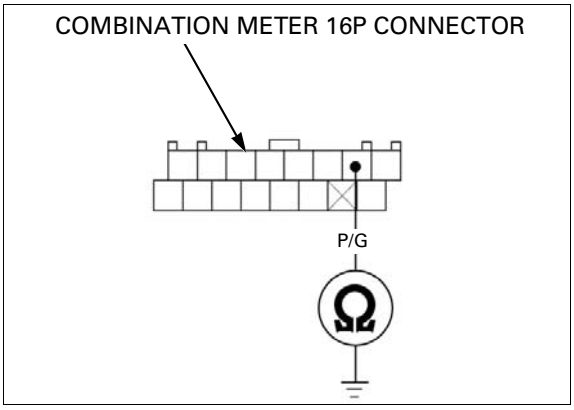

REMOVAL/INSTALLATION

Remove the sensor protector (page 18-25).

Disconnect the VS sensor 3P connector.

Remove the bolt and VS sensor.

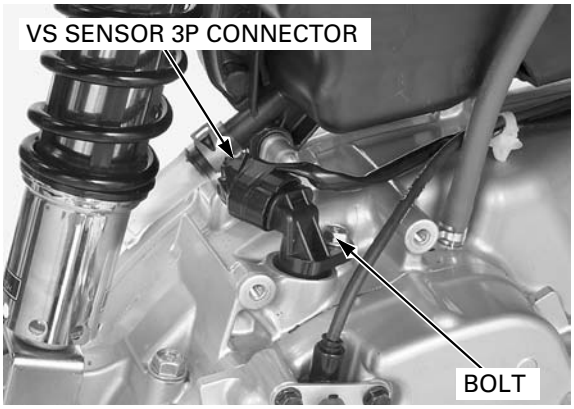

Remove the O-ring and replace it with a new one.

Installation is in the reverse order of removal.

- Coat a new O-ring with engine oil.
- Route the wire harness properly (page 1-19).

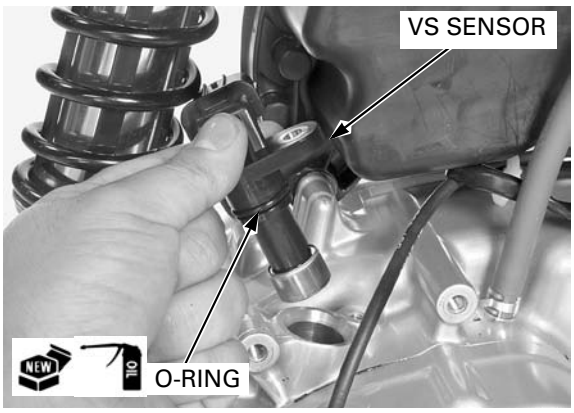

FUEL GAUGE/FUEL LEVEL SENSOR

- The fuel level sensor is mounted on the fuel pump (the fuel pump with the built-in level sensor). Do not disassemble the fuel pump. Replace the fuel pump as an assembly when the it is faulty.

CIRCUIT INSPECTION

When fuel is about full but fuel gauge does not move

Check the combination meter initial function (page 22-8).

If the fuel gauge needle shows initial function but fuel gauge does not move at fuel about full, check the following:

Remove the luggage box (page 3-5).

Disconnect the fuel pump/fuel level sensor 5P connector.

Short the connector terminals of the wire harness side with the jumper wire.

CONNECTION: Gray/Black – Green/Black

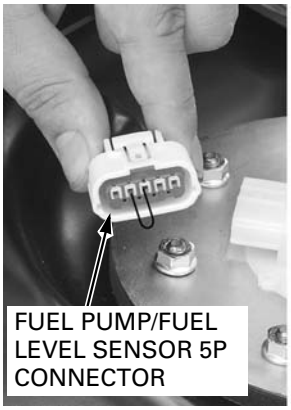

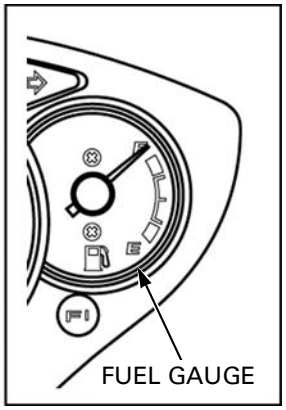

Do not leave the terminals connected with jumper wire for a long time, as if causes damage to the fuel gauge.

Turn the ignition switch "ON", check if the fuel gauge needle moves to "F".
The needle moves if the system circuit is normal.
In that case, check the fuel level sensor (page 22-13).

- If the needle does not move, check the following:
  - Gray/Black wire between the fuel pump/fuel level sensor and combination meter for open or short circuit
  - Green/Black wire between the fuel pump/fuel level sensor and ground for open circuit
- If the wires are normal, replace the meter assembly with a new one, and recheck.

FUEL LEVEL SENSOR INSPECTION

Remove the fuel pump/fuel level sensor (page 6-48).

Measure the resistance between the connector terminals at the float upper (full) and lower (empty) positions.

CONNECTION: A – B

(20°C/68°F)

FLOAT POSITION	FULL	EMPTY
	8 – 11 Ω	243 – 297 Ω

Replace the fuel level sensor if it is out of specification.

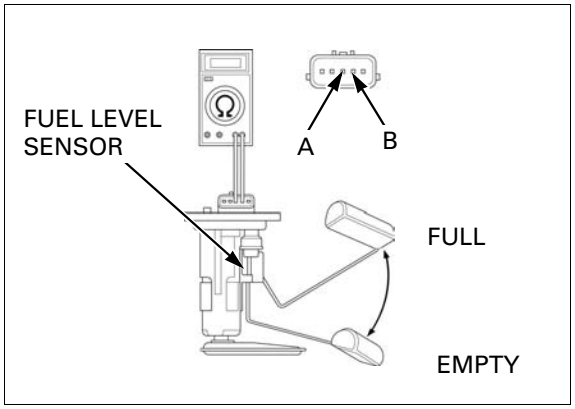

COOLANT TEMPERATURE GAUGE/ ECT SENSOR

CIRCUIT INSPECTION

When engine is hot but gauge needle does not move

Check the combination meter initial function (page 22-8).

If the coolant temperature gauge needle shows initial function but coolant temperature gauge does not move at engine is hot, check the following:

Remove the luggage box (page 3-5).

Disconnect the ECM connector or failure code will be stored in ECM.

Disconnect the ECM 33P connector.
Disconnect the ECT sensor 3P (Gray) connector.

Short the connector terminal of the wire harness side and ground with the jumper wire.

CONNECTION: Green/Blue – Ground

Do not leave the terminal connected with jumper wire for a long time, as it causes damage to the coolant temperature gauge.

Turn the ignition switch "ON", check the coolant temperature gauge needle move to "H".
The needle moves if the system circuit is normal.
In that case, check the ECT sensor (page 22-14).

- If the needle does not move, check the Green/Blue wire between the ECT sensor and combination meter for open or short circuit.
- If the wire is normal, replace the meter assembly with a new one, and recheck.

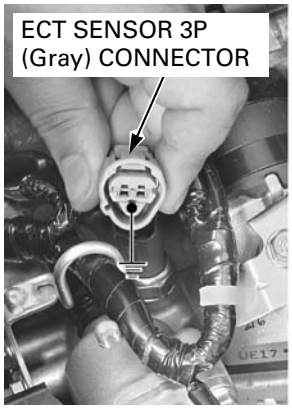

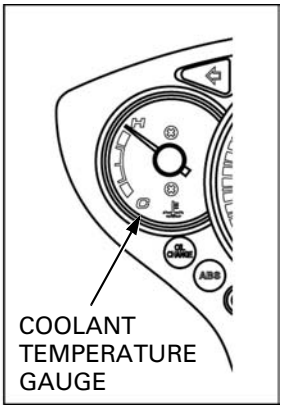

ECT SENSOR INSPECTION

Remove the ECT sensor (page 6-74).

Suspend the ECT sensor in a pan of coolant (1:1 mixture) on an electric heating element and measure the resistance between the ECT sensor terminal and body as the coolant heats up.

- Dip the ECT sensor in coolant up to its threads while keeping the distance at least 40 mm (1.57 in) from the bottom of the pan to the bottom of the sensor.
- Keep the temperature constant for 3 minutes before testing. A sudden change of temperature will result in incorrect reading. Do not let the thermometer or ECT sensor touch the pan.

Measure the resistance between the ECT sensor terminal and thread.

CONNECTION: A – Ground

Temperature °C (°F)	50	80	100
Resistance (kΩ)	6.8 – 7.4	2.1 – 2.7	0.6 – 0.7

- If the resistance is out of above range by 10% at any temperature listed, replace the ECT sensor.

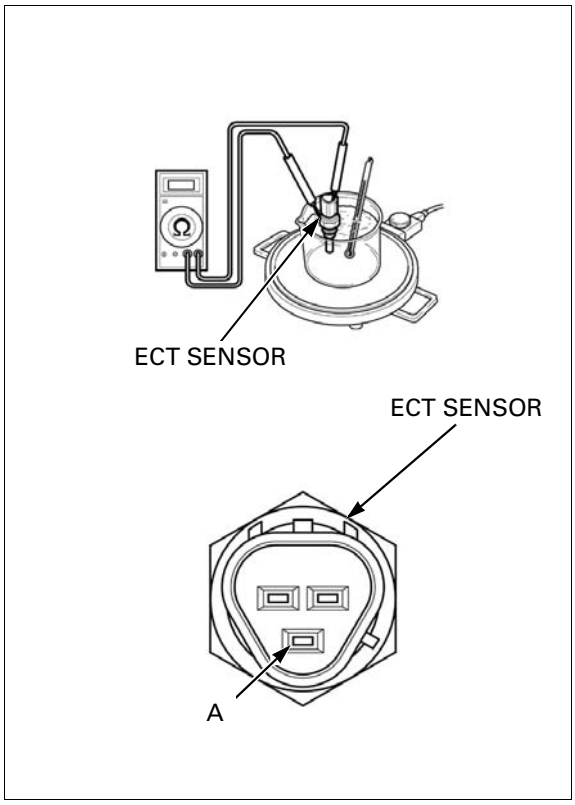

OIL PRESSURE INDICATOR

INSPECTION

Indicator does not come on with the ignition switch turned to "ON"

Check the combination meter initial function (page 22-8).

If the all needles show initial functions but oil pressure indicator does not came on, check the following:

Slide the rubber cap, and disconnect the oil pressure switch wire by removing the terminal screw.

Ground the wire terminal.
Turn the ignition switch to "ON" and check the oil pressure indicator.

- If the indicator comes on, replace the oil pressure switch.
- If the indicator does not come on, check for loose an open circuit in the Blue/Red wire. If the wire is OK, replace the combination meter (page 22-9).

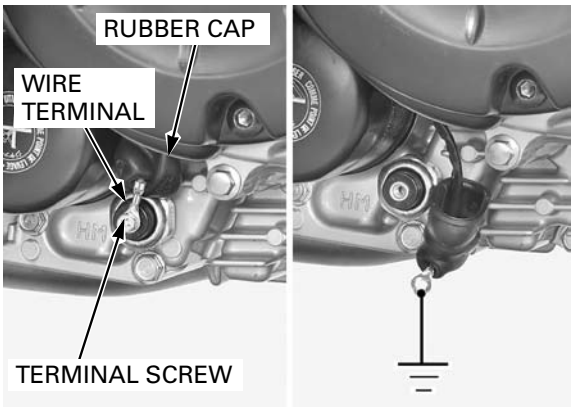

Indicator stays on while the engine is running

Slide the rubber cap, and disconnect the oil pressure switch wire by removing the terminal screw.

Check for continuity between the wire terminal and ground.

- If there is continuity, check for a short circuit in the Blue/Red wire.
- If there is no continuity, check the oil pressure (page 5-5).
  If the oil pressure is normal, replace the oil pressure switch.

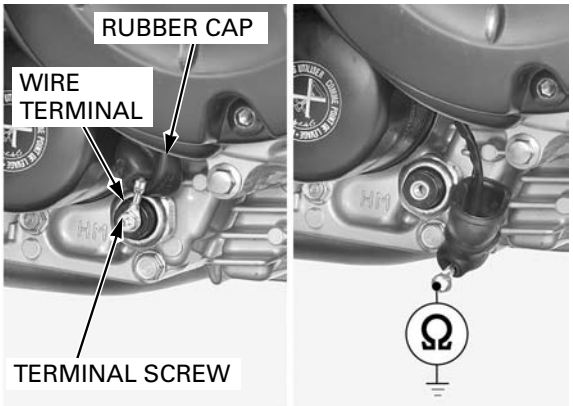

IGNITION SWITCH

INSPECTION

STD type: Remove the front upper cover (page 3-9).

ABS type: Remove the front inner cover (page 3-10).

Disconnect the ignition switch 2P connector.

Check for continuity between the switch side connector terminals in each switch position.
Continuity should exist between the color coded wire terminals as follows:

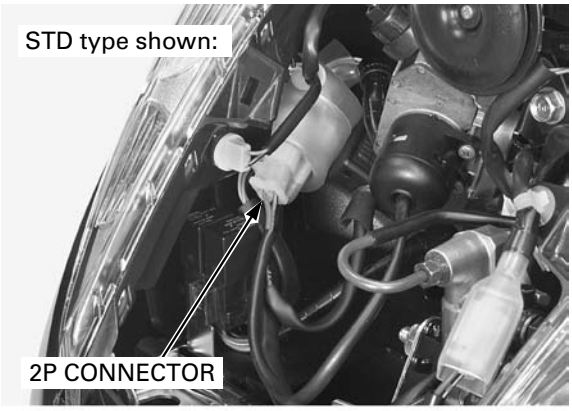

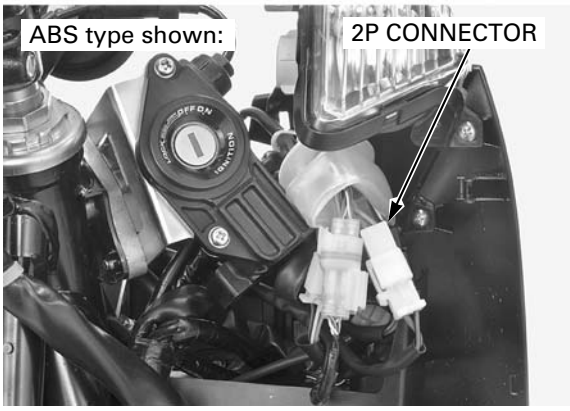

IGNITION SWITCH		
	BAT1	BAT2
LOCK		
OFF		
ON	○	○
COLOR	R	R/Bl

REMOVAL/INSTALLATION

Remove the following:

- Front inner cover (page 3-10)
- Immobilizer (page 23-14)

Disconnect the ignition switch 2P connector.

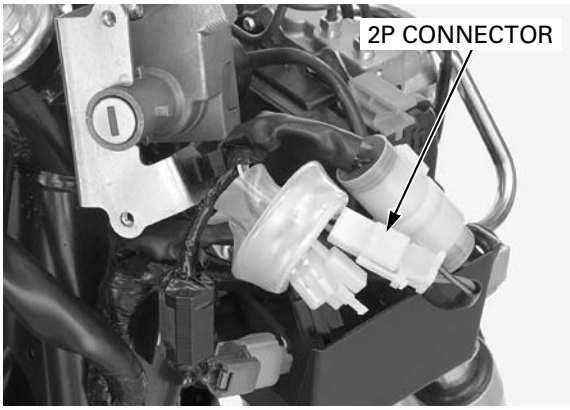

Loosen the seat lock cable joint nut and disconnect the seat lock cable from the ignition switch.

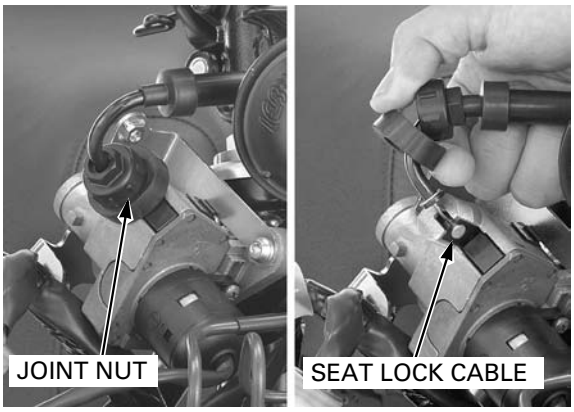

Remove the ignition switch mounting bolts and ignition switch.

Install the ignition switch with new one-way bolts. Tighten the ignition switch one-way bolts.

Route the wires and cable properly (page 1-19).

Install the removed parts in the reverse order of removal.

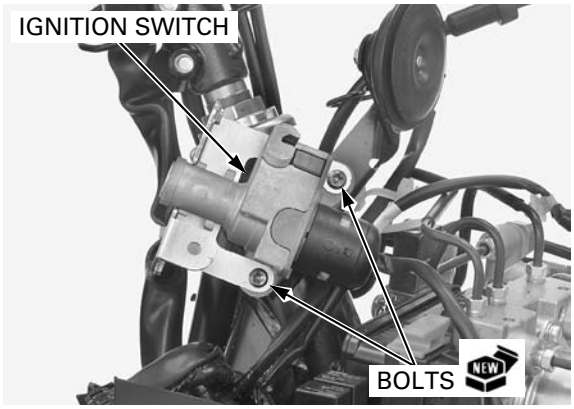

HANDLEBAR SWITCH

INSPECTION

RIGHT HANDLEBAR

Remove the rear handlebar cover (page 3-14).

Check for continuity between the switch terminals in each switch position.
Continuity should exist between the terminals of the corresponding color coded wire as follows:

STARTER SWITCH		
	ST1	ST2
FREE		
PUSH	○	○
COLOR	G/Y	Y/G

ENGINE STOP SWITCH		
	BAT	IGN
	○	○
COLOR	Bl	R/G

LEFT HANDLEBAR

Remove the rear handlebar cover (page 3-14).

Check for continuity between the switch terminals in each switch position.
Continuity should exist between the terminals of the corresponding color coded wire as follows:

DIMMER SWITCH			
	HI	LO	HL
LO		○	○
N	○	○	○
HI	○		○
COLOR	Bu	W	Bl/R

PASSING SWITCH		
	HI	BAT
FREE		
PUSH	○	○
COLOR	Bu	Bl/R

TURN SIGNAL SWITCH			
	W	WL	WR
R	○		○
N			
L	○	○	
COLOR	Gr	O	Lb

HORN SWITCH		
	HO	BAT
FREE		
PUSH	○	○
COLOR	Lg	Bl/Br

INHIBITOR SWITCH

INSPECTION

Remove the front handlebar cover (page 3-14).

Disconnect the inhibitor switch connectors.

Check for continuity between the switch terminals. There should be continuity with the brake lever squeezed, and there should be no continuity when the brake lever is released.

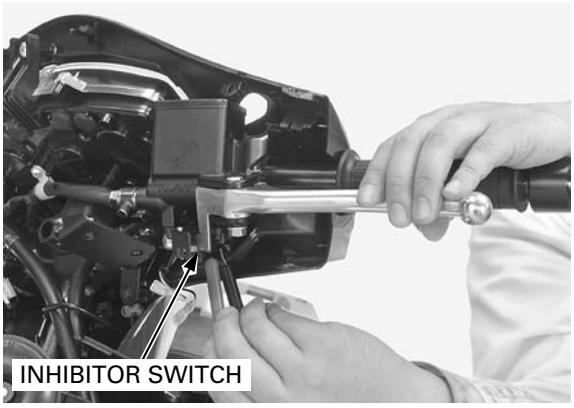

BRAKE LIGHT SWITCH

INSPECTION

Remove the front handlebar cover (page 3-14).

Disconnect the brake light switch connectors.

Check for continuity between the switch terminals.
There should be continuity with the brake lever squeezed, and there should be no continuity when the brake lever is released.

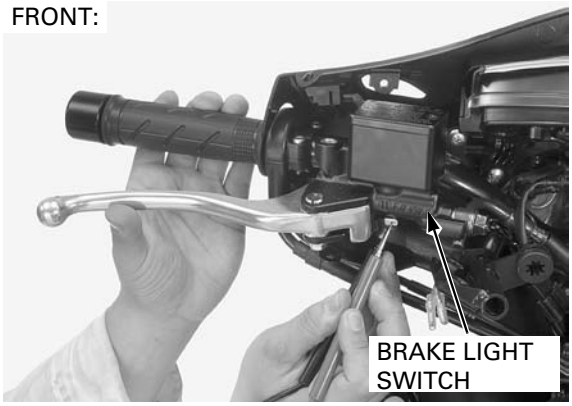

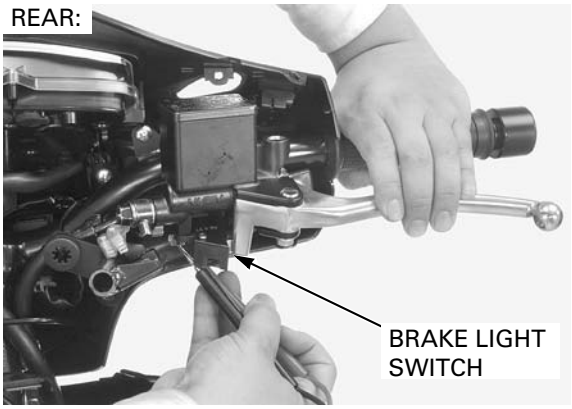

SIDESTAND SWITCH

INSPECTION

Remove the right floor side cover (page 3-8).

Disconnect the sidestand switch 2P (Black) connector.
Check for continuity between the switch side connector terminals.
There should be continuity with the sidestand retracted and no continuity with the sidestand lowered.

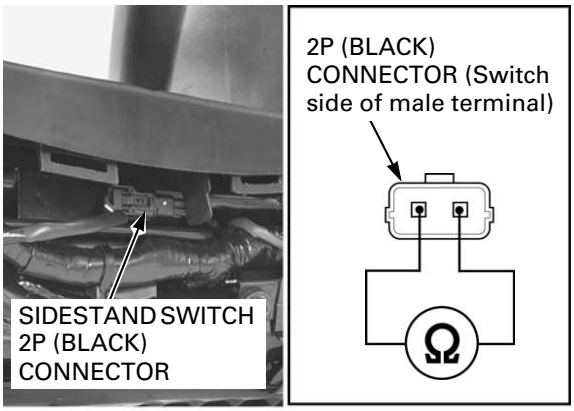

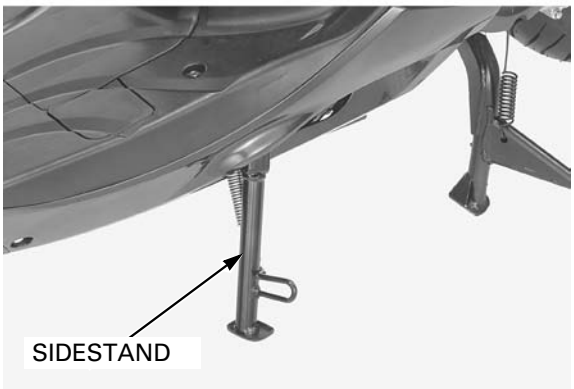

REMOVAL/INSTALLATION

Remove the following:

- Floor side cover (page 3-8)
- Floor panel (page 3-13)

Support the scooter securely using the centerstand.

Disconnect the sidestand switch 2P (Black) connector.

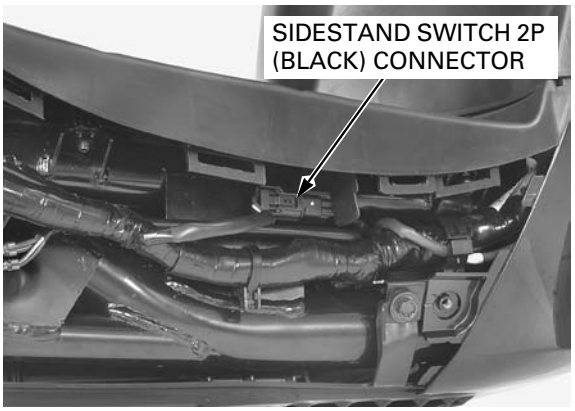

Release the sidestand switch wire from the wire bands.

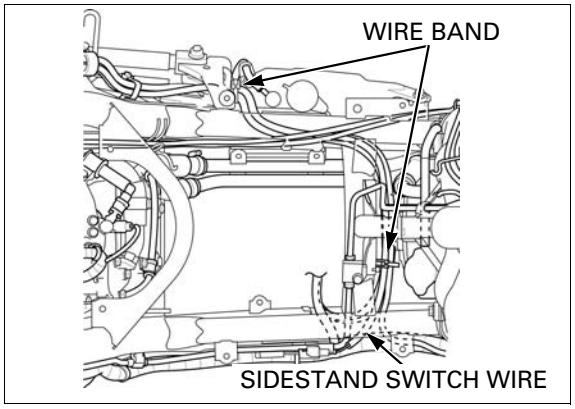

Remove the bolt and sidestand switch.

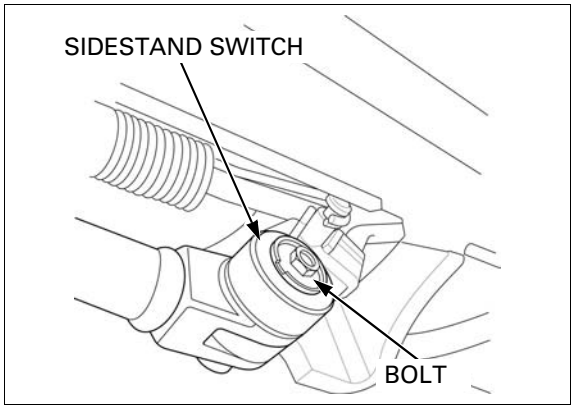

Install the sidestand switch by aligning its pin with the sidestand hole and switch groove with the bracket pin.
Install and tighten the bolt to the specified torque.

TORQUE: 10 N·m (1.0 kgf·m, 7 lbf·ft)

Route the sidestand switch wire properly (page 1-19).

Install the removed parts in the reverse order of removal.

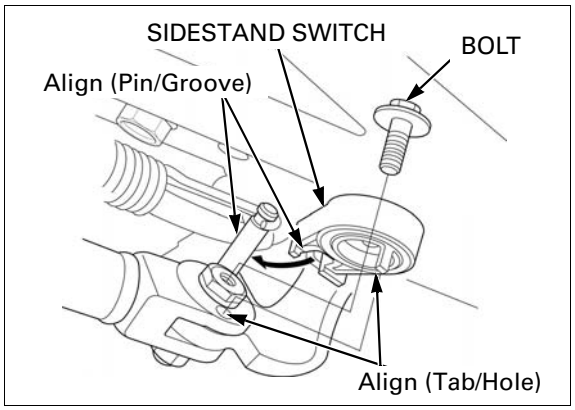

FAN MOTOR RELAY

INSPECTION

Fan motor does not stop

Remove the rear fender A (page 3-7).

Disconnect the ECM 33P connector.

Turn the ignition switch "ON" and check the fan motor does stop.

- If the fan motor does not stop, check the following:
  - short circuit in the Black/Blue wire between the the fan motor relay and ECM.
  - Inspect the fan motor relay (page 22-23)
- If the fan motor stops, replace the ECM with a new one, and recheck.

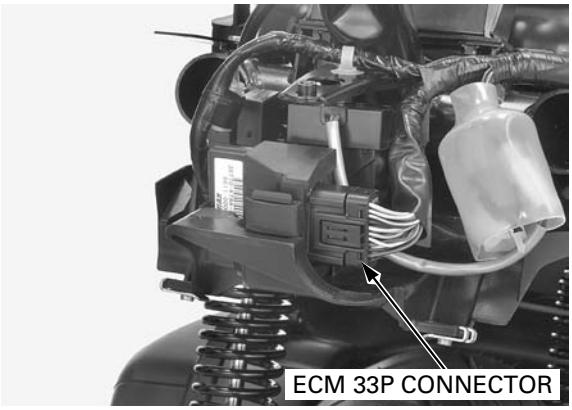

Fan motor does not start

Turn the ignition switch OFF.

Remove the fan motor relay (page 22-24).

Short the relay connector terminals of the wire harness side with a jumper wire.

Connection: Black/White – Black/Blue

Remove the rear fender A (page 3-7).

Disconnect the ECM 33P connector.

Turn the ignition switch "ON".

Measure the voltage between the ECM connector of the wire harness side and ground.

Connection: Black/Blue (+) – Ground (–)

If the battery voltage does not appear, inspect the following:

- Open circuit in Black/White wire between the engine stop relay and fan motor relay coil line side
- Open circuit in Black/Blue wire between the fan motor relay and ECM

If the battery voltage appears, the fan motor relay coil line is normal.
Remove the jumper wire from the relay connector then inspect the following:

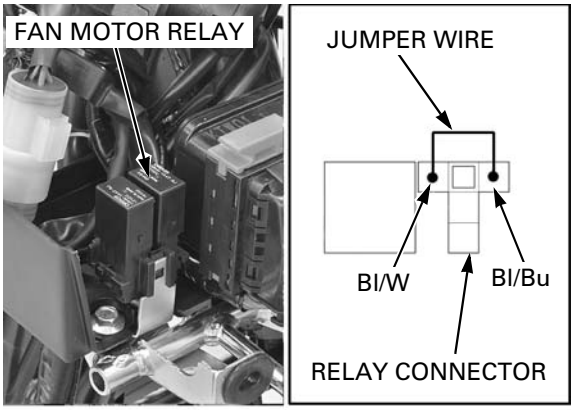

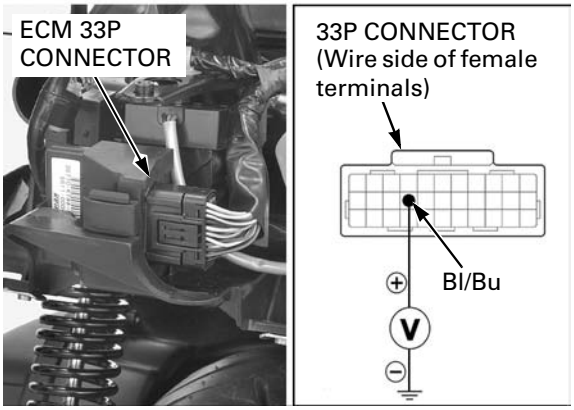

Turn the ignition switch OFF.

Short the relay connector terminals of the wire harness side with a jumper wire.

Connection: Black – Blue

Remove the front inner cover (page 3-10).

Disconnect the fan motor 2P (Black) connector.

Turn the ignition switch "ON".

Measure the voltage between the fan motor 2P (Black) connector of the wire harness side and ground.

Connection: Black (+) – Ground (–)

If the battery voltage appears, the fan motor relay switch line is normal.
Inspect the fan motor relay function test (page 22-23).

If the battery voltage does not appear, inspect the following:

– Open circuit in Blue wire between the fuse box and fan motor relay switch line side
– Open circuit in Black wire between the fan motor relay and fan motor

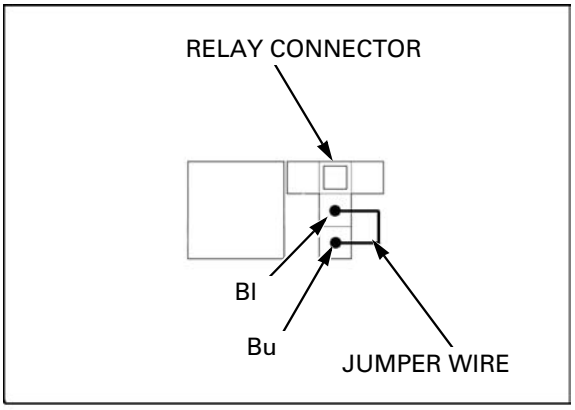

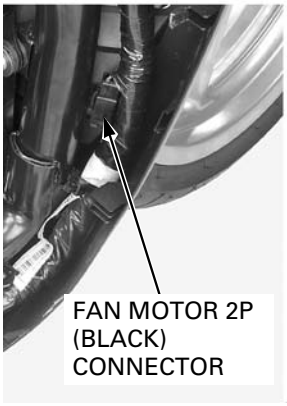

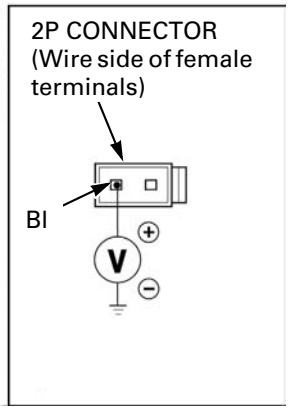

FUNCTION TEST

Remove the fan motor relay (page 22-24).

Connect an ohmmeter to the switching side relay terminals.

CONNECTION: A – B

Connect a 12 V battery to the coil side relay terminals.

CONNECTION: C (+) – D (–)

There should be continuity while the battery is connected to the relay terminals and there should be no continuity when the battery is disconnected.

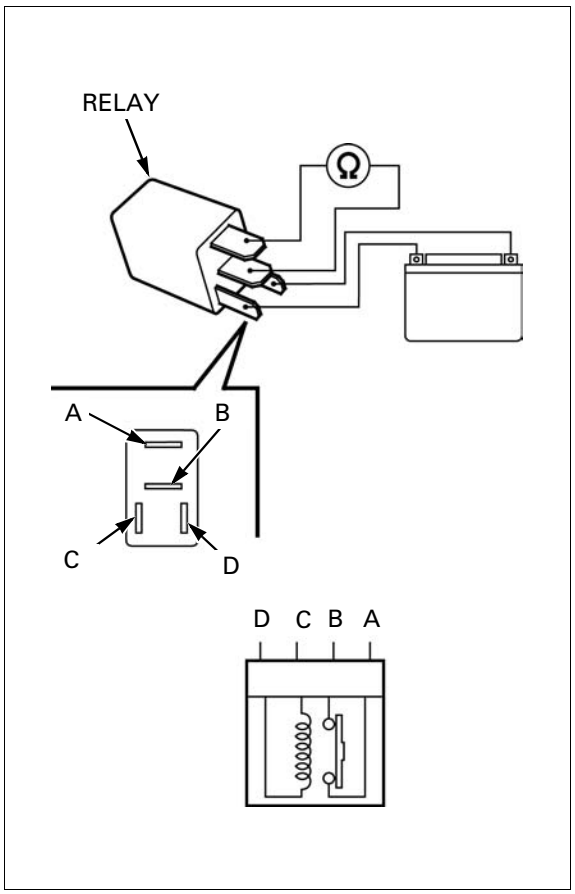

REMOVAL/INSTALLATION

STD type: Remove the front upper cover (page 3-9).

ABS type: Remove the front Lower cover (page 3-12).

Remove the fan motor relay from the relay connector.

Installation is in the reverse order of removal.

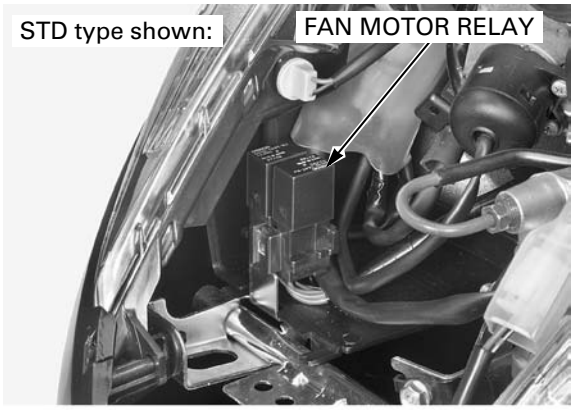

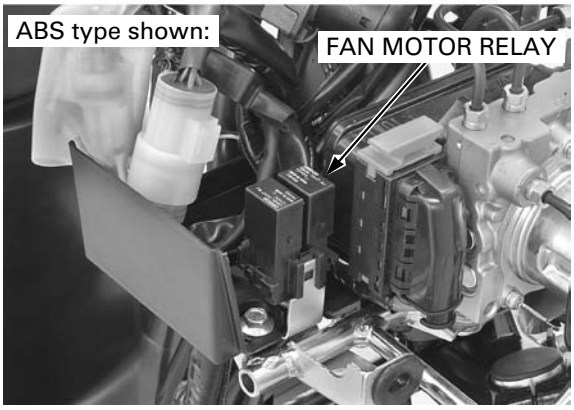

MAIN RELAY

INSPECTION

All lighting system does not operate

Turn the ignition switch OFF.

Remove the main relay (page 22-26).

Measure the voltage between the relay connector terminal of the wire harness side and ground.

Connection: Red/Black (+) – Ground (–)

If the battery voltage does not appear, inspect the open circuit in Red/Black wire between the ignition switch and main relay coil line side.

If the battery voltage appears, the main relay coil input voltage line is normal.
Inspect the following:

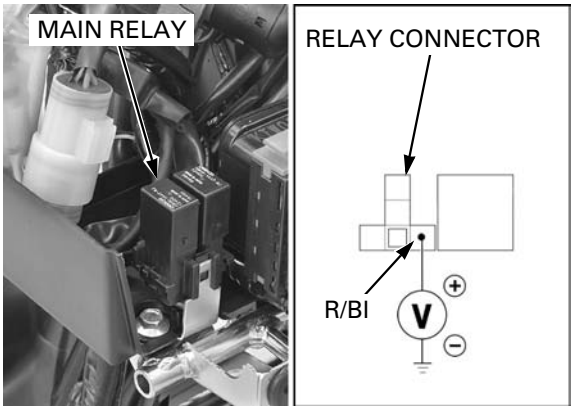

Turn the ignition switch OFF.

Check for continuity between the relay connector and ground.

Connection: Green – Ground

There should be continuity at all times.

If there is no continuity, check for open circuit in Green wire.
If the Green wire is normal, check the following:

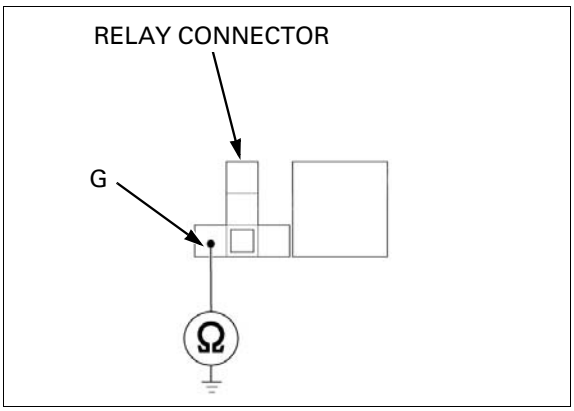

Turn the ignition switch OFF.

Short the relay connector terminals of the wire harness side with a jumper wire.

Connection: Red/Yellow – Red

Remove the maintenance lid (page 3-4).

Disconnect the fuse 10 A.

Turn the ignition switch "ON".

Measure the voltage between the fuse box terminal connector of the wire harness side and ground.

Connection: Red/Yellow (+) – Ground (–)

If the battery voltage appears, the main relay switch line is normal.
Inspect the main relay function test (page 22-25).

If the battery voltage does not appear, inspect the following:

- Open circuit in Red wire between the main fuse and main relay switch line side
- Open circuit in Red/Yellow wire between the main relay and fuse box

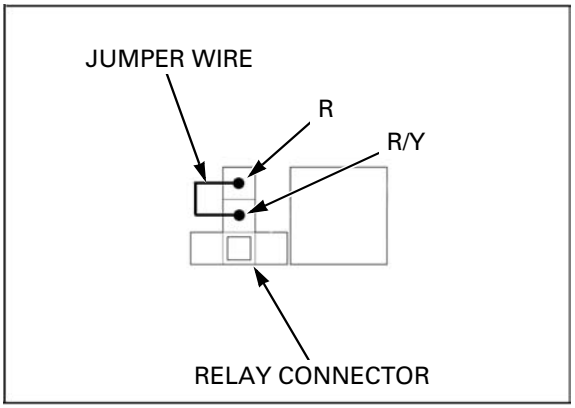

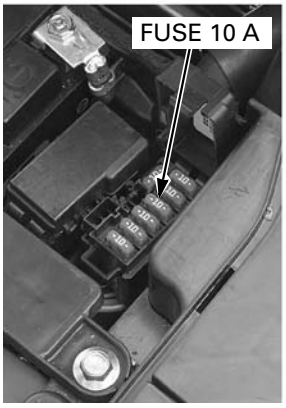

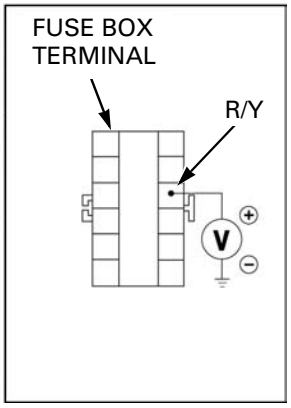

FUNCTION TEST

Remove the main relay (page 22-26).

Connect an ohmmeter to the switching side relay terminals.

CONNECTION: A – B

Connect a 12 V battery to the coil side relay terminals.

CONNECTION: C (+) – D (–)

There should be continuity while the battery is connected to the relay terminals and there should be no continuity when the battery is disconnected.

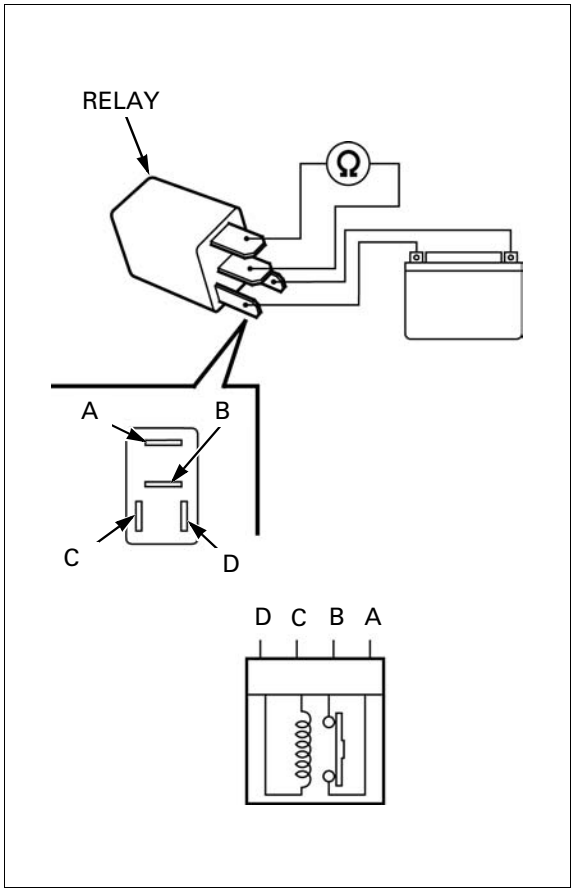

REMOVAL/INSTALLATION

STD type: Remove the front upper cover (page 3-9).

ABS type: Remove the front lower cover (page 3-12).

Remove the main relay from the relay connector.

Installation is in the reverse order of removal.

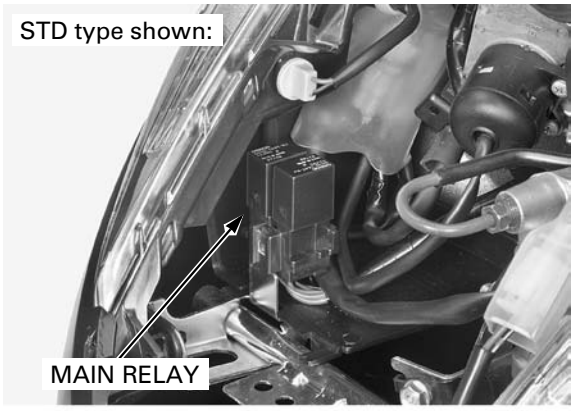

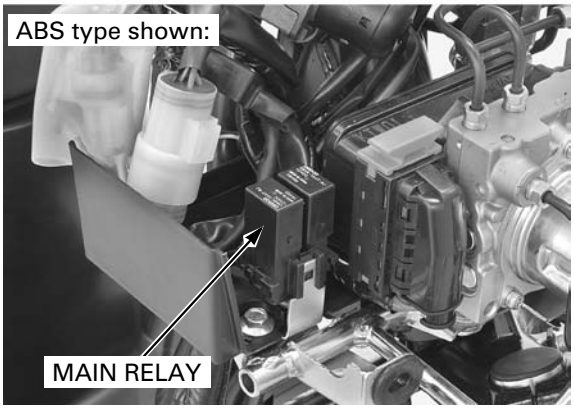

TURN SIGNAL RELAY

INSPECTION

All turn signal lights does not blink

Remove the rear handlebar cover (page 3-14).

Disconnect the 3P connector to remove the turn signal relay.
Check the connector for loose contacts or corroded terminals.

Short the Black/Brown and Gray wire terminals of the 3P connector with a jumper wire.
Turn the ignition switch to ON and check the turn signal lights by operating the turn signal switch.

- If the light does not come on, check for an open circuit in the Black/Brown and Gray wires.
- If the light comes on, check for open circuit in the Green wire. If it is OK, replace the relay.

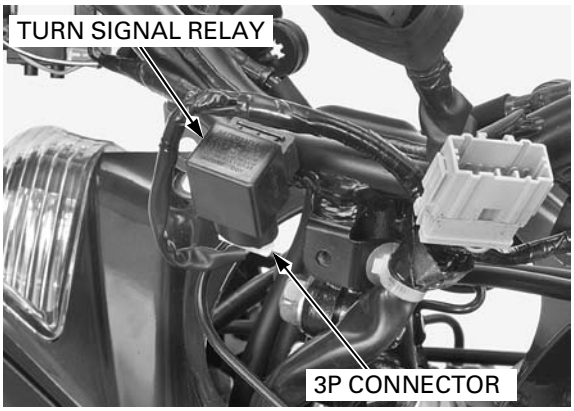

HORN

INSPECTION

Remove the front upper cover (page 3-9).

Disconnect the horn connectors.

Connect a 12V battery to the horn terminals.
The horn is normal if it sounds when the 12V battery is connected across the horn terminals.

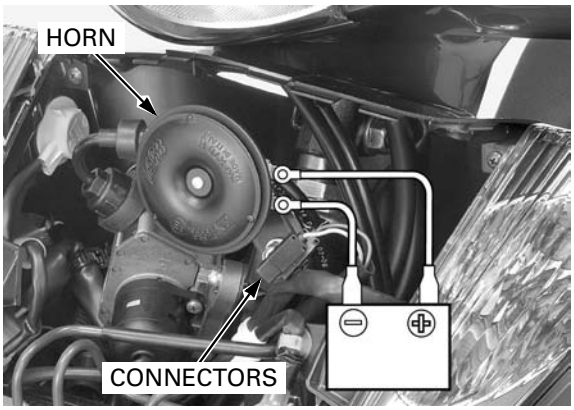

REMOVAL/INSTALLATION

Remove the front upper cover (page 3-9).

Disconnect the horn connectors.
Remove the bolt and horn.

Installation is in the reverse order of removal.

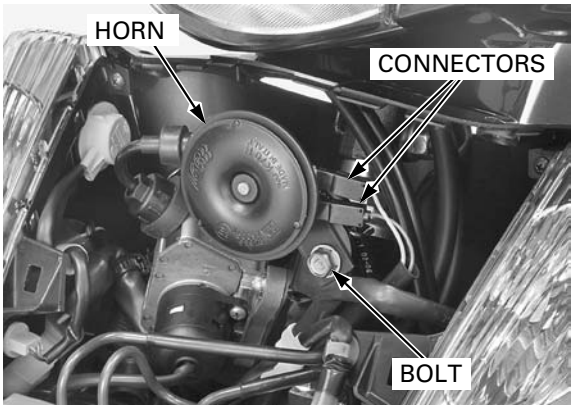

ACCESSORY SOCKET

INSPECTION

ACCESSORY SOCKET DOES NOT OPERATE

Remove the front upper cover (page 3-9).

Disconnect the accessory socket 2P connector.

Turn the ignition switch "ON" and measure the voltage at the accessory socket 2P connector of the wire harness side.

CONNECTION: Black/Yellow (+) – Green (–)

If the battery voltage appears, the accessory socket circuit is normal.
Faulty accessory socket.

If the battery voltage does not appear, inspect the following:

– Open circuit in Black/Yellow wire between the fuse box and accessory socket
– Open circuit in Green wire

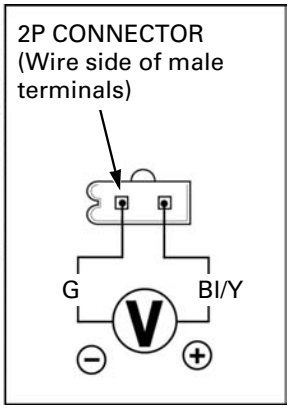

MEMO

23. IMMOBILIZER SYSTEM (HISS)

SYSTEM LOCATION 23-2

SYSTEM DIAGRAM 23-2

SERVICE INFORMATION 23-3

KEY REGISTRATION PROCEDURES 23-4

DIAGNOSTIC CODE INDICATION 23-7

TROUBLESHOOTING 23-9

IMMOBILIZER INDICATOR 23-12

IMMOBILIZER RECEIVER 23-13

SYSTEM LOCATION

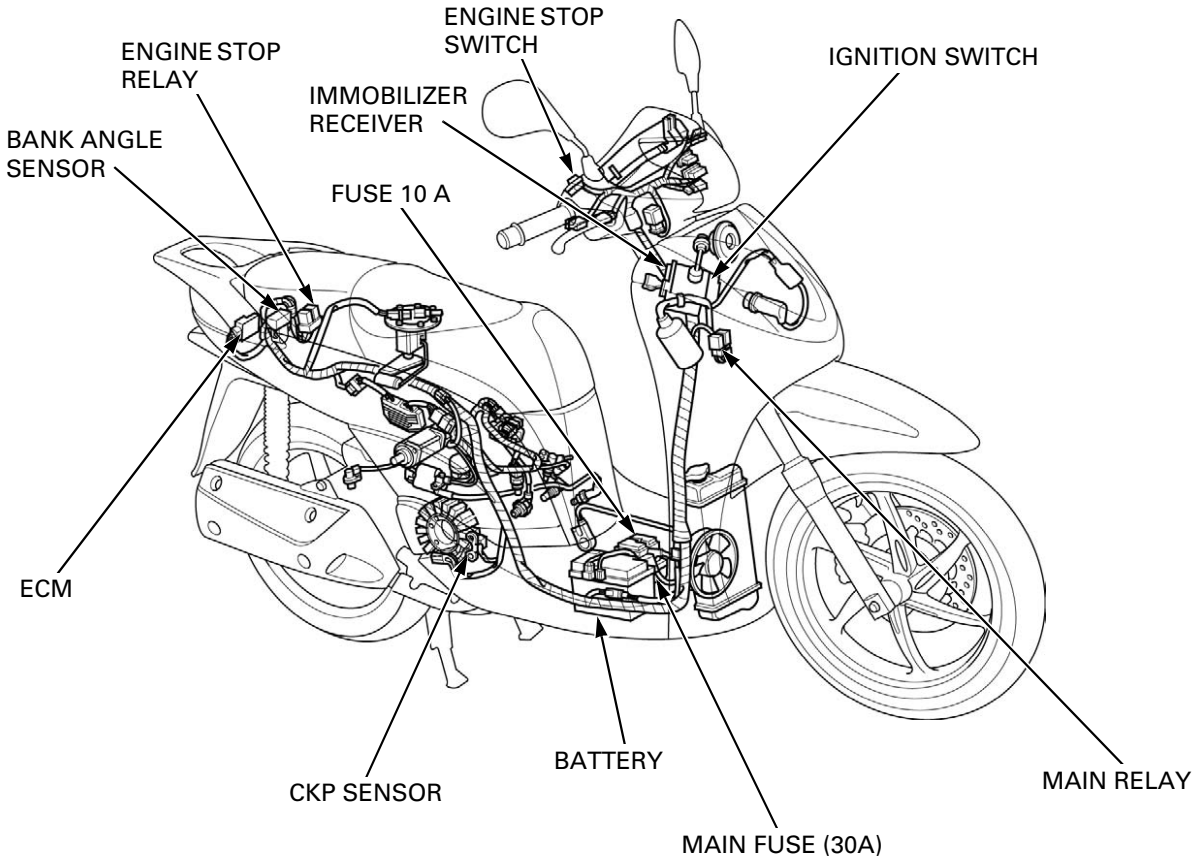

SYSTEM DIAGRAM

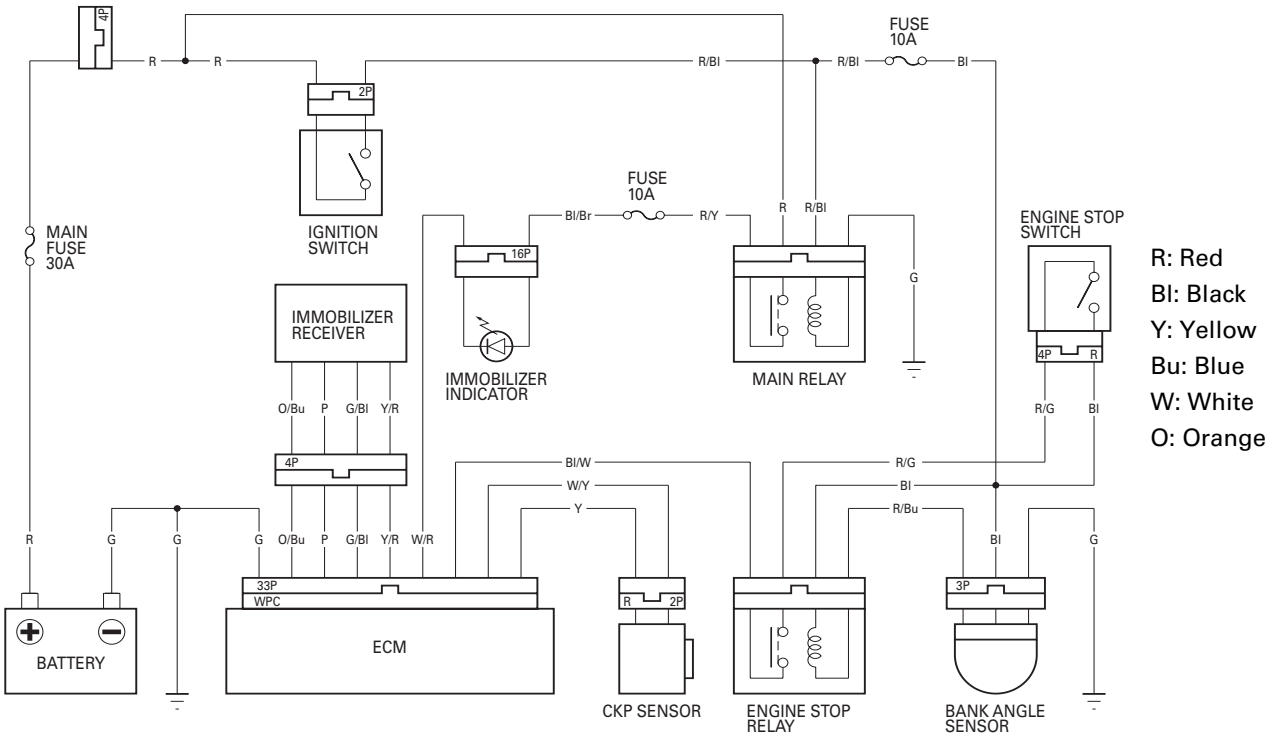

SERVICE INFORMATION

GENERAL

- When checking the immobilizer system (HISS), follow the steps in the troubleshooting flow chart (page 23-9).
- Keep the immobilizer key away from the other vehicle's immobilizer key when using it. The jamming of the key code signal may occur and the proper operation of the system will be obstructed.
- The key has built-in electronic part (transponder). Do not drop and strike the key against a hard material object, and do not leave the key on the dashboard in the car, etc. where the temperature will rise. Do not leave the key in the water for a prolonged time such as by washing the clothes.
- The ECM as well as the transponder keys must be replaced if all transponder keys have been lost.
- The system does not function with a duplicated key code is registered into the transponder with the immobilizer system (HISS).
- The ECM can store up to four key codes. (The four keys can be registered.)
- Do not modify the immobilizer system as it can cause the system failure. (The engine cannot be started.)
- Refer to the ignition system inspection (page 20-5).
- Refer to the ignition switch servicing (page 22-16).

TOOLS

Inspection harness 07XMZ-MBW0101 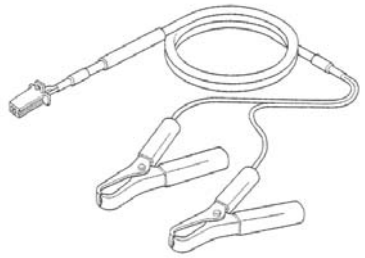	Test probe 07ZAJ-RDJA110 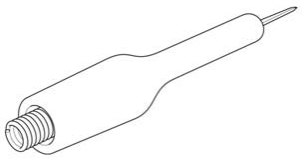

KEY REGISTRATION PROCEDURES

When the key has been lost, or additional spare key is required:

1. Obtain a new transponder key.
2. Grind the key in accordance with the shape of the original key.
3. Apply 12 V battery voltage to the CKP sensor lines of the ECM using the special tool (page 23-7).
4. Turn the ignition switch ON with the original key. The immobilizer indicator comes on and it remains on.

- The code of the original key recognized by the ECM.
- If there is any problem in the immobilizer system (HISS), the system will enter the diagnostic mode and the indicator will remain on for approx. ten seconds, then it will indicate the diagnostic code (page 23-7).

5. Disconnect the red clip of the inspection adaptor from the battery positive (+) terminal for two seconds or more, then connect it again. The indicator remains on for approx. two seconds, then it blinks four times repeatedly.

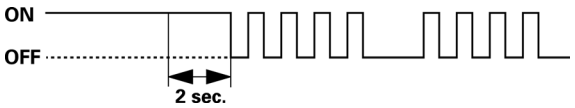

- The immobilizer system (HISS) enters the registration mode. Registrations of all key except the original key inserted in the ignition switch are cancelled. (Registration of the lost key or spare key is cancelled.)

  The spare key must be registered again.

6. Turn the ignition switch OFF and remove the key.
7. Turn the ignition switch ON with a new key or the spare key. (Never use the key registered in previous steps.) The indicator comes on for four seconds then it blinks four times repeatedly.

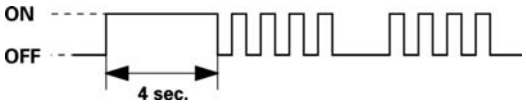

- The new key or spare key is registered in the ECM.
- If there is any problem in the registration, the system will enter the diagnostic mode and the indicator will remain for approx. ten seconds, then it will indicate the diagnostic code (page 23-8).
- Keep the other transponder key away from the immobilizer receiver more than 50 mm (2.0 in).

8. Repeat the steps 6 and 7 when you continuously register the other new key.

   The ECM can store up to four key codes. (The four keys can be registered.)

9. Turn the ignition switch OFF, remove the inspection adaptor and connect the CKP sensor 2P (Red) connector.
10. Turn the ignition switch ON with the registered key.

- The immobilizer system (HISS) returns to the normal mode.

11. Check that the engine can be started using all registered keys.

When the ignition switch is faulty:

1. Obtain a new ignition switch and two new transponder keys.

- Remove the ignition switch (page 22-17).

2. Apply 12 V battery voltage to the CKP sensor lines of the ECM using the special tool (page 23-7).
3. Set the original (registered) key near the immobilizer receiver so that the transponder in the key can communicate with the receiver.
4. Connect a new ignition switch to the wire harness and turn it ON with a new transponder key. (keep the ignition switch away from the receiver.) The immobilizer indicator comes on and it remains on.

- The code of the original key recognized by the ECM.
- If there is any problem in the immobilizer system (HISS), the system will enter the diagnostic mode and the indicator will remain on for approx. ten seconds, then it will indicate the diagnostic code (page 23-7).

5. Disconnect the red clip of the inspection adaptor from the battery positive (+) terminal for two seconds or more, then connect it again. The indicator remains on for approx. two seconds then it blinks four times repeatedly.

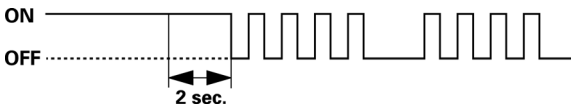

- The immobilizer system (HISS) enters the registration mode. Registrations of all key except the original key set near the receiver are cancelled.

6. Turn the ignition switch OFF and remove the key.

- Install the ignition switch onto the steering stem pipe (page 22-17).

7. Turn the ignition switch ON with a first new key. The indicator comes on for four seconds then it blinks four times repeatedly.

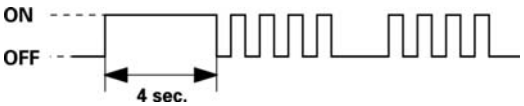

- The first new key is registered in the ECM.
- If there is any problem in the registration, the system will enter the diagnostic mode and the indicator will remain for approx. ten seconds, then it will indicate the diagnostic code (page 23-8).

8. Turn the ignition switch OFF and disconnect the red clip of the inspection adaptor from the battery positive (+) terminal.
9. Turn the ignition switch ON (with the first key registered in step 9). The immobilizer indicator comes on for two seconds then it goes off.

- The immobilizer system (HISS) returns to the normal mode.

10. Turn the ignition switch OFF and connect the red clip of the inspection adaptor to the battery positive (+) terminal.
11. Turn the ignition switch ON (with the first key registered in step 9). The immobilizer indicator comes on and it remains on.

- The code of the first key is recognized by the ECM.
- If there is any problem in the immobilizer system (HISS), the system will enter the diagnostic mode and the indicator will remain on for approx. ten seconds, then it will indicate the diagnostic code (page 23-7).

12. Disconnect the red clip of the inspection adaptor from the battery positive (+) terminal for two seconds or more, then connect it again. The indicator remains on for approx. two seconds then it blinks four times repeatedly.

- The immobilizer system (HISS) enters the registration mode. Registration of the original key used in step 4 is cancelled.

13. Turn the ignition switch OFF and remove the key.
14. Turn the ignition switch ON with a second new key. (Never use the key registered in previous step.) The indicator comes on for four seconds then it blinks four times repeatedly.

- The second new key is registered in the ECM.
- If there is any problem in the registration, the system will enter the diagnostic mode and the indicator will remain for approx. ten seconds, then it will indicate the diagnostic code (page 23-7).
- Keep the other transponder key away from the immobilizer receiver more than 50 mm (2.0 in).

15. Repeat the steps 15 and 16 when you continuously register the other new key.

    The ECM can store up to four key codes. (The four keys can be registered.)
16. Turn the ignition switch OFF, remove the inspection adaptor and connect the CKP sensor connector.
17. Turn the ignition switch ON with the registered key.

- The immobilizer system (HISS) returns to the normal mode.

18. Check that the engine can be started using all registered keys.

When all keys have been lost, or the Engine Control Module (ECM) is faulty:

1. Obtain a new ECM and two new transponder keys.
2. Grind the keys in accordance with the shape of the original key (or use the key number plate when all keys have been lost).

- Replace the ECM with a new one.

3. Turn the ignition switch ON with a first new key. The immobilizer indicator comes on for two seconds, then it blinks four times repeatedly.

- The first key is registered in the ECM.
- If there is any problem in the registration, the system will enter the diagnostic mode and the indicator will remain for approx. ten seconds, then it will indicate the diagnostic code (page 23-8).

4. Turn the ignition switch OFF and remove the first key.
5. Turn the ignition switch ON with a second new key. The immobilizer indicator comes on for two seconds, then it blinks four times repeatedly.

- The second key is registered in the ECM.
- If there is any problem in the registration, the system will enter the diagnostic mode and the indicator will remain for approx. ten seconds, then it will indicate the diagnostic code (page 23-8).

6. Turn the ignition switch OFF and remove the second key.

- The system (ECM) will not enter the normal mode unless the two keys are registered in ECM.
- The third new key cannot be continuously registered. When it is necessary to register the third key, follow the procedures "When the key has been lost, or additional key is required" (page 23-4).

7. Check that the engine can be started using all registered keys.

DIAGNOSTIC CODE INDICATION

Disconnect the CKP sensor 2P (Red) connector.

Connect the inspection harness to the wire harness side connector.
Connect the red clip of the adaptor to the 12 V battery positive (+) terminal and green clip to the negative (–) terminal.

TOOLS:
Inspection harness **07XMZ-MBW0101**

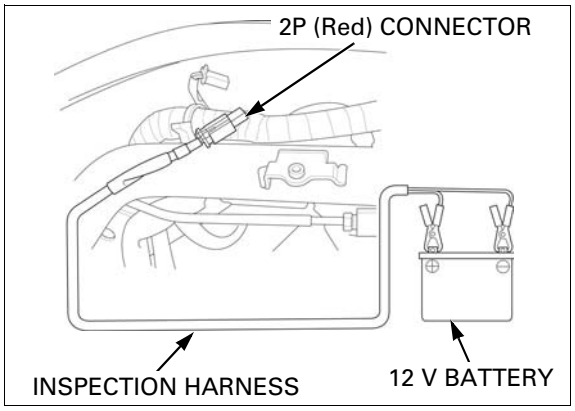

Turn the ignition switch ON with the properly registered key.
The immobilizer indicator will come on for approx. ten seconds then it will start blinking to indicate the diagnostic code if the system is abnormal.
The blinking frequency is repeated.

The immobilizer indicator remains on when the system is normal. (The system is in the normal mode and the diagnostic code does not appear.)

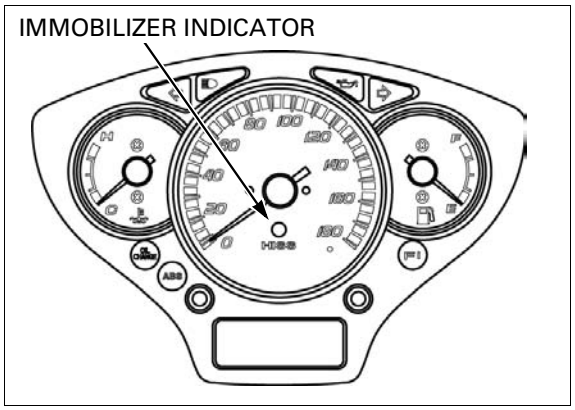

DIAGNOSTIC CODE

When the system (ECM) enters the diagnostic mode from the normal mode:

BLINKING PATTERN	SYMPTOM	PROBLEM	PROCEDURE
ON OFF 10 sec.	ECM data is abnormal	Faulty ECM	Replace the ECM
	Code signals cannot send or receive	Faulty immobilizer receiver or wire harness	Follow the troubleshooting (page 23-9)
	Identification code is disagree	Jamming by the other transponder	Keep the other vehicle's transponder key away from the immobilizer receiver more than 50 mm (2.0 in)
	Secret code is disagree		

When the system (ECM) enters the diagnostic mode from the registration mode:

BLINKING PATTERN	SYMPTOM	PROBLEM	PROCEDURE
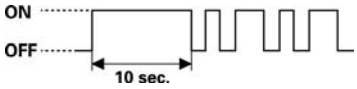	Registration is overlapped	The key is already registered properly	Use a new key or cancelled key
	Code signals cannot send or receive	Communication fails	Follow the trouble-shooting (page 23-9)
	Registration is impossible	The key is already registered on the other system	Use a new key

TROUBLESHOOTING

The immobilizer indicator comes on for approx. two seconds then it goes off, when the ignition switch is turned ON with the properly registered key and the immobilizer system (HISS) functions normally. If there is any problem or the properly registered key is not used, the indicator will remains on.

Immobilizer indicator does not come on when the ignition switch is turned ON

1. **Fuse Inspection**

   Check for blown fuse (10 A).

   Is the fuse blow?

   YES – Replace the fuse

   NO – GO TO STEP 2.

2. **Combination Meter Inspection**

   Check that the oil pressure indicator comes on with the ignition switch ON.

   Does the indicator come on?

   YES – GO TO STEP 4.

   NO – GO TO STEP 3.

3. **Combination Meter Power Input line Inspection**

   Check the power input line (Black/Brown wire) at the combination meter connector (page 22-8).

   Is the voltage specified value?

   YES – Faulty combination meter

   NO –
   - Open circuit in Black/Brown wire
   - Open circuit in Green wire

4. **Immobilizer Indicator Line Inspection At The ECM Connector**

   Check the immobilizer indicator line (White/Red wire) at the ECM connector (page 23-12).

   Is the voltage specified?

   YES – GO TO STEP 6.

   NO – GO TO STEP 5.

5. **Immobilizer Indicator Line Inspection At The Combination Meter Connector**

   Check the immobilizer indicator line (White/Red wire) at the combination meter connector (page 23-12).

   Is the voltage specified value?

   YES – Faulty combination meter

   NO – Open circuit in White/Red wire

6. **ECM Power/Ground Line Inspection**

   You should hear the IACV and fuel pump hum when the ignition switch ON.

   Is the hum heard?

   YES – Replace the ECM with a new one, and recheck

   NO – Inspect the ECM power/Ground line (page 6-65)

Immobilizer indicator remains on with the ignition switch ON

1. **Immobilizer Receiver Jamming Inspection**

   Check that there is any metal obstruction or the other vehicle's transponder key near the immobilizer receiver and key.

   Is there any metal obstruction or the other key?

   YES – Remove it and recheck.

   NO – GO TO STEP 2.

2. **First Transponder Key Inspection**

   Turn the ignition switch ON with the spare transponder key and check the immobilizer indicator. The indicator should come on for 2 seconds then go off.

   Is there indicator go off?

   YES – Faulty first transponder key

   NO – GO TO STEP 3.

3. **Diagnostic Code Inspection**

   Perform the diagnostic code indication procedure (page 23-7) and check that the immobilizer indicator comes on then it starts blinking.

   Is there indicator Blinks or Stay Lit?

   BLINKS–Read the diagnostic code (page 23-7).

   STAY LIT–GO TO STEP 4.

4. **Immobilizer indicator Line Inspection At The ECM Connector**

   Check the immobilizer indicator line (White/Red wire) at the ECM 33P connector (page 23-12).

   Is the voltage specified?

   YES – Replace the ECM with a new one, and recheck

   NO – Short circuit in White/Red wire.

Diagnostic code **is indicated (Code signals cannot send or receive)**

1. **Immobilizer Receiver Power Input Line Inspection**

   Check the power input line (Yellow/Red) at the immobilizer receiver connector (page 23-13).

   Is there approx. 5 V?

   YES – GO TO STEP 2.

   NO – Open or short circuit in Yellow/Red wire

2. **Immobilizer Receiver Ground Line Inspection**

   Check the ground line (Green/Black) at the immobilizer receiver connector (page 23-13).

   Is there continuity?

   NO – Open circuit in Green/Black wire

   YES – GO TO STEP 3.

3. **Immobilizer Receiver Signal Line Inspection**

   Check the signal lines (Pink and Orange/Blue) between the immobilizer receiver and ECM connectors (page 23-13).

   Is the diagnostic* code** ***?

   YES – GO TO STEP 4.

   NO –
   - Open or short circuit in Pink wire
   - Open or short circuit in Orange/Blue wire

4. **Immobilizer Receiver Inspection**

   Replace the immobilizer receiver with a known good one and check the diagnostic code.

   Is the diagnostic* code** ***?

   YES – Replace the ECM with a new one, and recheck

   NO – Faulty original immobilizer receiver

IMMOBILIZER INDICATOR

INSPECTION

Check the combination meter initial function (page 22-8).

If the all needles show initial functions but immobilizer indicator does not stay on, check the following:

Remove the rear fender A (page 3-7).

Disconnect the ECM 33P connector.

Turn the ignition switch ON and measure the voltage between the ECM connector of the wire harness side and ground.

TOOL:
Test probe **07ZAJ-RDJA110**

CONNECTION: White/Red (+) – Ground (–)

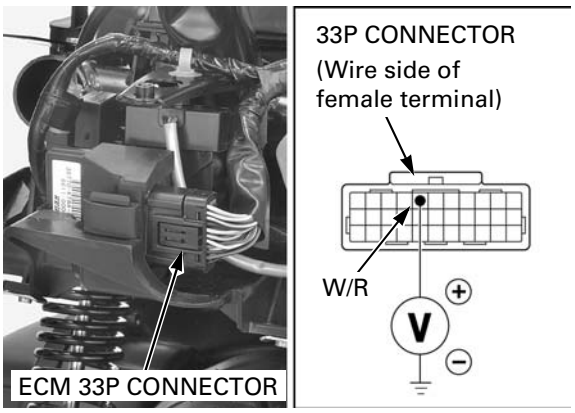

If there is battery voltage, immobilizer indicator line is normal.

If there is no voltage, check the following:

Remove the front handlebar cover (page 3-14).
Disconnect the combination meter 16P connector.

Check for continuity between the ECM connector and combination meter connector of the wire harness side.

TOOL:
Test probe **07ZAJ-RDJA110**

CONNECTION: White/Red – White/Red

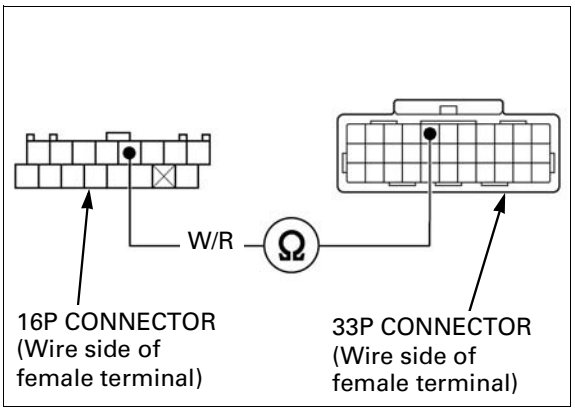

If there is no continuity, open circuit in White/Red wire between the combination meter and ECM.

There should be continuity, check the following.

Check for continuity between the ECM connector and ground with combination meter connector disconnected.

TOOL:
Test probe **07ZAJ-RDJA110**

CONNECTION: White/Red – Ground

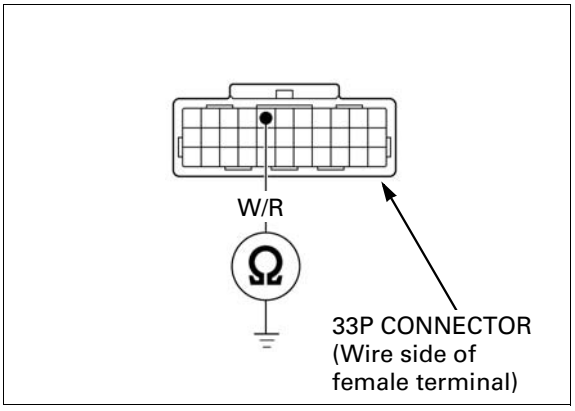

If there is continuity, there is short circuit in White/Red wire.

If there is no continuity, replace the meter circuit of the combination meter with a new one and recheck.

IMMOBILIZER RECEIVER

POWER INPUT LINE INSPECTION

Remove the front inner cover (page 3-10).

Disconnect the immobilizer receiver 4P connector.

Measure the voltage between the Yellow/red wire terminal (+) of the wire harness side connector and ground (–).
Turn the ignition switch ON.

There should be approx. 5 V.

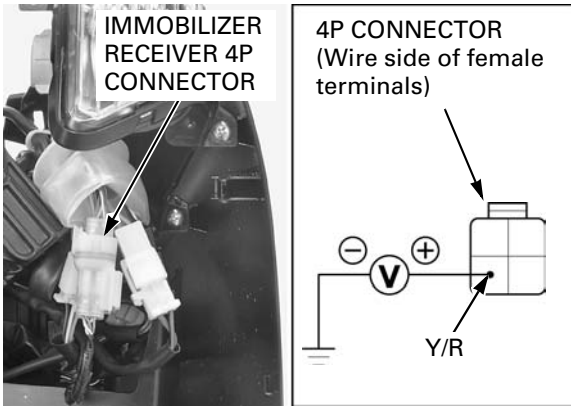

GROUND LINE INSPECTION

Remove the front inner cover (page 3-10).

Disconnect the immobilizer receiver 4P connector.

Check for continuity between the Green/Black wire terminal (+) of the wire harness side connector and ground (–).

There should be continuity at all time.

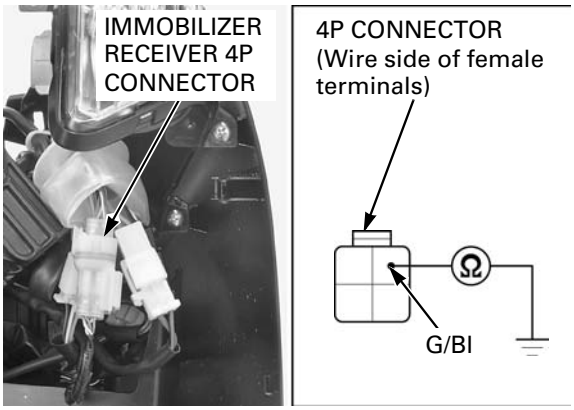

SIGNAL LINE INSPECTION

Measure the voltage between the Pink wire terminal (+) of the wire harness side connector and body ground (–).
Turn the ignition switch ON.

There should be approx. 5 V.

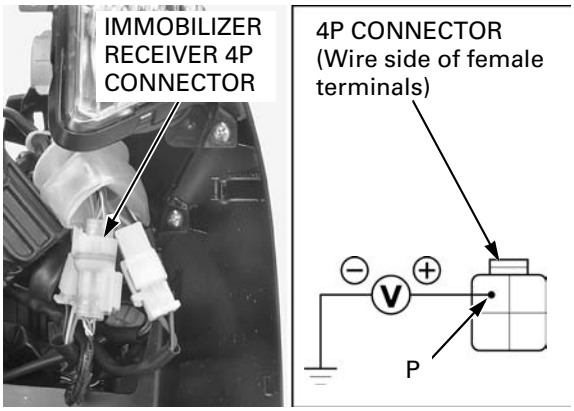

Disconnect the ECM 33P connector (page 23-12).

Check the Orange/Blue wire for continuity between the immobilizer receiver and ECM connectors.

TOOLS:
Test probe **07ZAJ-RDJA110**

There should be continuity.

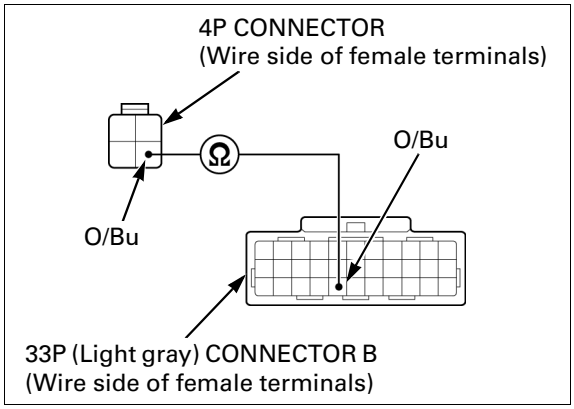

Check for continuity between the Orange/Blue wire terminal and ground.

There should be no continuity.

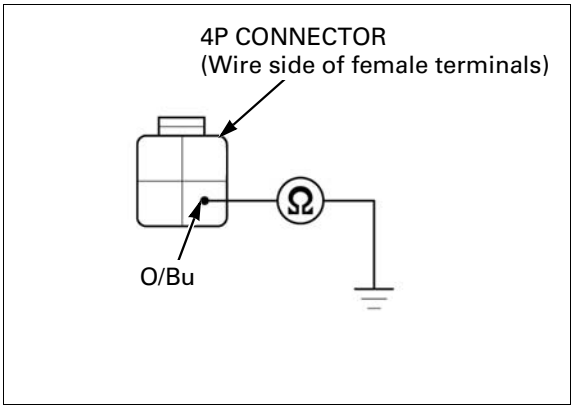

REPLACEMENT

Remove the front inner cover (page 3-10).

Disconnect the immobilizer receiver 4P connector
Remove the two screws and immobilizer receiver.
Install new receiver and tighten the two screws.

Install the removed parts in the reverse order of removal.

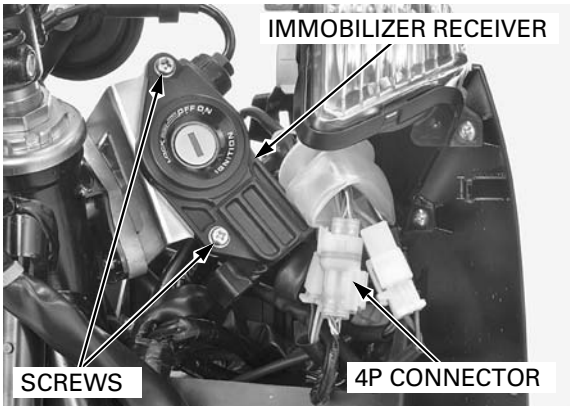

REPLACEMENT PARTS FOR PROBLEM

Problem	Replacement parts			
	Transponder Key	Immobilizer receiver	ECM	Ignition switch
One Key has been lost, or additional spare key is required	○			
All key have been lost, or ECM is faulty	○		○	
Immobilizer receiver is faulty		○		
Ignition switch is faulty	○			○

24. WIRING DIAGRAMS

STD type: ····· **24-3**

ABS type: ····· **24-4**

STD type:

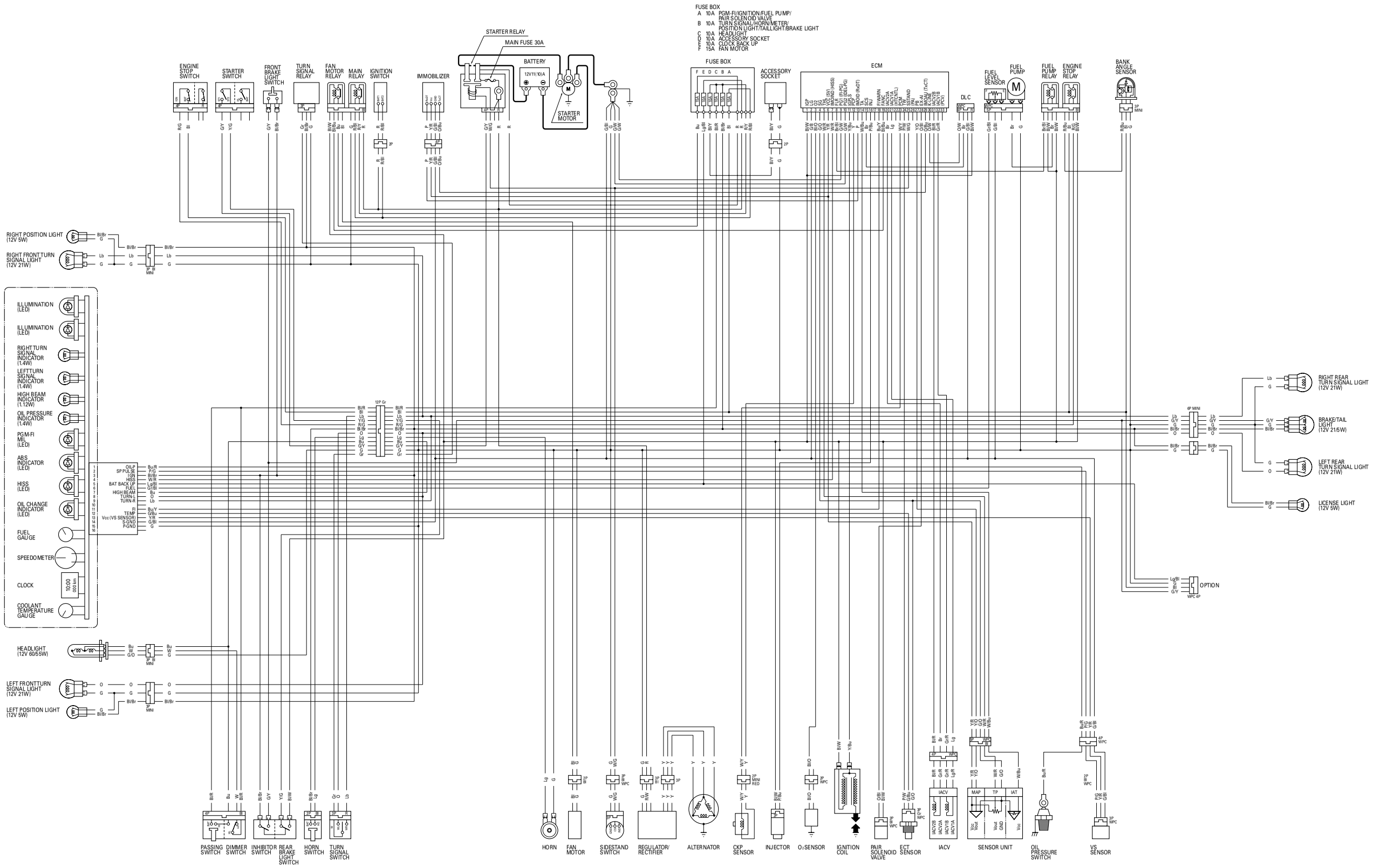

HORN SWITCH		
	HO	BAT
FREE		
PUSH	○	○
COLOR	Lg	Bl/Br

IGNITION SWITCH		
	BAT1	BAT2
LOCK		
OFF		
ON	○	○
COLOR	R	R/Bl

TURN SIGNAL SWITCH			
	W	WL	WR
R	○		○
N			
L	○	○	
COLOR	Gr	O	Lb

DIMMER SWITCH			
	HI	LO	HL
LO		○	○
N	○	○	○
HI	○		○
COLOR	Bu	W	Bl/R

PASSING SWITCH		
	HI	BAT
FREE		
PUSH	○	○
COLOR	Bu	Bl/R

STARTER SWITCH		
	ST1	ST2
FREE		
PUSH	○	○
COLOR	G/Y	Y/G

ENGINE STOP SWITCH		
	BAT	IGN
	○	○
COLOR	Bl	R/G

SIDESTAND SWITCH		
	CS	GND
DOWN		
UP	○	○
COLOR	W/G	G

Bl	BLACK	Br	BROWN
Y	YELLOW	O	ORANGE
Bu	BLUE	Lb	LIGHT BLUE
G	GREEN	Lg	LIGHT GREEN
R	RED	P	PINK
W	WHITE	Gr	GRAY

COLOR COMB : GROUND/MARKING

0030Z-KTW-9000

ABS type:

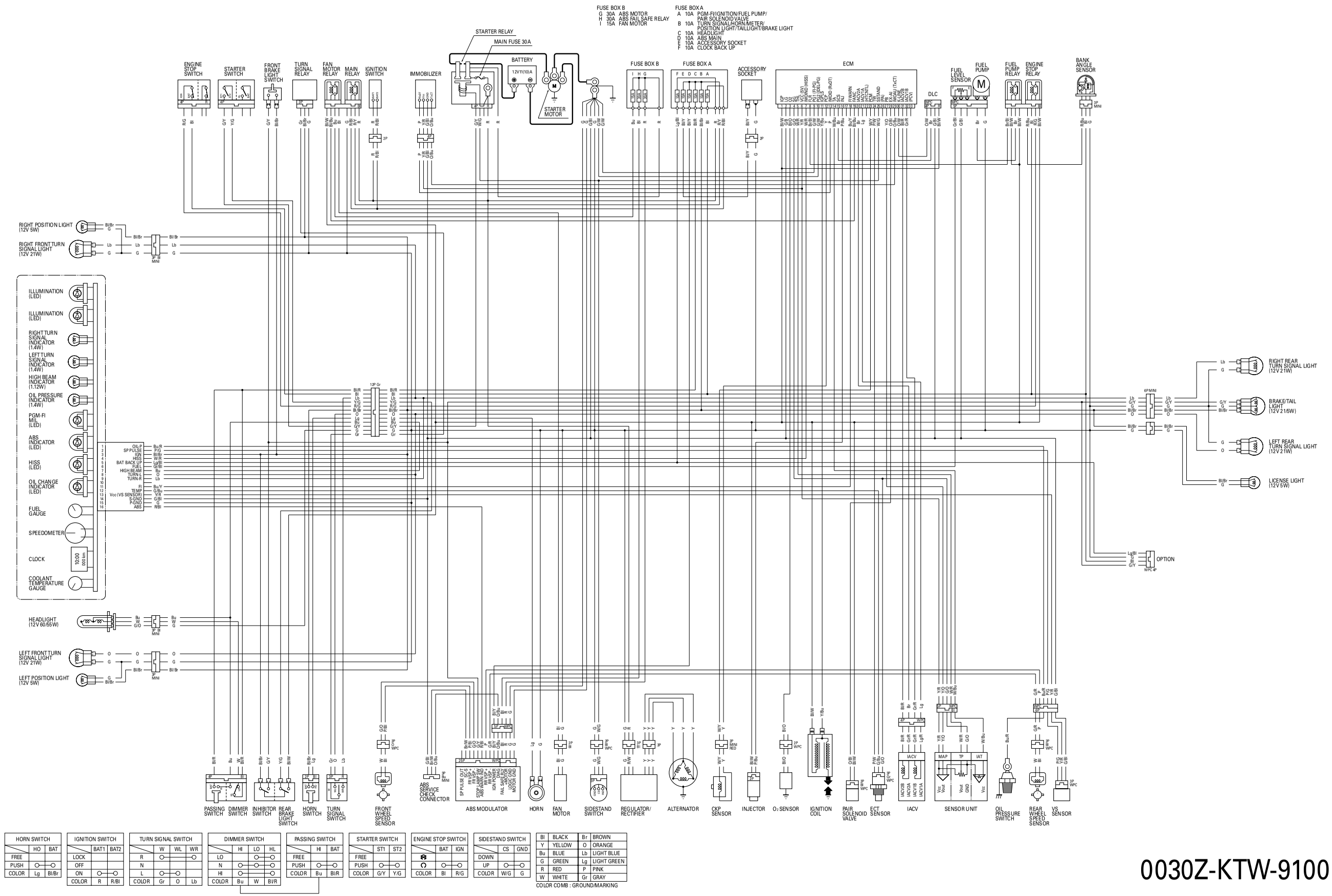

0030Z-KTW-9100

25. TROUBLESHOOTING

ENGINE DOES NOT START OR IS HARD TO START 25-2

ENGINE LACKS POWER 25-3

POOR PERFORMANCE AT LOW AND IDLE SPEED 25-5

POOR PERFORMANCE AT HIGH SPEED 25-6

POOR HANDLING 25-7

ENGINE DOES NOT START OR IS HARD TO START

1. **Spark Plug Inspection**

   Remove and inspect spark plug.

   Is spark plug in good condition?

   YES – GO TO STEP 2.

   NO –
   - Plug not serviced frequently enough
   - Incorrect spark plug heat range
   - Incorrect spark plug gap
   - Dirty air cleaner element

2. **Spark Test**

   Perform spark test.

   Is there weak or no spark?

   YES –
   - Faulty spark plug
   - Fouled spark plug
   - Opened or shorted spark plug wire
   - Broken spark plug cap
   - Broken or shorted ignition coil
   - Faulty CKP sensor
   - Loose or disconnected ignition system wires
   - Faulty ECM

   NO – GO TO STEP 3.

3. **Fuel Pump Inspection**

   You should hear the pump hum when the ignition switch is turned "ON".

   Is the hum heard?

   YES – GO TO STEP 4.

   NO –
   - Broken fuel pump wire
   - Faulty fuel pump

4. **Cylinder Compression Inspection**

   Test the cylinder compression.

   Is the compression within specification?

   YES – GO TO STEP 5.

   NO –
   - Valve stuck open
   - Worn cylinder and piston rings
   - Damaged cylinder head gasket
   - Seized valve
   - Incorrect valve seat contact
   - Improper valve timing

5. **Fuel Flow Inspection**

   Inspect the fuel flow (page 6-48).

   Is the fuel flow within specification?

   YES – GO TO STEP 6.

   NO –
   - Clogged fuel feed hose
   - Faulty fuel pump

6. **Engine Start Condition**

   Start the engine by following the normal procedure.

   Does the engine start but then stops?

   YES –
   - Inlet pipe leaking
   - Improper ignition timing (faulty ECM or CKP sensor)
   - Contaminated fuel
   - Clogged IACV passage

ENGINE LACKS POWER

1. **Engine Oil Inspection**

   Check the oil level and condition.

   Is the oil level correct and the oil in good condition?

   YES – GO TO STEP 2.

   NO –
   - Oil level too high
   - Oil level too low
   - Contaminated oil

2. **Wheel Inspection**

   Raise the rear wheel off the ground and spin it by hand.

   Does the wheel spin freely?

   YES – GO TO STEP 3.

   NO –
   - Brake dragging
   - Worn or damaged final reduction and driven pulley bearings
   - Bent final gear shaft

3. **Tire Pressure Inspection**

   Check the tire pressure.

   Is the tire pressure correct?

   YES – GO TO STEP 4.

   NO –
   - Faulty tire valve
   - Punctured tire

4. **Spark Plug Inspection**

   Remove and inspect the spark plug.

   Is spark plug in good condition?

   YES – GO TO STEP 5.

   NO –
   - Plug not serviced frequently enough
   - Incorrect spark plug heat range
   - Incorrect spark plug gap
   - Dirty air cleaner element

5. **Ignition Timing Inspection**

   Check the ignition timing.

   Is the ignition timing correct?

   YES – GO TO STEP 6.

   NO –
   - Faulty ECM
   - Faulty CKP sensor
   - Improper valve timing

6. **Cylinder compression Inspection**

   Test the cylinder compression.

   Is the compression within specification?

   YES – GO TO STEP 7.

   NO –
   - Valve stuck open
   - Worn cylinder and piston rings
   - Damaged cylinder head gasket
   - Seized valve
   - Incorrect valve seat contact
   - Improper valve timing

7. Fuel Flow Inspection

Inspect the fuel flow (page 6-48).

Is the fuel flow within specification?

YES – GO TO STEP 8.

NO –
- Clogged fuel feed hose
- Faulty fuel pump

8. Drive Train Inspection

Check the drive train

Is the drive train normal?

YES – GO TO STEP 9.

NO –
- Fouled or faulty drive belt
- Fouled or faulty drive pulley
- Fouled or faulty driven pulley
- Worn clutch shoes

9. Overheating Inspection

Check for engine overheating.

Is the engine overheating?

YES –
- Coolant level too low
- Faulty cooling fan
- Thermostat stuck closed
- Excessive carbon build-up in combustion chamber
- Use of poor quality fuel
- Lean fuel mixture

NO – GO TO STEP 10.

10. Engine Knocking Inspection

Accelerate or run at high speed.

Is the engine knocking?

YES –
- Worn piston and cylinder
- Wrong type of fuel
- Excessive carbon build-up in combustion chamber
- Ignition timing too advanced (faulty ECM)
- Lean fuel mixture

NO – GO TO STEP 11.

11. Cam sprocket Inspection

Check the cam sprocket installation.

Is the cam sprocket installed correctly?

YES – Perform the TP sensor reset procedure (page 6-58).

NO – Cam sprocket not installed properly

POOR PERFORMANCE AT LOW AND IDLE SPEED

1. **Inlet Pipe Leaking Inspection**

   Check for leaks at the inlet pipe.

   Does it leak?

   YES – • Loose inlet pipe mounting nut
   • Damaged inlet pipe O-ring

   NO – GO TO STEP 2.

2. **Spark Plug Inspection**

   Remove and inspect the spark plug.

   Is spark plug in good condition?

   YES – GO TO STEP 3.

   NO – • Plug not serviced frequently enough
   • Incorrect spark plug heat range
   • Incorrect spark plug gap
   • Dirty air cleaner element

3. **Spark Test**

   Perform spark test.

   Is there weak or intermittent spark?

   YES – GO TO STEP 4.

   NO – • Faulty spark plug
   • Fouled spark plug
   • Opened or shorted spark plug wire
   • Faulty ignition coil
   • Faulty CKP sensor
   • Faulty ECM

4. **Ignition Timing Inspection**

   Check the ignition timing.

   Is the ignition timing correct?

   YES – GO TO STEP 5.

   NO – • Faulty CKP sensor
   • Faulty ECM

5. **Valve clearance Inspection**

   Check the valve clearance.

   Is the valve clearance correct?

   YES – GO TO STEP 6.

   NO – Improper valve clearance

6. **Cylinder Compression Inspection**

   Test the cylinder compression.

   Is the compression within specification?

   YES – GO TO STEP 7.

   NO – • Valve stuck open
   • Worn cylinder and piston rings
   • Damaged cylinder head gasket
   • Seized valve
   • Incorrect valve seat contact

7. **Fuel Flow Inspection**

   Inspect the fuel flow (page 6-48).

   Is the fuel flow within specification?

   YES – • Perform the TP sensor reset procedure (page 6-58).
   • Clogged IACV passage

   NO – • Clogged fuel feed hose
   • Faulty fuel pump

POOR PERFORMANCE AT HIGH SPEED

1. **Ignition Timing Inspection**

   Check the ignition timing.

   Is the ignition timing correct?

   YES – GO TO STEP 2.

   NO – • Faulty ECM
   • Faulty CKP sensor
   • Improper valve timing

2. **Spark Plug Inspection**

   Remove and inspect the spark plug.

   Is spark plug in good condition?

   YES – GO TO STEP 3.

   NO – • Plug not serviced frequently enough
   • Incorrect spark plug heat range
   • Incorrect spark plug gap
   • Dirty air cleaner element

3. **Fuel Flow Inspection**

   Inspect the fuel flow (page 6-48).

   Is the fuel flow within specification?

   YES – GO TO STEP 4.

   NO – • Clogged fuel feed hose
   • Faulty fuel pump

4. **Cam sprocket Inspection**

   Check the cam sprocket installation.

   Is the cam sprocket installed correctly?

   YES – GO TO STEP 5.

   NO – Cam sprocket not installed properly

5. **Camshaft Inspection**

   Remove and inspect the camshaft.

   Is the cam lobe height within specification?

   YES – GO TO STEP 6.

   NO – Faulty camshaft

6. **Valve Spring Inspection**

   Check the valve springs.

   Is the valve spring free length within specification?

   YES – Perform the TP sensor reset procedure (page 6-58).

   NO – Faulty valve spring

POOR HANDLING

Steering is heavy
- Steering stem adjusting nut too tight
- Damaged steering head bearings
- Low tire pressure

Either wheel is wobbling
- Excessive wheel bearing play
- Faulty tire
- Bent rim
- Excessively worn engine mounting bushings
- Bent frame

The scooter pulls to one side
- Front and rear wheels not aligned
- Faulty shock absorber
- Bent fork
- Bent axle
- Bent frame

MEMO

ABS CONNECTOR LOCATIONS 18-5
ABS INDICATOR PROBLEM CODE INDEX 18-10
ABS MODULATOR 18-27
ABS SYSTEM DIAGRAM 18-3
ABS SYSTEM LOCATION 18-2
ACCESSORY SOCKET 22-27
AIR CLEANER 4-6
AIR CLEANER HOUSING 6-52
ALTERNATOR 19-8
ALTERNATOR/STARTER CLUTCH SPECIFICATIONS 1-9
BANK ANGLE SENSOR 6-72
BATTERY 19-6
BATTERY/CHARGING SYSTEM SPECIFICATIONS 1-11
BEFORE STARTING TROUBLESHOOTING
(ANTI-LOCK BRAKE SYSTEM) 18-7
BELT CASE AIR CLEANER 4-16
BODY COVER 3-6
BODY PANEL LOCATIONS 3-2
BRAKE FLUID 4-18
BRAKE FLUID REPLACEMENT/AIR BLEEDING 17-7
BRAKE LIGHT SWITCH 22-20
BRAKE PAD/DISC 17-13
BRAKE PADS WEAR 4-19
BRAKE SYSTEM 4-19
CABLE & HARNESS ROUTING 1-19
CAMSHAFT/ROCKER ARM INSTALLATION 9-21
CAMSHAFT/ROCKER ARM REMOVAL 9-7
CENTERSTAND 3-16
CHARGING SYSTEM INSPECTION 19-7
CLUTCH SHOES WEAR 4-21
CLUTCH/DRIVEN PULLEY 11-11
COMBINATION METER 22-8
COMPONENT LOCATION
ALTERNATOR/STARTER CLUTCH 13-2
CRANKCASE/CRANKSHAFT 14-2
CYLINDER HEAD/VALVES 9-2
CYLINDER/PISTON 10-2
DRIVE AND DRIVEN PULLEYS/CLUTCH 11-2
ENGINE REMOVAL/INSTALLATION 8-2
FINAL REDUCTION 12-2
FRONT WHEEL/SUSPENSION/STEERING 15-2
FUEL SYSTEM (PGM-FI) 6-2
HYDRAULIC BRAKE 17-2
REAR WHEEL/SUSPENSION 16-2
COOLANT REPLACEMENT 7-6
COOLANT TEMPERATURE GAUGE/ECT SENSOR 22-14
COOLING SYSTEM 4-14
COOLING SYSTEM FLOW PATTERN 7-2
COOLING SYSTEM SPECIFICATIONS 1-7
COOLING SYSTEM TESTING 7-5
CRANKCASE ASSEMBLY 14-14
CRANKCASE BREATHER 4-7
CRANKCASE SEPARATION 14-5
CRANKCASE/CRANKSHAFT SPECIFICATIONS 1-9
CRANKPIN BEARING 14-8
CRANKSHAFT/CONNECTING ROD 14-6
CYLINDER COMPRESSION TEST 9-6
CYLINDER HEAD ASSEMBLY 9-18
CYLINDER HEAD COVER INSTALLATION 9-24
CYLINDER HEAD COVER REMOVAL 9-6
CYLINDER HEAD DISASSEMBLY 9-12
CYLINDER HEAD INSTALLATION 9-19
CYLINDER HEAD REMOVAL 9-11
CYLINDER HEAD/VALVES SPECIFICATIONS 1-8
CYLINDER/PISTON INSPECTION 10-5
CYLINDER/PISTON REMOVAL 10-4
CYLINDER/PISTON SPECIFICATIONS 1-8
DELAY VALVE (ABS TYPE) 17-26
DELAY VALVE (STD TYPE) 17-25
DIAGNOSTIC CODE INDICATION 23-7
DRIVE AND DRIVEN PULLEYS/
CLUTCH SPECIFICATIONS 1-9
DRIVE BELT
DRIVE AND DRIVEN PULLEYS/CLUTCH 11-7
MAINTENANCE 4-15
DRIVE PULLEY 11-8
DTC INDEX 6-15
DTC TROUBLESHOOTING 6-16
ECM 6-65
ECT SENSOR 6-74
ELECTRIC STARTER SPECIFICATION 1-11
EMISSION CONTROL SYSTEMS 1-48
ENGINE & FRAME TORQUE VALUES 1-12
ENGINE DOES NOT START OR IS
HARD TO START 25-2
ENGINE IDLE SPEED 6-77
ENGINE INSTALLATION 8-9
ENGINE LACKS POWER 25-3
ENGINE OIL 4-10
ENGINE OIL FILTER 4-12
ENGINE REMOVAL 8-4
ENGINE STOP RELAY 6-67
EXHAUST PIPE/MUFFLER 3-15
FAN MOTOR RELAY 22-22
FINAL DRIVE OIL 4-17
FINAL REDUCTION ASSEMBLY 12-11
FINAL REDUCTION BEARING REPLACEMENT 12-8
FINAL REDUCTION DISASSEMBLY/INSPECTION 12-6
FINAL REDUCTION SPECIFICATIONS 1-9
FLOOR LOWER COVER 3-9
FLOOR PANEL 3-13
FLOOR SIDE COVER 3-8
FLYWHEEL/STARTER CLUTCH 13-9
FORK 15-12
FRONT BRAKE CALIPER 17-27
FRONT FENDER 3-8
FRONT HANDLEBAR COVER 3-14
FRONT INNER COVER 3-10
FRONT LOWER COVER 3-12
FRONT MASTER CYLINDER 17-16
FRONT TURN SIGNAL/POSITION LIGHT 22-5
FRONT UPPER COVER 3-9
FRONT WHEEL 15-6
FRONT WHEEL SPEED SENSOR 18-23
FRONT WHEEL/SUSPENSION/
STEERING SPECIFICATIONS 1-10
FUEL GAUGE/FUEL LEVEL SENSOR 22-13
FUEL LINE 4-5
FUEL LINE INSPECTION 6-44
FUEL PUMP 6-48
FUEL PUMP RELAY 6-69
FUEL SYSTEM (PGM-FI) SPECIFICATIONS 1-7
FUEL TANK 6-51
GENERAL SPECIFICATIONS 1-5
GRAB RAIL 3-5
HANDLEBAR 15-20
HANDLEBAR SWITCH 22-18
HEADLIGHT 22-4
HEADLIGHT AIM 4-20
HEATER-LESS O2 SENSOR 2-2
HORN 22-27
HYDRAULIC BRAKE SPECIFICATIONS 1-10
IACV 6-77
IGNITION COIL 20-8
IGNITION SWITCH 22-16
IGNITION SYSTEM INSPECTION 20-5
IGNITION SYSTEM SPECIFICATIONS 1-11
IGNITION TIMING 20-8

IMMOBILIZER INDICATOR 23-12
IMMOBILIZER RECEIVER 23-13
INHIBITOR SWITCH 22-19
INJECTOR 6-61
INTAKE PIPE 6-64
KEY REGISTRATION PROCEDURES 23-4
LEFT CRANKCASE COVER 11-5
LICENSE LIGHT 22-7
LIGHTS/METERS/SWITCHES SPECIFICATIONS 1-11
LUBRICATION & SEAL POINTS 1-16
LUBRICATION SYSTEM DIAGRAM 5-2
LUBRICATION SYSTEM SPECIFICATIONS 1-7
LUGGAGE BOX 3-5
MAIN JOURNAL BEARING 14-10
MAIN RELAY 22-24
MAINTENANCE LID 3-4
MAINTENANCE SCHEDULE 4-4
MIL CIRCUIT INSPECTION 6-43
MIL TROUBLESHOOTING 6-31
MODEL IDENTIFICATION 1-3
NUTS, BOLTS, FASTENERS 4-22
O2 SENSOR 6-76
OIL PRESSURE CHECK 5-5
OIL PRESSURE INDICATOR 22-15
OIL PRESSURE RELIEF VALVE 5-7
OIL PUMP 5-8
OIL STRAINER 5-6
PGM-FI CONNECTOR LOCATIONS 6-8
PGM-FI SYMPTOM TROUBLESHOOTING 6-5
PGM-FI SYSTEM DIAGRAM 6-7
PGM-FI SYSTEM LOCATION 6-6
PGM-FI TROUBLESHOOTING INFORMATION 6-10
PISTON/CYLINDER INSTALLATION 10-7
POOR HANDLING 25-7
POOR PERFORMANCE AT HIGH SPEED 25-6
POOR PERFORMANCE AT LOW AND
IDLE SPEED 25-5
RADIATOR 7-13
RADIATOR COOLANT 4-14
RADIATOR COOLING FAN 7-13
RADIATOR RESERVE TANK 7-14
REAR BRAKE CALIPER 17-32
REAR FENDER 3-7
REAR HANDLEBAR COVER 3-14
REAR MASTER CYLINDER 17-21
REAR SHOCK ABSORBER 16-12
REAR TURN SIGNAL/BRAKE/TAILLIGHT 22-6
REAR WHEEL SPEED SENSOR 18-25
REAR WHEEL/SUSPENSION SPECIFICATIONS 1-10
REAR WHEEL/SWINGARM 16-5
REGULATOR/RECTIFIER 19-8
RIGHT CRANKCASE COVER 13-4
SEAT 3-4
SECONDARY AIR SUPPLY SYSTEM
  FUEL SYSTEM 6-78
  MAINTENANCE 4-15
SERVICE INFORMATION
  ABS 18-4
  ALTERNATOR/STARTER CLUTCH 13-3
  BATTERY/CHARGING SYSTEM 19-3
  COOLING SYSTEM 7-3
  CRANKCASE/CRANKSHAFT 14-3
  CYLINDER HEAD/VALVES 9-3
  CYLINDER/PISTON 10-3
  DRIVE AND DRIVEN PULLEYS/CLUTCH 11-3
  ELECTRIC STARTER 21-3
  ENGINE REMOVAL/INSTALLATION 8-3
  FINAL REDUCTION 12-3
  FRAME/BODY PANELS/EXHAUST SYSTEM 3-3
  FRONT WHEEL/SUSPENSION/STEERING 15-3
  FUEL SYSTEM (PGM-FI) 6-3
  HYDRAULIC BRAKE 17-4
  IGNITION SYSTEM 20-3
  IMMOBILIZER SYSTEM (HISS) 23-3
  LIGHTS/METERS/SWITCHES 22-3
  LUBRICATION SYSTEM 5-3
  MAINTENANCE 4-2
  REAR WHEEL/SUSPENSION 16-3
SERVICE RULES 1-2
SIDESTAND
  FRAME/BODY PANELS/EXHAUST SYSTEM 3-16
  MAINTENANCE 4-21
SIDESTAND SWITCH 22-20
SNAP FIT CLIP 3-4
SPARK PLUG 4-7
SPEEDOMETER/VS SENSOR 22-11
STANDARD TORQUE VALUES 1-12
STARTER MOTOR 21-6
STARTER RELAY 21-14
STATOR/CKP SENSOR 13-8
STEERING HEAD BEARINGS 4-24
STEERING STEM 15-27
SUSPENSION 4-21
SYSTEM DIAGRAM
  BATTERY/CHARGING SYSTEM 19-2
  ELECTRIC STARTER 21-2
  IGNITION SYSTEM 20-2
  IMMOBILIZER SYSTEM (HISS) 23-2
SYSTEM LOCATION
  BATTERY/CHARGING SYSTEM 19-2
  ELECTRIC STARTER 21-2
  IGNITION SYSTEM 20-2
  IMMOBILIZER SYSTEM (HISS) 23-2
  LIGHTS/METERS/SWITCHES 22-2
THERMOSTAT 7-9
THROTTLE BODY 6-53
THROTTLE OPERATION 4-5
TROUBLESHOOTING
  ABS 18-11
  ALTERNATOR/STARTER CLUTCH 13-3
  BATTERY/CHARGING SYSTEM 19-5
  COOLING SYSTEM 7-4
  CRANKCASE/CRANKSHAFT 14-4
  CYLINDER HEAD/VALVES 9-5
  CYLINDER/PISTON 10-3
  DRIVE AND DRIVEN PULLEYS/CLUTCH 11-4
  ELECTRIC STARTER 21-4
  FINAL REDUCTION 12-5
  FRAME/BODY PANELS/EXHAUST SYSTEM 3-3
  FRONT WHEEL/SUSPENSION/STEERING 15-5
  HYDRAULIC BRAKE 17-6
  IGNITION SYSTEM 20-4
  IMMOBILIZER SYSTEM (HISS) 23-9
  LUBRICATION SYSTEM 5-4
  REAR WHEEL/SUSPENSION 16-4
TURN SIGNAL RELAY 22-26
UNIT-SWING ENGINE LAYOUT 2-3
VALVE CLEARANCE 4-8
VALVE GUIDE REPLACEMENT 9-14
VALVE SEAT INSPECTION/REFACING 9-15
WATER PUMP 7-10
WHEELS/TIRES 4-22
WIRING DIAGRAMS
  ABS type 24-4
  STD type 24-3